SONY

VIDEOCASSETTE RECORDER

BVU-850P

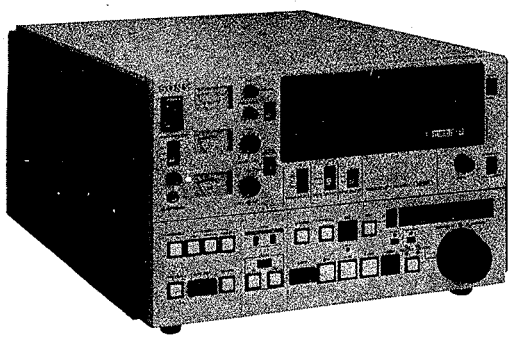

Professional U-matic SP

OPERATION AND MAINTENANCE MANUAL

Volume 2 2nd Edition (Revised 1)

Serial No. 10041 and Higher

ご注意

このマニュアルに記載されている事柄の著作権は当社にあり，説明内容は機器購入者の使用を目的としています。
従って，当社の許可なしに無断で複写したり，説明内容(操作，保守等）と異なる目的で本マニュアルを使用することを禁止します。

CONFIDENTIAL

The material contained in this manual consists of information that is the property of Sony Corporation and is intended solely for use by the purchasers of the equipment described in this manual.
Sony Corporation expressly prohibits the duplication of any portion of this manual or the use thereof for any purpose other than the operation or maintenance of the equipment described in this manual without the express written permission of Sony Corporation.

CONFIDENTIEL

Le matériel contenu dans ce manuel consiste en informations qui sont la propriété de Sony Corporation et sont destinées exclusivement à l'usage des acquéreurs de l'équipement décrit dans ce manuel.
Sony Corporation interdit formellement la copie de quelque partie que ce soit de ce manuel ou son emploi pour tout autre but que des opérations ou entretiens de l'équipement à moins d'une permission écrite de Sony Corporation.

VERTRAULICH

Das in dieser Anleitung enthaltene Material besteht aus Informationen, die Eigentum der Sony Corporation sind, und ausschließlich zum Gebrauch durch den Käufer der in dieser Anleitung beschriebenen Ausrüstung bestimmt sind.
Die Sony Corporation untersagt ausdrücklich die Vervielfältigung jeglicher Teile dieser Anleitung oder den Gebrauch derselben für irgendeinen anderen Zweck als die Bedienung oder Wartung der in dieser Anleitung beschriebenen Ausrüstung ohne ausdrückliche schriftliche Erlaubnis der Sony Corporation.

TABLE OF CONTENTS

15. BLOCK DIAGRAMS

VIDEO Y/C MODULATOR 15-4
RF REC/PB AMPLIFIER 15-7
Y DEMODULATOR 15-10
CHROMA DEMODULATOR 15-13
AUDIO REC/PB AMPLIFIER 15-17
DRUM/CAPSTAN PWM SERVO 15-21
REEL SERVO 15-24
TAPE TENSION SERVO 15-27

16. SEMICONDUCTOR ELECTRODES

Semiconductor Electrodes 16-1

17. SCHEMATIC DIAGRAMS

VIDEO

MD-25 17-6
YC-19 17-11
BC-7, BC-8 17-16
RP-18 17-21
YD-17 17-27
AUD-1, FL-36 17-33
CD-29 17-38
NR-8 17-43

AUDIO

CP-93, CP-92 17-47
AU-62, DUS-71, FL-31 17-52
AU-63 17-62
AO-3, AO-2, HP-5 17-67

SERVO

SV-52A 17-72
CF-9 17-83
RS-3 17-94
RS-4 17-106
PD-14, DR-9, PD-15, PD-17, PD-21, DR-8 17-116

POWER

PW-50, PW-79, FU-16 17-122

KEY

KY-9, KY-14, DP-9, PC-9, PC-14 17-128

TIME CODE

TC-13 17-134

SYSTEM CONTROL

SY-36 17-140
SY-37A 17-154
SY-71, EK-2(B), TM-8 17-166
LP-33, PR-33, MS-5(E), LMP-1 17-171
CC-9, CC-10, CC-11 17-174
RM-4 17-176
RM-35 . . . . . 17-176(a)
TM-14 17-178
RE-3, PC-12, PC-8 17-181

MOTHER BOARD AND OTHER

MB-9, EK-3, EK-2(A), PC-7(B) 17-185
MB-18-1, PC-7(A), PH-1(A), LE-4(A), PH-1(B), LE-4(B), EM-1, TM-4, TC-12, MS-5(A), MS-5(B), MS-5(C), MS-5(D), LV-1 17-191

FRAME

FRAME (1/2) 17-198
FRAME (2/2) 17-205

18. PRINTED CIRCUIT BOARDS

VIDEO

MD-25 18-3
YC-19, BC-7, BC-8 18-7
RP-18 18-11
YD-17 18-15
AUD-1, FL-36 18-19
CD-29, NR-8 18-21

AUDIO

CP-93, CP-92 18-25
AU-62, DUS-71(A), (B), FL-31 18-27
AU-63 18-31
AO-3, AO-2, HP-5 18-35

SERVO

SV-52A 18-39
CF-9 18-43
RS-3 18-47
RS-4 18-51
PD-14, DR-9(1), (2), PD-15(1), (2), PD-17, PD-21, DR-8 18-55

POWER

PW-50, PW-79, FU-16 18-59

KEY

KY-9, KY-14, DP-9, PC-9, PC-14 18-63

TIME CODE

TC-13 18-69

SYSTEM CONTROL

SY-36 18-73
SY-37A 18-77
SY-71, EK-2(B), TM-8 18-81
LP-33, PR-33, MS-5(E), LMP-1 18-85
CC-9, CC-10, CC-11 18-87
RM-4 18-89
RM-35 ..... 18-89(a)
TM-14 18-91
RE-3, PC-12, PC-8 18-93

MOTHER BOARD AND OTHER

MB-9, EK-3, EK-2(A), PC-7(B) 18-95
MB-18-1, PC-7(A), PH-1(A), (B), LE-4(A), (B), EM-1, TM-4, TC-12, MS-5(A), (B), (C), (D), LV-1 18-99

19. SPARE PARTS AND FIXTURE

19-1. Parts Information 19-1
19-2. Exploded View 19-1
Reel Chassis (1) 19-5
Supply Tension Detector Block 19-7
Take-up Tension Detector Block 19-8
Threading Block 19-9
Threading Arm Block 19-11
Pinch Lever Block 19-13
Reel Chassis (bottom view) 19-14
Drum Block 19-15
Cassette-up Compartment Block 19-17
Control Panel Block 19-19
Function Control Panel Block 19-21
Power Chassis Block 19-23
Connector Panel Block (1) 19-25
Connector Panel Block (2) 19-27
Chassis Block 19-28
Ornamental Panel Block (1) 19-29
Ornamental Panel Block (2) 19-31
Printed Circuit Board 19-32
Supplied Accessory 19-33
19-3. Electrical Parts List 19-35
19-4. Packing Material and Accessory (Supplied) . . 19-79
19-5. Fixture 19-79

SECTION 15
BLOCK DIAGRAMS

VIDEO MOD VIDEO

VIDEO Y/C MODULATOR

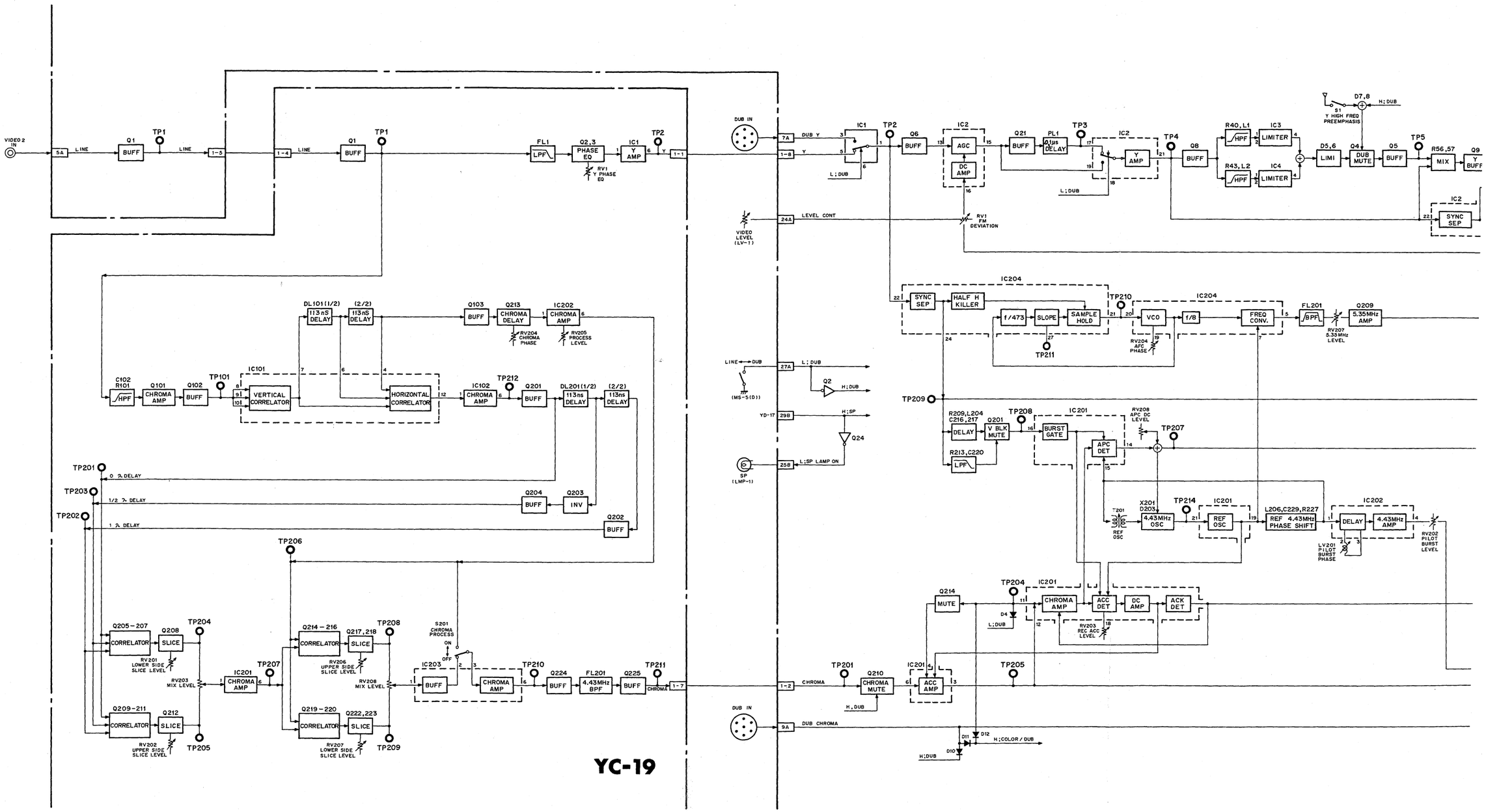

YC-19

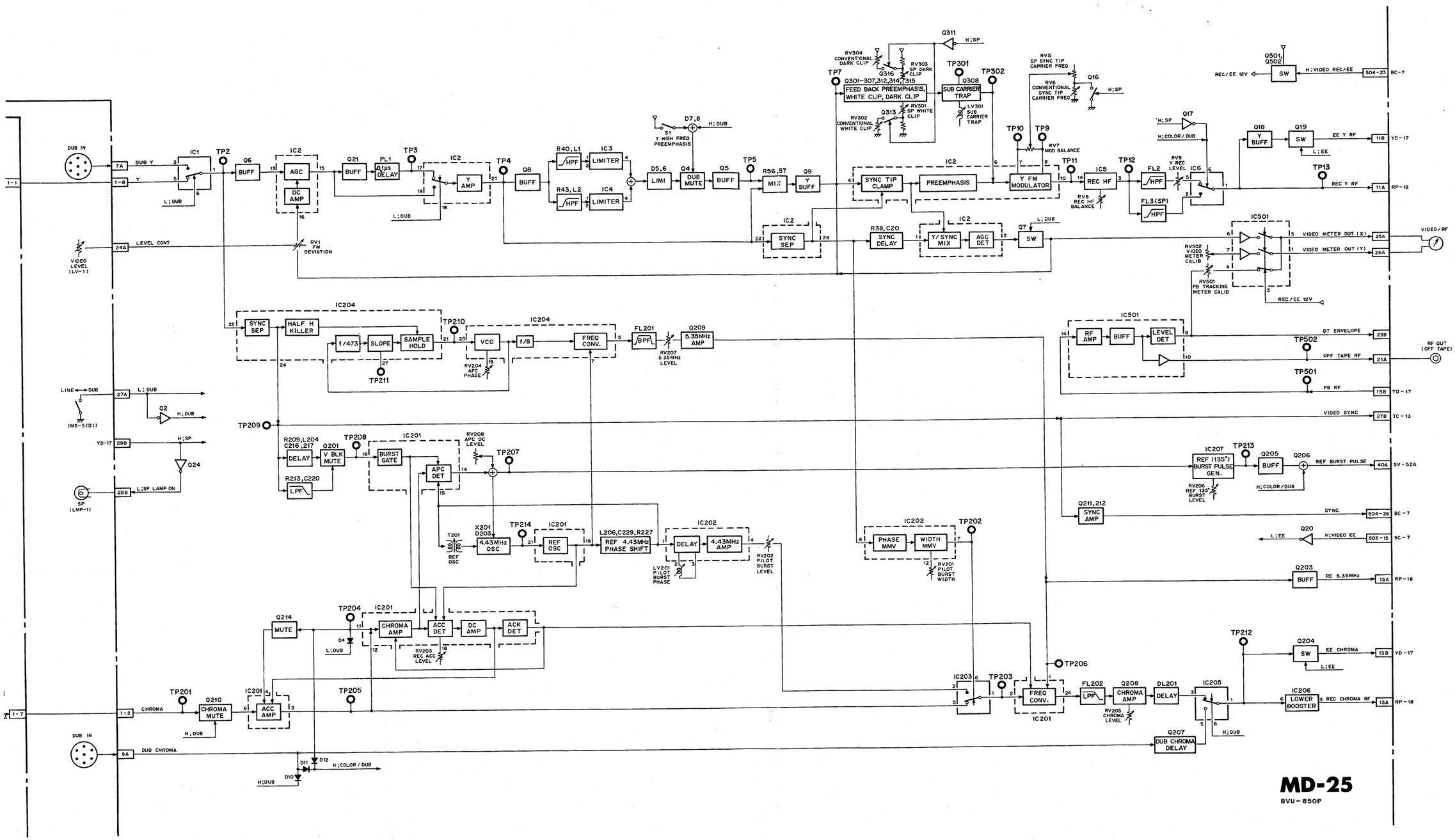

MD-25
8VU-850P

RF REC/PB AMPLIFIER

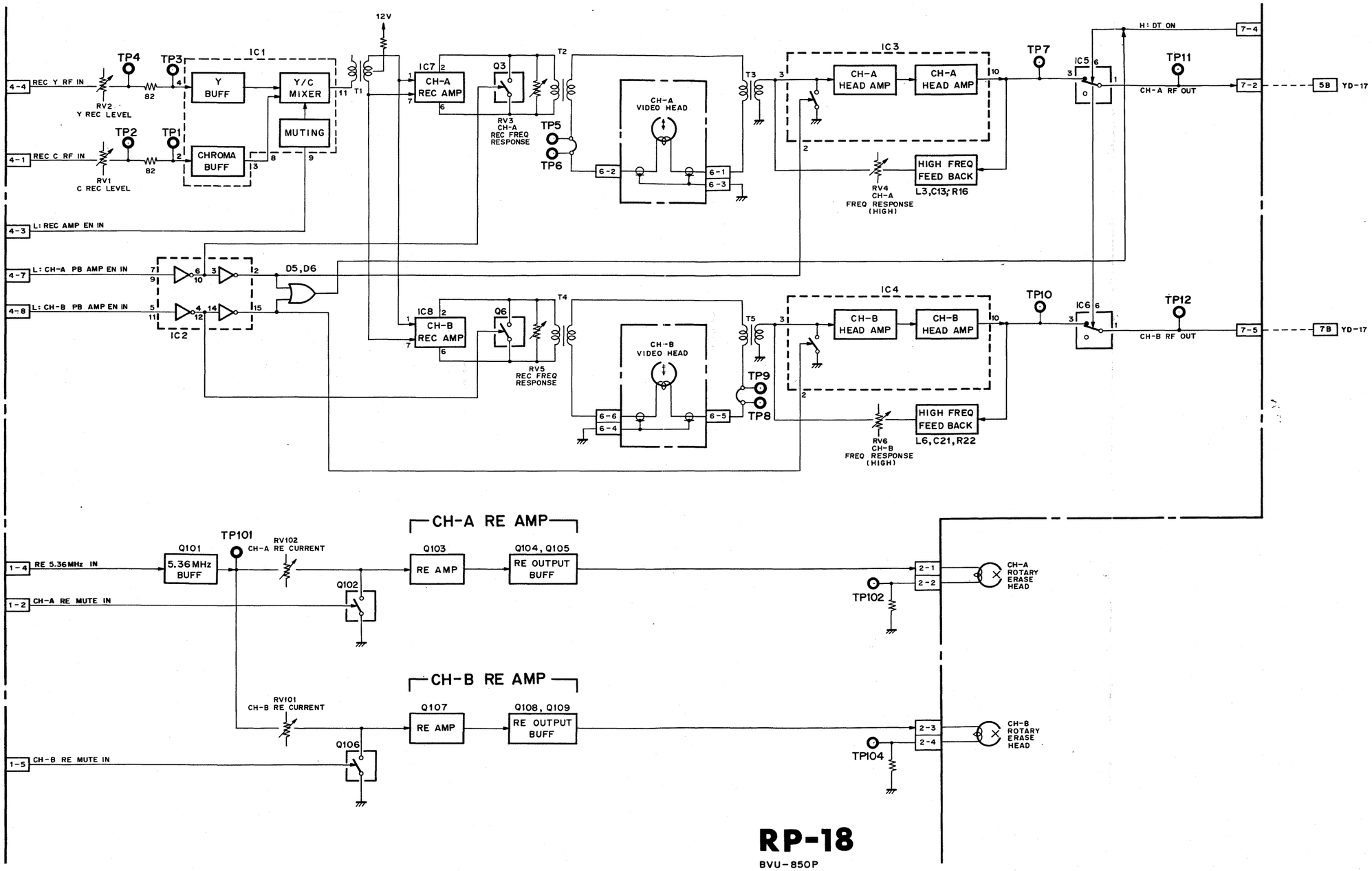

RP-18
BVU-850P

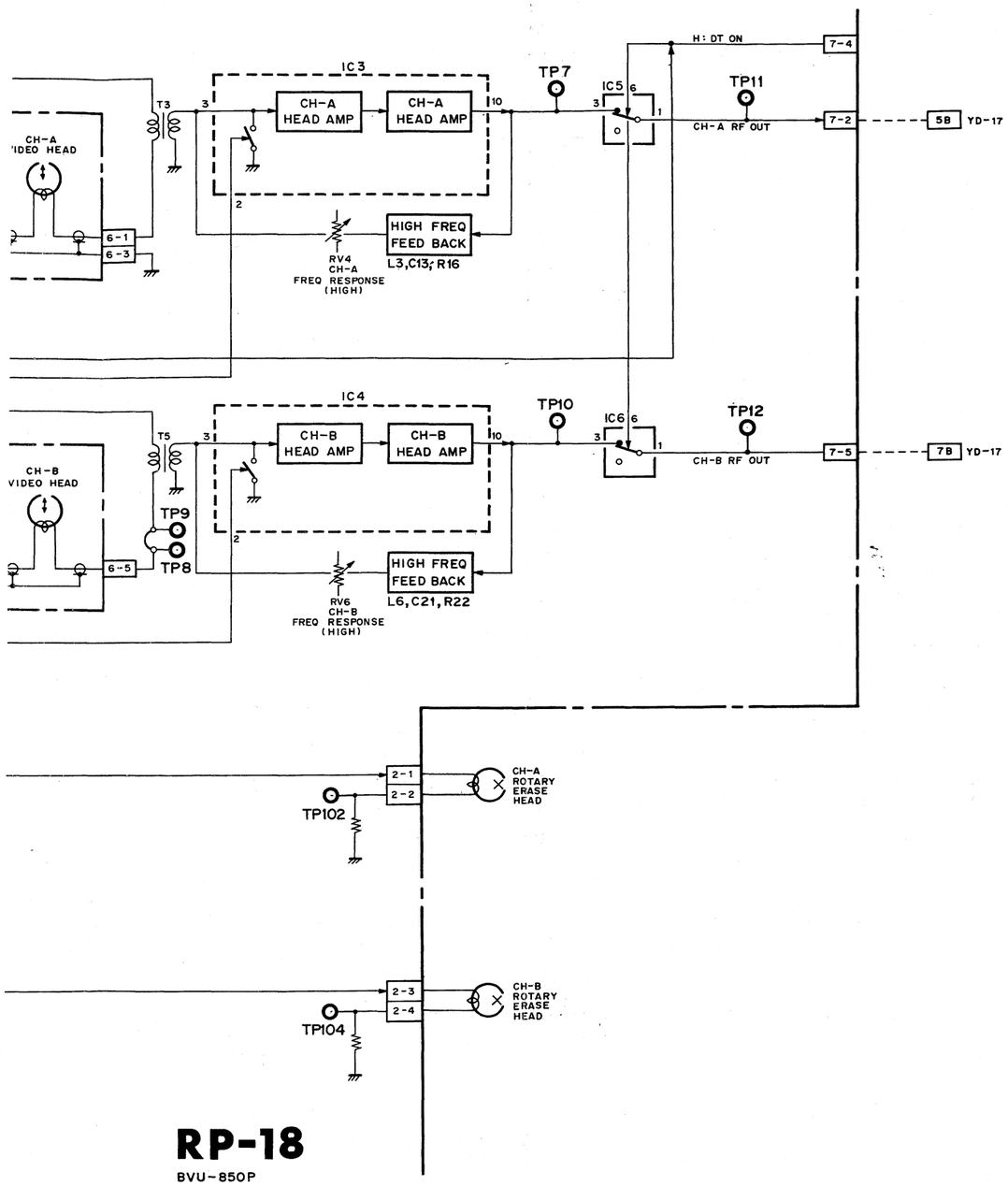

RP-18

BVU-850P

Y DEMODULATOR

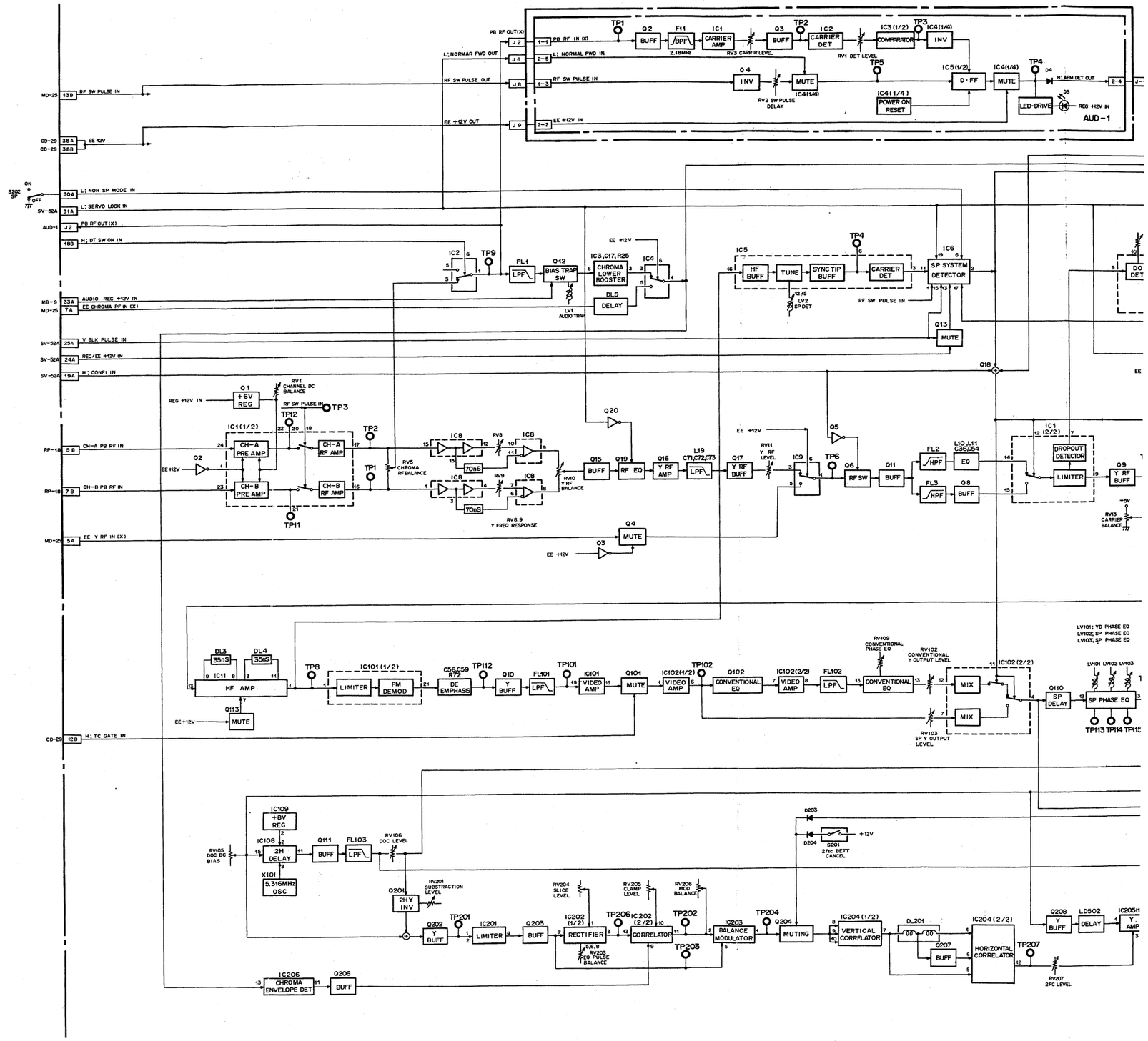

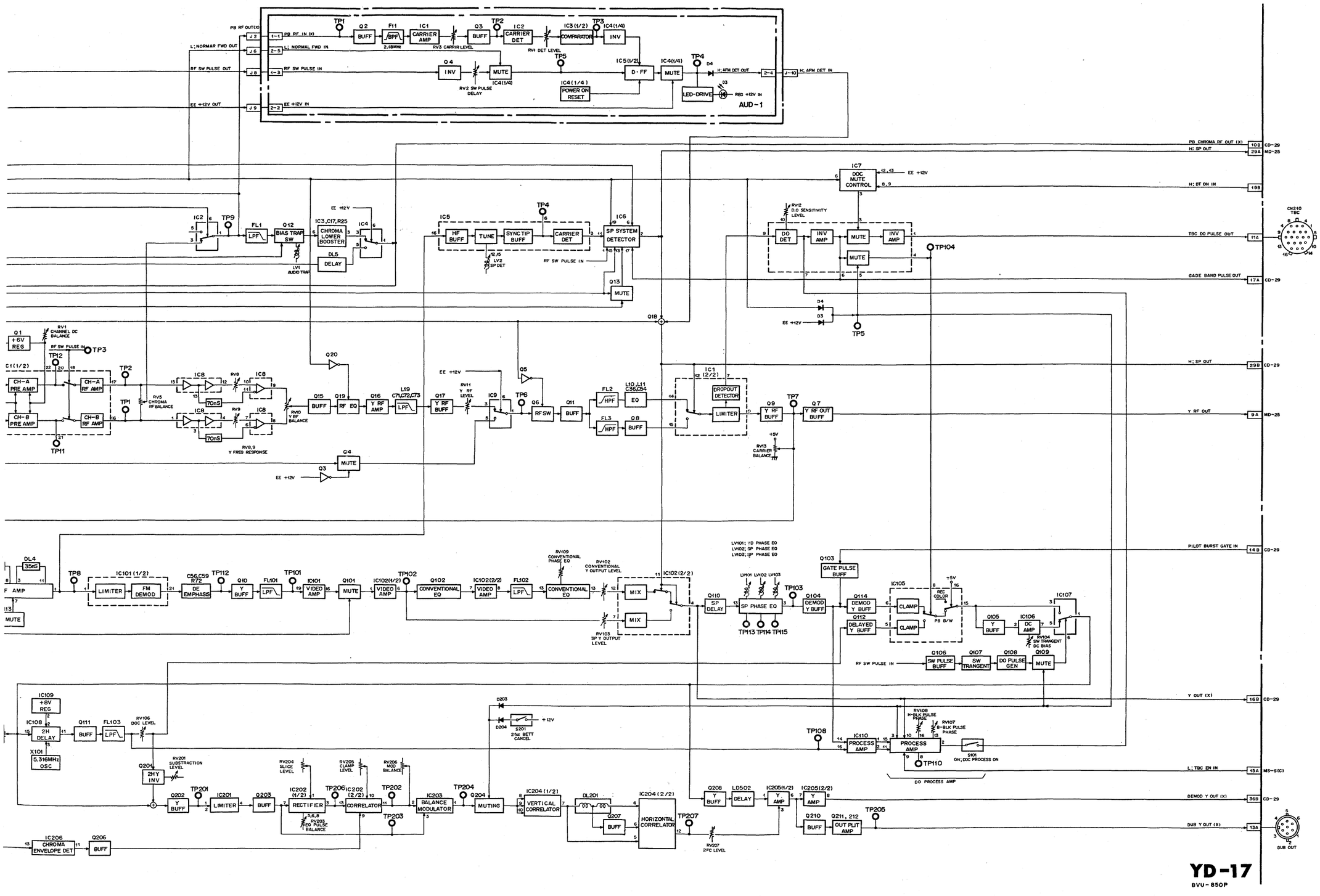
AUD-1
YD-17
BVU-850P
PB RF OUT(X)
L; NORMAR FWD OUT
RF SW PULSE OUT
EE +12V OUT
PB RF IN DO
L; NORMAL FWD IN
RF SW PULSE IN
EE +12V IN
CARRIER AMP
2.6MHz
RV3 CARRIR LEVEL
CARRIER DET
RV4 DET LEVEL
COMPARATOR
INV
MUTE
RV2 SW PULSE DELAY
D·FF
POWER ON RESET
LED-DRIVE
REG +12V IN
H; AFM DET OUT
H; AFM DET IN
PB CHROMA RF OUT (X)
H; SP OUT
H; DT ON IN
TBC DO PULSE OUT
GADE BAND PULSE OUT
DOC MUTE CONTROL
RV12 D.O SENSITIVITY LEVEL
DO DET
INV AMP
TP104
CN210 TBC
LPF
BIAS TRAP SW
LV1 AUDIO TRAP
CHROMA LOWER BOOSTER
DELAY
HF BUFF
TUNE
SYNC TIP BUFF
LV2 SP DET
SP SYSTEM DETECTOR
RF SW PULSE IN
RV1 CHANNEL DC BALANCE
+6V REG
CH-A PRE AMP
CH-B PRE AMP
CH-A RF AMP
CH-B RF AMP
RV5 CHROMA RF BALANCE
70nS
RV8,9 Y FREQ RESPONSE
RV10 Y RF BALANCE
BUFF
RF EQ
Y RF AMP
LPF
Y RF BUFF
RV11 Y RF LEVEL
RF SW
DROPOUT DETECTOR
LIMITER
EQ
HPF
Y RF OUT BUFF
+5V
RV13 CARRIER BALANCE
Y RF OUT
H; SP OUT
CD-29
MD-25
MS-S(C)
PILOT BURST GATE IN
GATE PULSE BUFF
SP PHASE EQ
LV101; YD PHASE EQ
LV102; SP PHASE EQ
LV103; BP PHASE EQ
DEMOD Y BUFF
DEMOD Y BUFF
DELAYED Y BUFF
CLAMP
REC COLOR
PB B/W
Y BUFF
DC AMP
RV104 SW TRANGENT DC BIAS
SW PULSE BUFF
SW TRANGENT
DO PULSE GEN
MUTE
SP DELAY
CONVENTIONAL EQ
VIDEO AMP
RV109 CONVENTIONAL PHASE EQ
RV102 CONVENTIONAL Y OUTPUT LEVEL
RV103 SP Y OUTPUT LEVEL
MIX
FM DEMOD
DE EMPHASS
Y BUFF
LPF
LIMITER
RV201 SUBSTRACTION LEVEL
2H Y INV
RV204 SLICE LEVEL
RV205 CLAMP LEVEL
RV206 MOD BALANCE
RECTIFIER
CORRELATOR
BALANCE MODULATOR
MUTING
VERTICAL CORRELATOR
HORIZONTAL CORRELATOR
RV208,209 EQ PULSE BALANCE
RV207 2FC LEVEL
S201 2fc BETT CANCEL
+12V
RV108 H-BLK PULSE PHASE
RV107 B-BLK PULSE PHASE
PROCESS AMP
S101 ON; DOC PROCESS ON
DO PROCESS AMP
OUT PUT AMP
DUB OUT
Y OUT (X)
DUB Y OUT (X)
DEMOD Y OUT (X)
L; TBC EN IN
+8V REG
2H DELAY
X101 5.316MHz OSC
CHROMA ENVELOPE DET
TP1
TP2
TP3
TP4
TP5
TP6
TP7
TP8
TP9
TP11
TP12
TP101
TP102
TP103
TP108
TP110
TP112
TP113 TP114 TP115
TP201
TP202
TP203
TP204
TP205
TP207

15-11

15-12

CHROMA DEMODULATOR

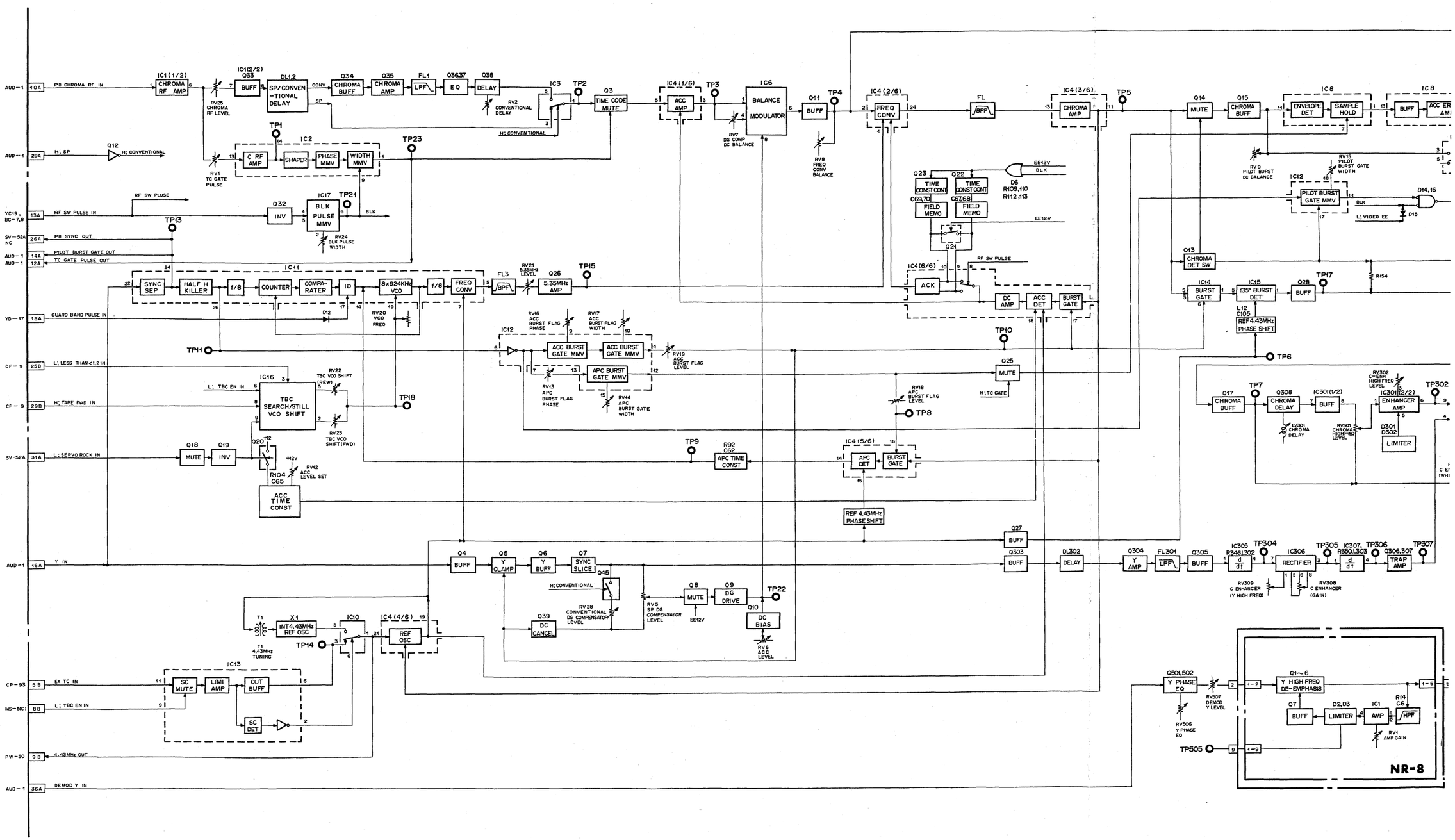

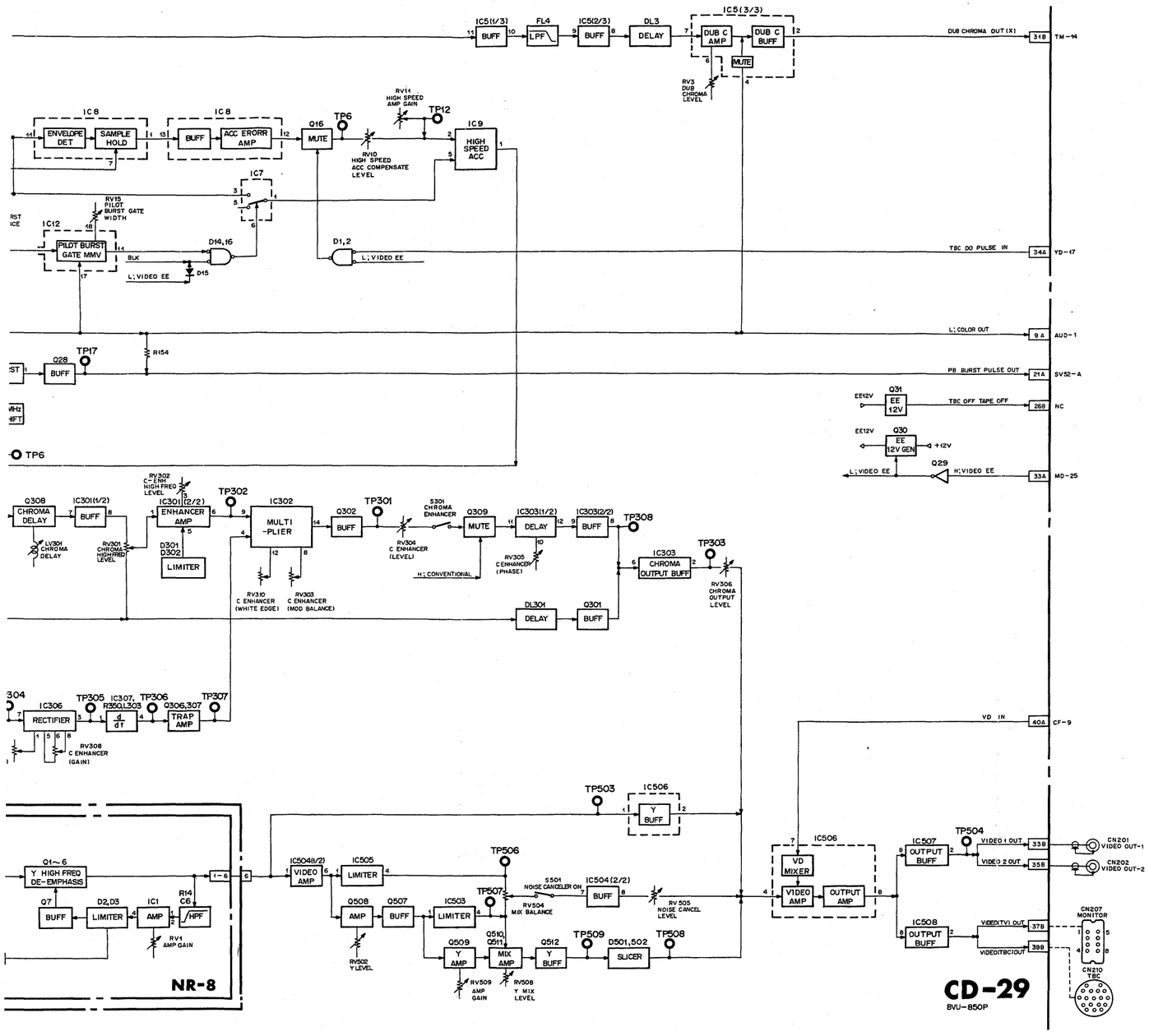
IC5(1/3)
BUFF
FL4
LPF
IC5(2/3)
BUFF
DL3
DELAY
IC5(3/3)
DUB C AMP
DUB C BUFF
MUTE
RV3 DUB CHROMA LEVEL
DUB CHROMA OUT(X)
31B
TM-14
IC8
ENVELOPE DET
SAMPLE HOLD
IC8
BUFF
ACC ERORR AMP
Q16
MUTE
TP6
RV11 HIGH SPEED AMP GAIN
TP12
RV10 HIGH SPEED ACC COMPENSATE LEVEL
IC9
HIGH SPEED ACC
IC7
RV15 PILOT BURST GATE WIDTH
IC12
PILOT BURST GATE MMV
D14,16
BLK
L;VIDEO EE
D15
D1,2
L;VIDEO EE
TBC DO PULSE IN
34A
YD-17
L;COLOR OUT
9A
AUD-1
Q28
BUFF
TP17
R154
PB BURST PULSE OUT
21A
SV52-A
Q31
EE 12V
EE12V
TBC OFF TAPE OFF
26B
NC
Q30
EE 12V GEN
EE12V
+12V
Q29
L;VIDEO EE
H;VIDEO EE
33A
MD-25
TP6
Q308
CHROMA DELAY
IC301(1/2)
BUFF
RV304 CHROMA DELAY
RV302 C-ENH HIGH FREQ LEVEL
IC301(2/2)
ENHANCER AMP
RV301 CHROMA HIGH FREQ LEVEL
D301 D302
LIMITER
TP302
IC302
MULTI -PLIER
RV310 C ENHANCER (WHITE EDGE)
RV303 C ENHANCER (MOD BALANCE)
Q302
BUFF
TP301
RV304 C ENHANCER (LEVEL)
S301 CHROMA ENHANCER
H;CONVENTIONAL
Q309
MUTE
IC303(1/2)
DELAY
RV305 C ENHANCER (PHASE)
IC303(2/2)
BUFF
TP308
IC303
CHROMA OUTPUT BUFF
TP303
RV306 CHROMA OUTPUT LEVEL
DL301
DELAY
Q301
BUFF
304
IC306
RECTIFIER
TP305
IC307, R350,L303
d/dT
TP306
Q306,307
TRAP AMP
TP307
RV308 C ENHANCER (GAIN)
VD IN
40A
CF-9
TP503
IC506
Y BUFF
IC506
VD MIXER
VIDEO AMP
OUTPUT AMP
TP504
IC507
OUTPUT BUFF
VIDEO 1 OUT
33B
CN201 VIDEO OUT-1
VIDEO 2 OUT
35B
CN202 VIDEO OUT-2
IC508
OUTPUT BUFF
VIDEO(TV) OUT
37B
VIDEO(TBC)OUT
39B
CN207 MONITOR
CN210 TBC
Q1~6
Y HIGH FREQ DE-EMPHASIS
Q7
BUFF
D2,D3
LIMITER
IC1
AMP
R14
C6
HPF
RV1 AMP GAIN
1-6
6
IC504(1/2)
VIDEO AMP
IC505
LIMITER
TP506
TP507
S501 NOISE CANCELER ON
RV504 MIX BALANCE
IC504(2/2)
BUFF
RV505 NOISE CANCEL LEVEL
Q508
AMP
Q507
BUFF
RV502 Y LEVEL
IC503
LIMITER
Q509
Y AMP
Q510, Q511
MIX AMP
Q512
Y BUFF
TP509
D501,502
SLICER
TP508
RV509 AMP GAIN
RV508 Y MIX LEVEL
NR-8
CD-29
BVU-850P

AUDIO REC/PB AMPLIFIER

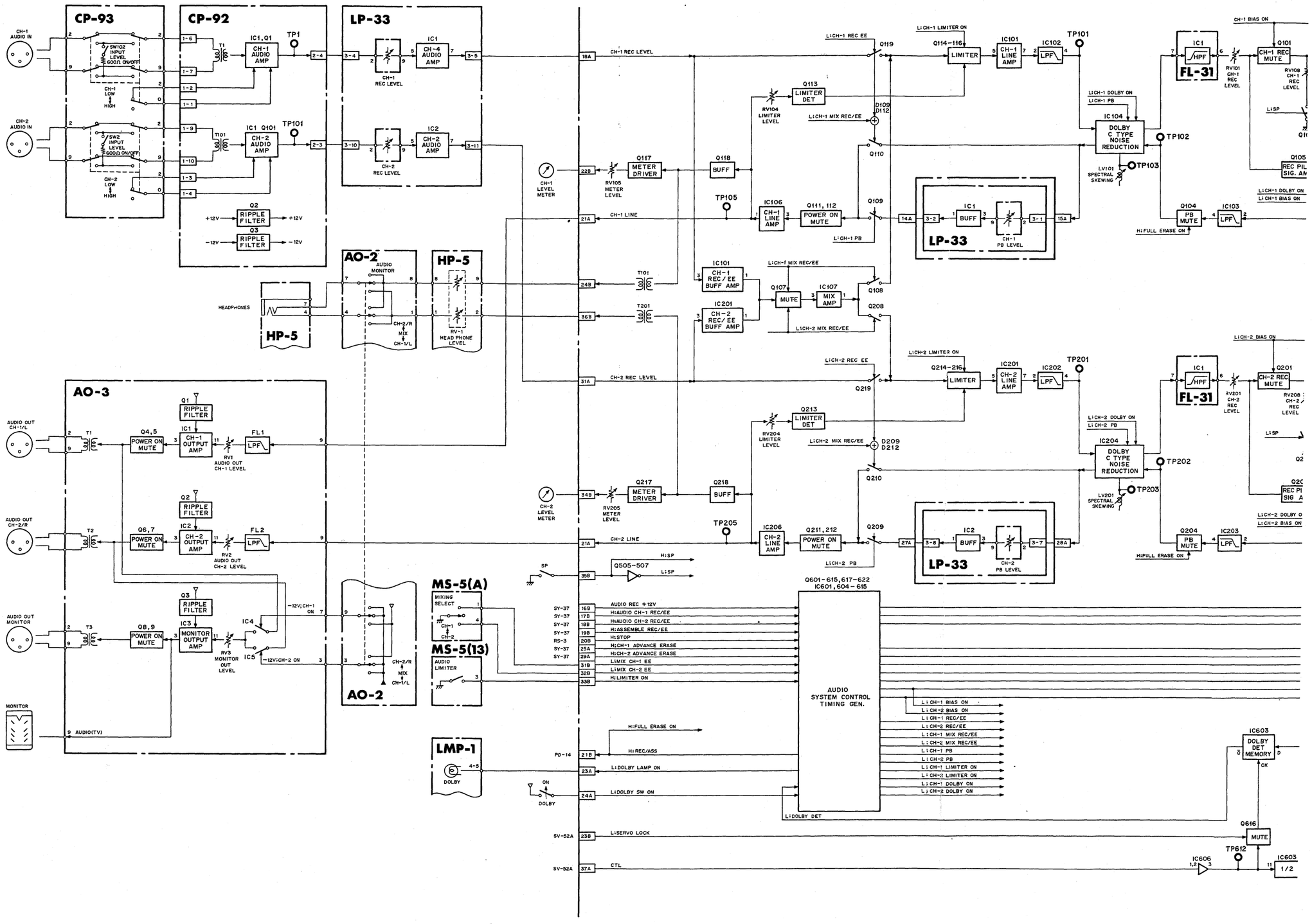

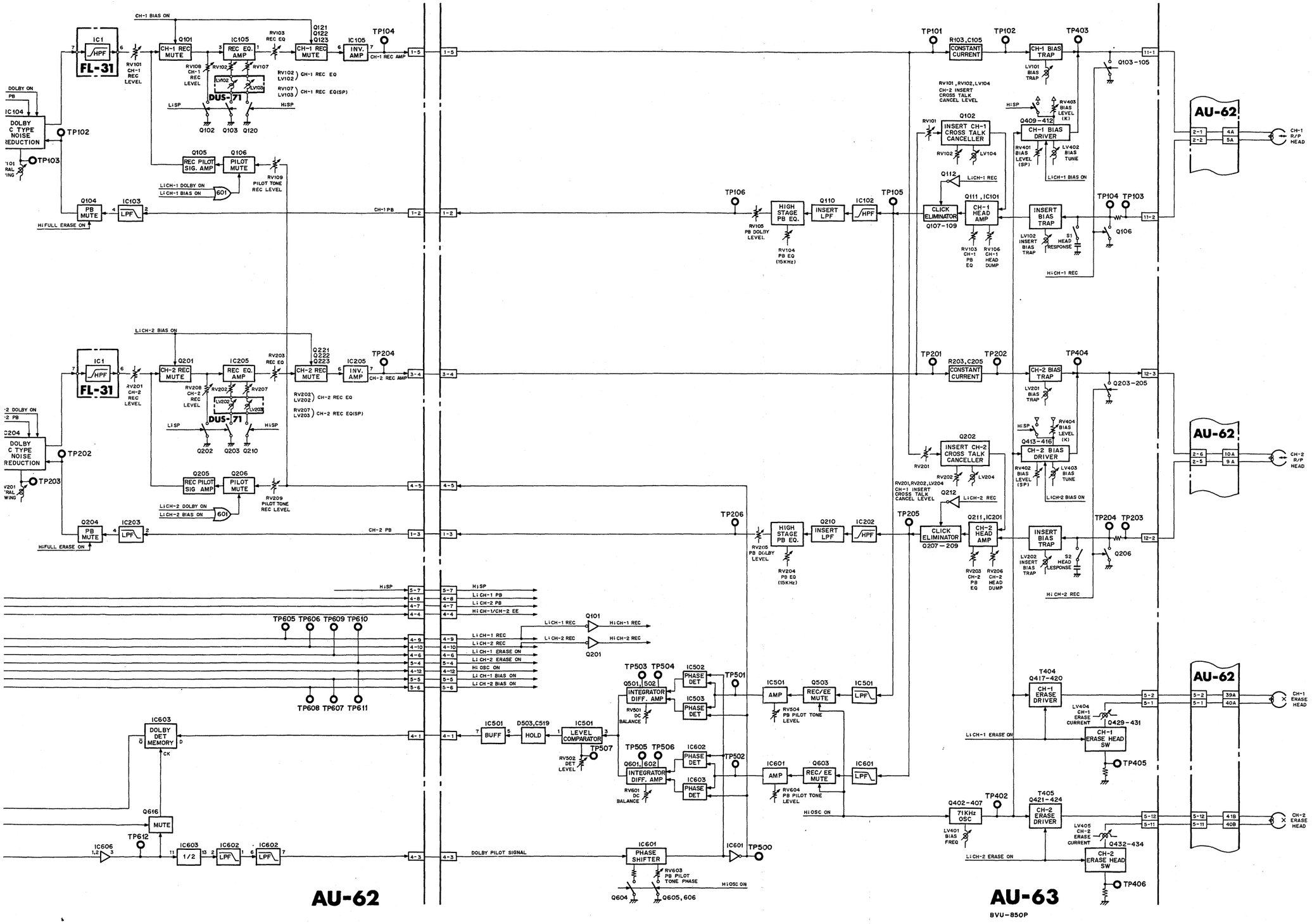
CH-1 BIAS ON
IC1
HPF
FL-31
RV101 CH-1 REC LEVEL
Q101
CH-1 REC MUTE
IC105
REC EQ. AMP
RV103 REC EQ
Q121 Q122 Q123
CH-1 REC MUTE
IC105
INV. AMP
TP104
CH-1 REC AMP
1-5
RV108 CH-1 REC LEVEL
RV102
RV107
LV102
LV103
DUS-71
RV102 LV102 CH-1 REC EQ
RV107 LV103 CH-1 REC EQ(SP)
LISP
HISP
Q102 Q103 Q120
DOLBY ON
PB
IC104
DOLBY C TYPE NOISE REDUCTION
TP102
TP103
Q105
REC PILOT SIG. AMP
Q106
PILOT MUTE
RV109 PILOT TONE REC LEVEL
LICH-1 DOLBY ON
LICH-1 BIAS ON
601
Q104
PB MUTE
IC103
LPF
CH-1 PB
1-2
HI:FULL ERASE ON
TP106
RV105 PB DOLBY LEVEL
HIGH STAGE PB EQ.
RV104 PB EQ (15KHz)
Q110
INSERT LPF
IC102
HPF
TP105
TP101
R103,C105
CONSTANT CURRENT
TP102
TP403
CH-1 BIAS TRAP
LV101 BIAS TRAP
11-1
Q103-105
RV101 ,RV102, LV104
CH-2 INSERT CROSS TALK CANCEL LEVEL
HI:SP
RV403 BIAS LEVEL (K)
Q409-412
CH-1 BIAS DRIVER
RV401 BIAS LEVEL (SP)
LV402 BIAS TUNE
LICH-1 BIAS ON
Q102
INSERT CH-1 CROSS TALK CANCELLER
RV101
RV102
LV104
Q112
LICH-1 REC
CLICK ELIMINATOR
Q107-109
Q111 ,IC101
CH-1 HEAD AMP
RV103 CH-1 PB EQ
RV106 CH-1 HEAD DUMP
INSERT BIAS TRAP
LV102 INSERT BIAS TRAP
S1 HEAD RESPONSE
TP104 TP103
11-2
Q106
HI:CH-1 REC
AU-62
2-1 2-2 4A 5A
CH-1 R/P HEAD
LICH-2 BIAS ON
IC1
HPF
FL-31
RV201 CH-2 REC LEVEL
Q201
CH-2 REC MUTE
IC205
REC EQ. AMP
RV203 REC EQ
Q221 Q222 Q223
CH-2 REC MUTE
IC205
INV. AMP
TP204
CH-2 REC AMP
3-4
RV208 CH-2 REC LEVEL
RV202
RV207
LV202
LV203
DUS-71
RV202 LV202 CH-2 REC EQ
RV207 LV203 CH-2 REC EQ(SP)
LISP
HISP
Q202 Q203 Q210
DOLBY ON
PB
IC204
DOLBY C TYPE NOISE REDUCTION
TP202
TP203
Q205
REC PILOT SIG AMP
Q206
PILOT MUTE
RV209 PILOT TONE REC LEVEL
LICH-2 DOLBY ON
LICH-2 BIAS ON
601
Q204
PB MUTE
IC203
LPF
CH-2 PB
1-3
HIFULL ERASE ON
TP206
RV205 PB DOLBY LEVEL
HIGH STAGE PB EQ.
RV204 PB EQ (15KHz)
Q210
INSERT LPF
IC202
HPF
TP205
TP201
R203,C205
CONSTANT CURRENT
TP202
TP404
CH-2 BIAS TRAP
LV201 BIAS TRAP
12-3
Q203-205
RV201
RV202,RV202,LV204
CH-1 INSERT CROSS TALK CANCEL LEVEL
HI:SP
RV404 BIAS LEVEL (K)
Q413-416
CH-2 BIAS DRIVER
RV402 BIAS LEVEL (SP)
LV403 BIAS TUNE
LICH-2 BIAS ON
Q202
INSERT CH-2 CROSS TALK CANCELLER
Q212
LICH-2 REC
CLICK ELIMINATOR
Q207 — 209
Q211,IC201
CH-2 HEAD AMP
RV203 CH-2 PB EQ
RV206 CH-2 HEAD DUMP
INSERT BIAS TRAP
LV202 INSERT BIAS TRAP
S2 HEAD RESPONSE
TP204 TP203
12-2
Q206
HI:CH-2 REC
AU-62
2-6 2-5 10A 9A
CH-2 R/P HEAD
HISP
5-7 4-8 4-7 4-4
LICH-1 PB
LICH-2 PB
HICH-1/CH-2 EE
TP605 TP606 TP609 TP610
TP608 TP607 TP611
LICH-1 REC
LICH-2 REC
Q101
HICH-1 REC
HICH-2 REC
Q201
4-9 4-10 4-6 5-4 4-12 5-5 5-6
LICH-1 REC
LICH-2 REC
LICH-1 ERASE ON
LICH-2 ERASE ON
HI:OSC ON
LICH-1 BIAS ON
LICH-2 BIAS ON
TP503 TP504
Q501,502
INTEGRATOR DIFF. AMP
RV501 DC BALANCE
IC502
PHASE DET
IC503
PHASE DET
TP501
IC501
AMP
RV504 PB PILOT TONE LEVEL
Q503
REC/EE MUTE
IC501
LPF
T404
Q417-420
CH-1 ERASE DRIVER
LV404 CH-1 ERASE CURRENT
Q429-431
CH-1 ERASE HEAD SW
TP405
5-2 5-1
AU-62
5-2 5-1 39A 40A
CH-1 ERASE HEAD
LICH-1 ERASE ON
IC603
DOLBY DET MEMORY
CK
4-1
IC501
BUFF
D503,C519
HOLD
IC501
LEVEL COMPARATOR
TP507
RV502 DET LEVEL
TP505 TP506
Q601,602
INTEGRATOR DIFF. AMP
RV601 DC BALANCE
IC602
PHASE DET
IC603
PHASE DET
TP502
IC601
AMP
RV604 PB PILOT TONE LEVEL
Q603
REC/ EE MUTE
IC601
LPF
HI:OSC ON
Q616
MUTE
TP612
IC606
IC603
1/2
IC602
LPF
IC602
LPF
4-3
DOLBY PILOT SIGNAL
IC601
PHASE SHIFTER
IC601
TP500
RV603 PB PILOT TONE PHASE
Q604
Q605,606
HI:OSC ON
Q402-407
71KHz OSC
LV401 BIAS FREQ
TP402
T405
Q421-424
CH-2 ERASE DRIVER
LV405 CH-2 ERASE CURRENT
Q432-434
CH-2 ERASE HEAD SW
TP406
5-12 5-11
AU-62
5-12 5-11 41B 40B
CH-2 ERASE HEAD
LICH-2 ERASE ON
AU-62
AU-63
BVU-850P

DRUM/CAPSTAN PWM SERVO

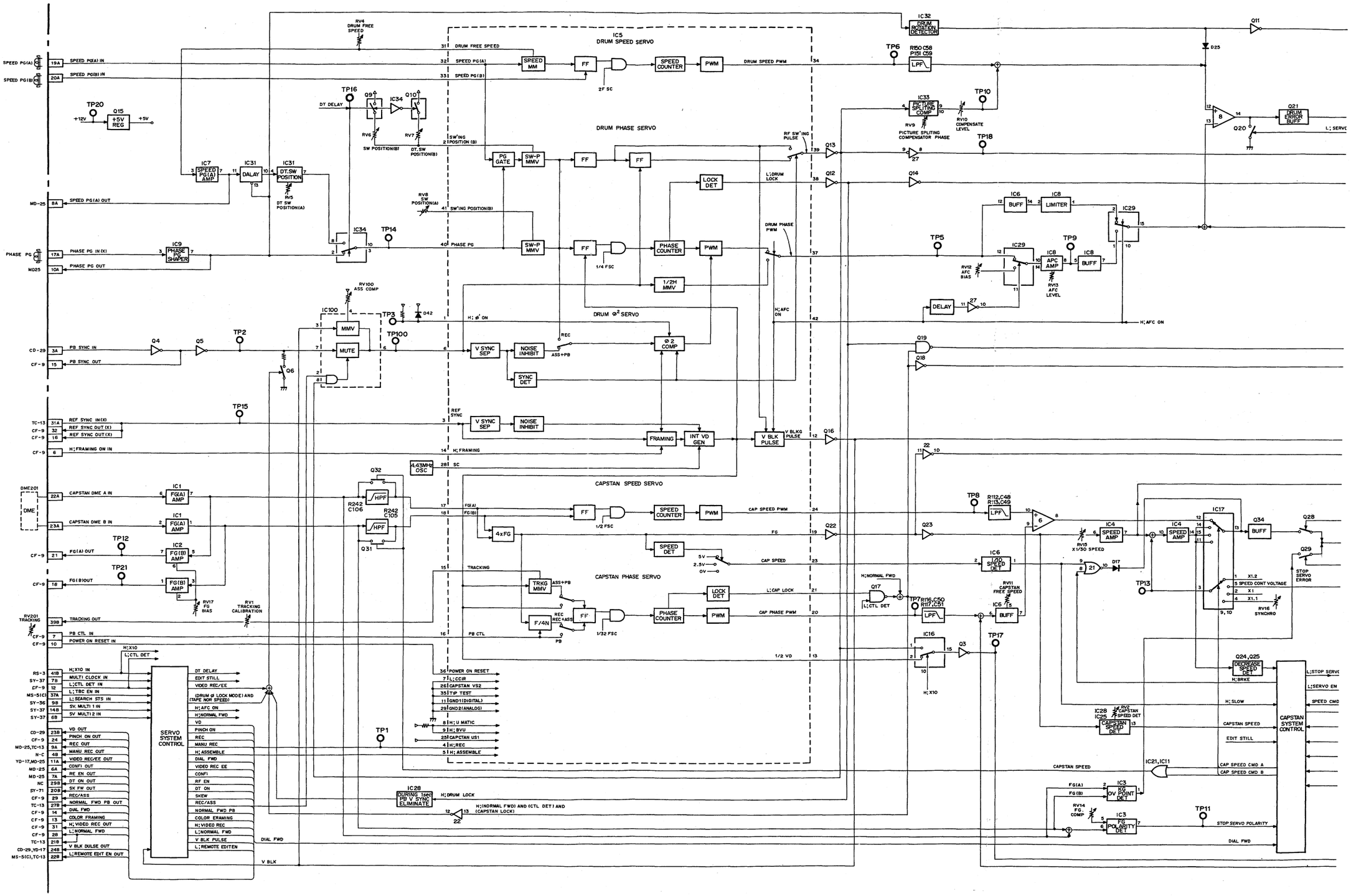

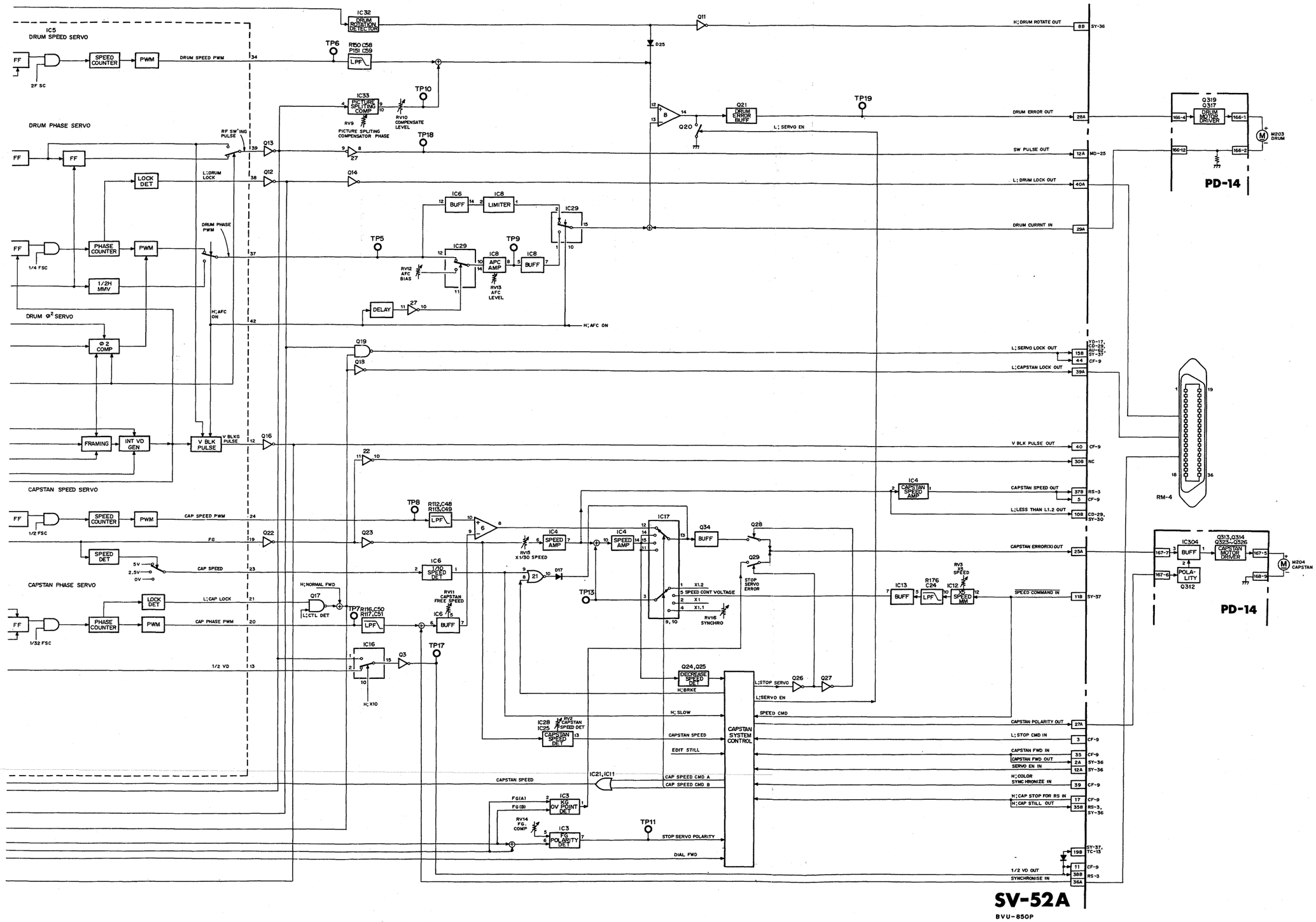
IC5
DRUM SPEED SERVO
FF
SPEED COUNTER
PWM
DRUM SPEED PWM
2F SC
IC32
DRUM ROTATION DETECTOR
TP6
R150 C58
P151 C59
LPF
TP10
IC33
PICTURE SPLITING COMP
RV9
PICTURE SPLITING COMPENSATOR PHASE
RV10
COMPENSATE LEVEL
TP18
Q11
D25
Q21
DRUM ERROR BUFF
Q20
TP19
L; SERVO EN
H; DRUM ROTATE OUT
DRUM ERROR OUT
SW PULSE OUT
L; DRUM LOCK OUT
DRUM CURRNT IN
Q319
Q317
DRUM MOTOR DRIVER
M203
DRUM
PD-14
DRUM PHASE SERVO
RF SW'ING PULSE
Q13
Q12
Q14
LOCK DET
L; DRUM LOCK
IC6
BUFF
IC8
LIMITER
IC29
TP5
TP9
IC8
APC AMP
IC8
BUFF
RV12
AFC BIAS
RV13
AFC LEVEL
DELAY
DRUM PHASE PWM
PHASE COUNTER
1/4 FSC
1/2H MMV
H; AFC ON
DRUM Φ2 SERVO
Φ2 COMP
Q19
Q18
L; SERVO LOCK OUT
L; CAPSTAN LOCK OUT
YD-17, CD-29, AU-62, SY-37
CF-9
FRAMING
INT VD GEN
V BLK PULSE
V BLKG PULSE
Q16
V BLK PULSE OUT
NC
CAPSTAN SPEED SERVO
IC4
CAPSTAN SPEED AMP
CAPSTAN SPEED OUT
L; LESS THAN L1.2 OUT
RS-3
CD-29, SY-30
TP8
R112,C48
R113,C49
LPF
Q22
Q23
IC4
SPEED AMP
IC17
Q34
BUFF
Q28
Q29
STOP SERVO ERROR
CAPSTAN ERROR(X) OUT
SPEED COMMAND IN
IC6
1/20 SPEED DET
RV15
X1/30 SPEED
D17
TP13
1 X1.2
5 SPEED CONT VOLTAGE
2 X1
4 X1.1
9, 10
RV16
SYNCHRO
IC13
BUFF
R176
C24
LPF
IC12
X5 SPEED AMP
RV3
X5 SPEED
IC304
BUFF
POLA-LITY Q312
Q313,0314
Q323~Q326
CAPSTAN MOTOR DRIVER
M204
CAPSTAN
PD-14
CAPSTAN SPEED SERVO
SPEED COUNTER
PWM
CAP SPEED PWM
1/2 FSC
FG
SPEED DET
5V
2.5V
0V
CAP SPEED
CAPSTAN PHASE SERVO
LOCK DET
L; CAP LOCK
PHASE COUNTER
PWM
CAP PHASE PWM
1/32 FSC
1/2 VD
H; NORMAL FWD
Q17
L; CTL DET
TP7
R116,C50
R117,C51
LPF
RV11
CAPSTAN FREE SPEED
IC6
BUFF
IC16
Q3
TP17
H; X10
Q24,025
DECREASE SPEED DET
H; BRKE
Q26
Q27
L; STOP SERVO
L; SERVO EN
H; SLOW
SPEED CMD
CAPSTAN POLARITY OUT
L; STOP CMD IN
IC28
IC25
RV2
CAPSTAN SPEED DET
CAPSTAN SPEED
EDIT STILL
CAPSTAN SYSTEM CONTROL
CAPSTAN FWD IN
CAPSTAN FWD OUT
SERVO EN IN
H; COLOR SYNCHRONIZE IN
H; CAP STOP FOR RS IN
H; CAP STILL OUT
IC21, IC11
CAP SPEED CMD A
CAP SPEED CMD B
CAPSTAN SPEED
FG(A)
FG(B)
IC3
0V PO1NT DET
RV14
FG. COMP
IC3
FG POLARITY DET
TP11
STOP SERVO POLARITY
DIAL FWD
1/2 VD OUT
SYNCHRONISE IN
SV-52A
BVU-850P
RM-4

REEL SERVO

REEL SERVO

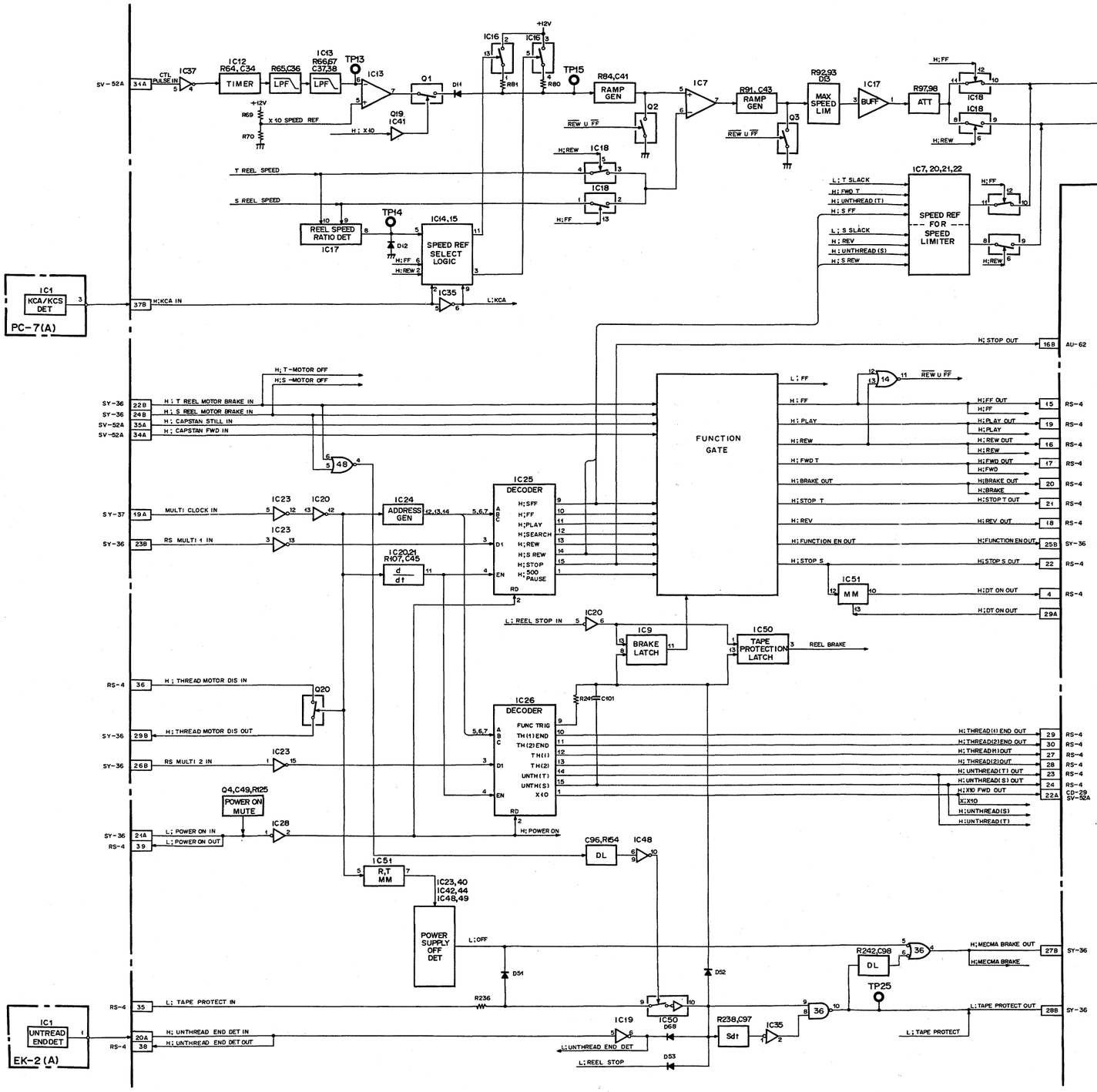

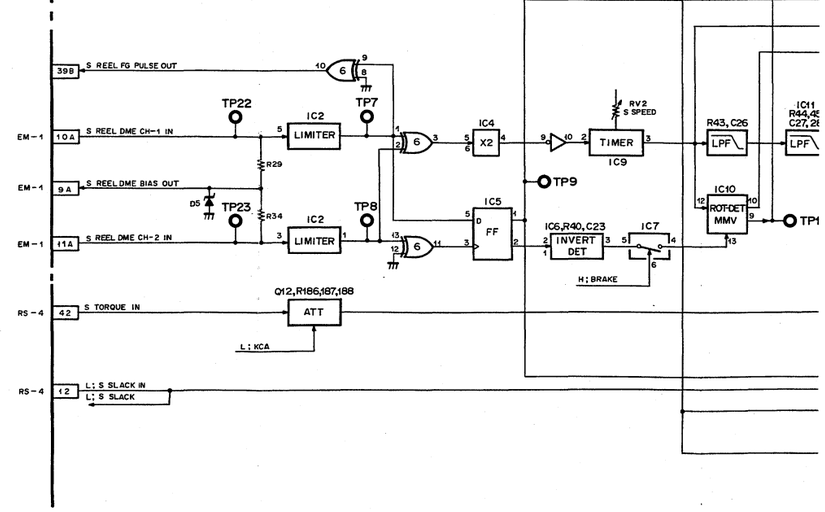

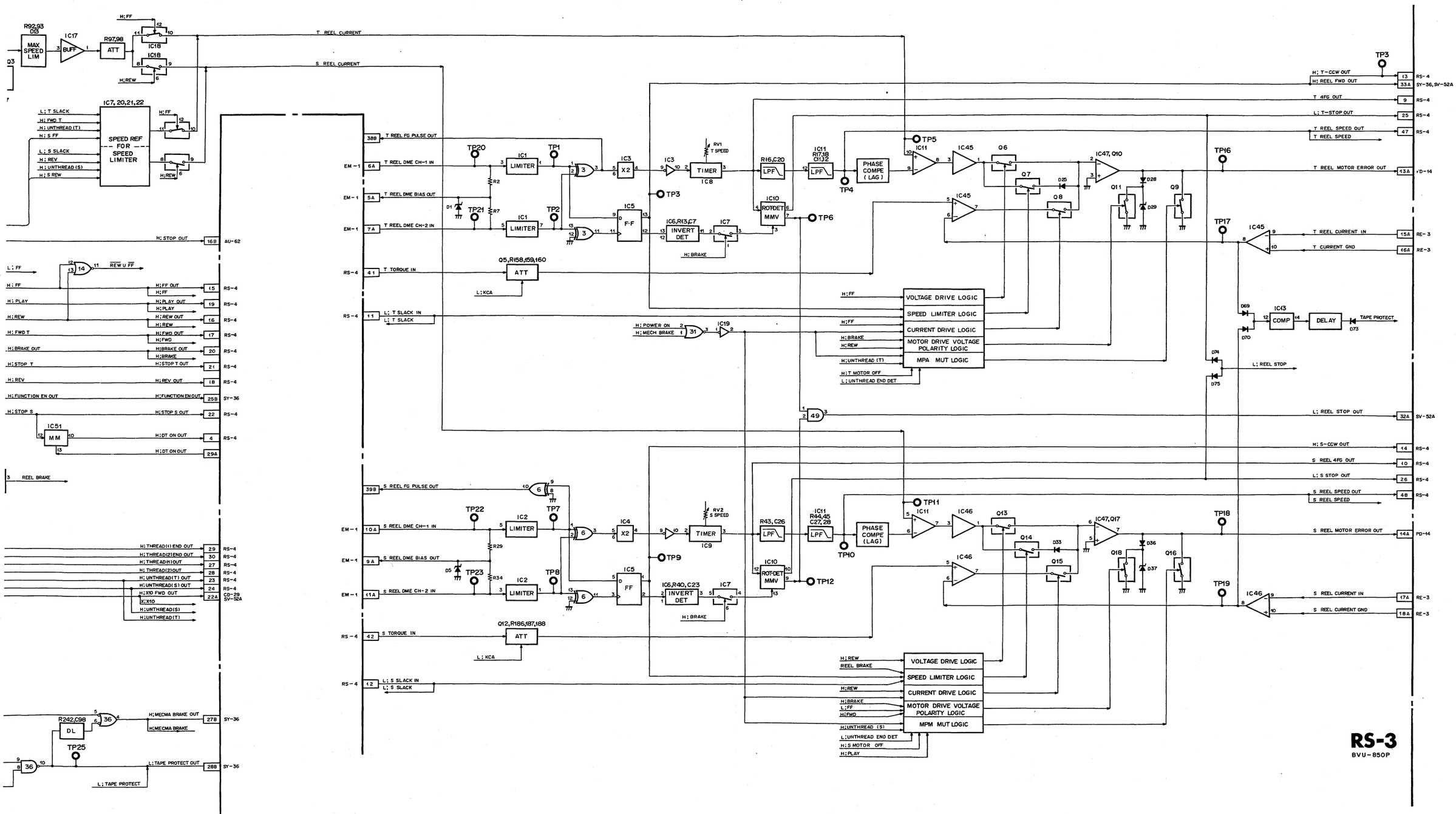
RS-3
BVU-850P
VOLTAGE DRIVE LOGIC
SPEED LIMITER LOGIC
CURRENT DRIVE LOGIC
MOTOR DRIVE VOLTAGE POLARITY LOGIC
MPA MUT LOGIC
MPM MUT LOGIC
SPEED REF FOR SPEED LIMITER
PHASE COMPE (LAG)
LIMITER
TIMER
INVERT DET
ROTDET MMV
ATT
COMP
DELAY
TAPE PROTECT
T REEL CURRENT
S REEL CURRENT
T REEL MOTOR ERROR OUT
S REEL MOTOR ERROR OUT
L; REEL STOP
L; REEL STOP OUT
S REEL CURRENT IN
S REEL CURRENT GND
T REEL CURRENT IN
T CURRENT GND
H; STOP OUT
H; MECMA BRAKE OUT
L; TAPE PROTECT OUT
L; TAPE PROTECT
REEL BRAKE

TAPE TENSION SERVO

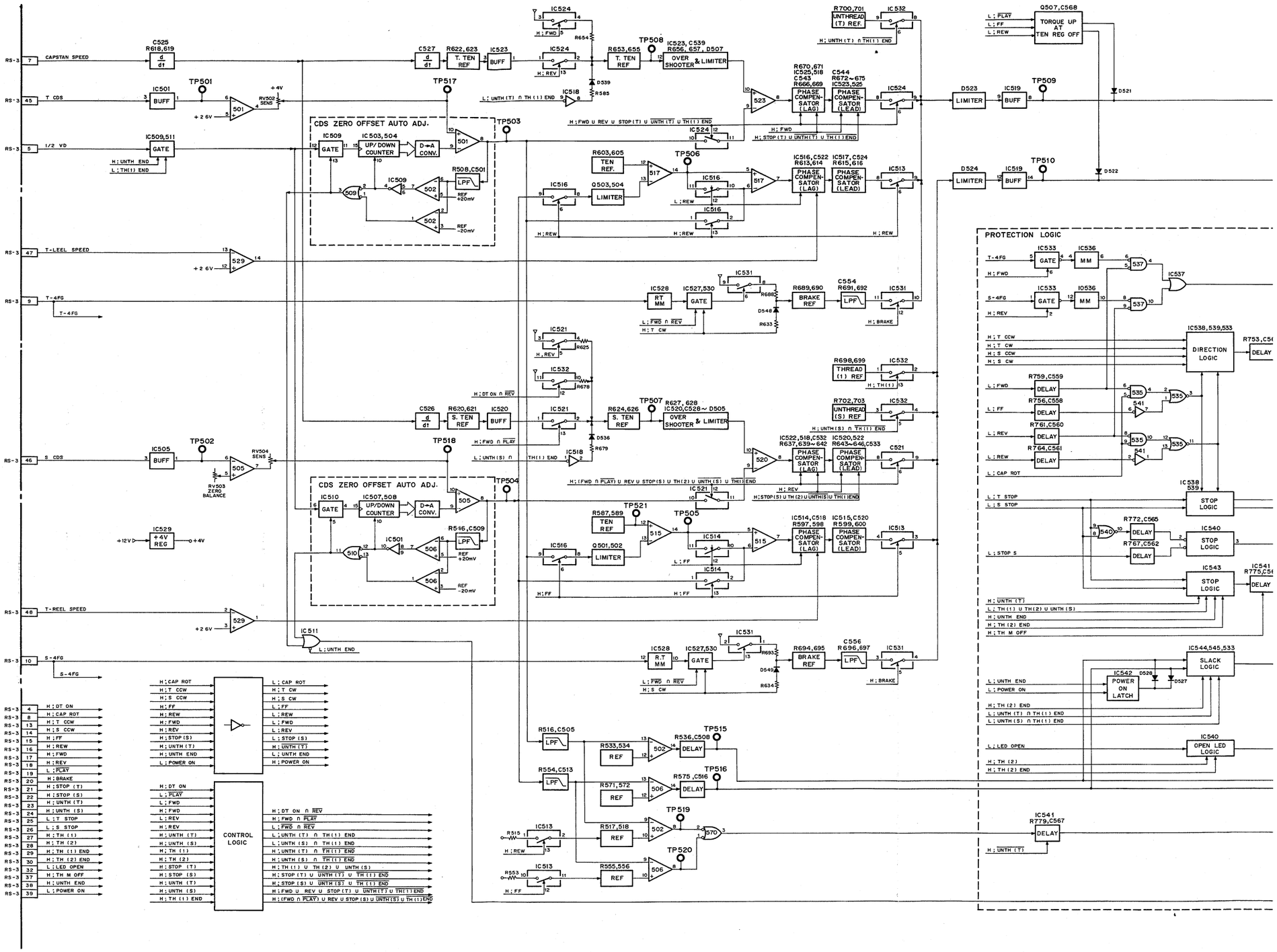

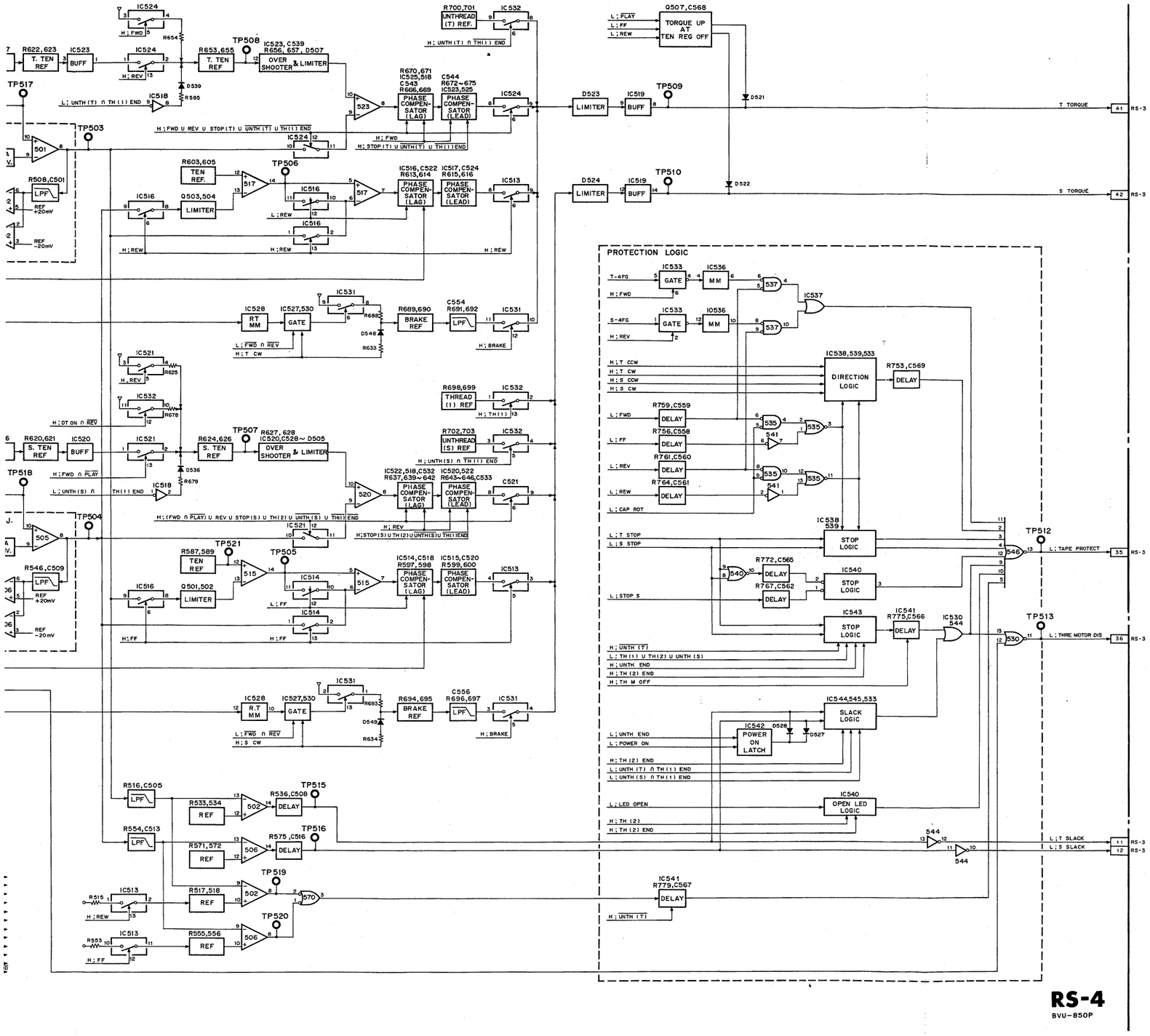
PROTECTION LOGIC
T TORQUE
S TORQUE
L;T SLACK
L;S SLACK
L;TAPE PROTECT
L;THRE MOTOR DIS
RS-4
BVU-850P

SECTION 16
SEMICONDUCTOR ELECTRODES

TYPE	PAGE
AFL25F15000G1	16- 5
AM26LS31PC	16- 5
AM26LS32PC	16- 5
AM9513DC	
AM9513PC	
AM9519APC	
AN607P	16- 5
AN608P	16- 5
BX1140	16- 5
BX1152	16- 5
BX1246	16- 5
BX1247	16- 5
BX1248	16- 5
BX1249	16- 6
BX1250	16- 6
BX1251	16- 6
BX1252	16- 6
BX1253	16- 6
BX1254	16- 6
BX1255	16- 6
BX1256	16- 6
BX1257	16- 7
BX1258	16- 7
BX1262	16- 7
BX1263	16- 7
BX1264	16- 7
BX1266	16- 7
BX1267	16- 7
BX1361	
BX343	16- 7
BX366A	16- 7
BX373	16- 8
BX388	16- 8
BX389	16- 8
BX3914	16- 8
BX3915	16- 9
BX3949	16- 8
CX130	16- 9
CX131A	16- 9
CX134A	16- 9
CX135	16- 9
CX170	16- 9
CX188	16- 9
CX20060	16- 9
CX22013	16- 9
CX756A	16-10
CX757	16-10
CX859	16-10
CX872	16-11
CXA1020P	16-11
CXL5001P	16-11
HA17458GS	16-25
HA17902P	16-11
HD14001BP	16-17
HD14011BP	16-17
HD14066BP	16-19
HD14069UBP	16-20
HD14538BP	16-24

TYPE	PAGE
LB1261	16-11
LH0080	16-12
LH0084	16-12
M51841P	16-13
M54517P	16-13
M54519P	16-13
M54529P	16-13
M74LS244P	16-16
MB4204M	16-13
MB4204PF	16-13
MB84001B	16-17
MB84011B	16-17
MB84013B	16-18
MB84053B	16-19
MB84069B	16-20
MB84070B	16-20
MB84077B	16-21
MC14001BCP	16-17
MC14077BCP	16-21
MC14538BCP	16-24
MC14584BCP	16-14
MC1495L	16-14
MC1496P	16-14
MC14598BCP	16-14
MSM2128-1AS	16-14
MSM2128-12RS	16-14
MSM2128-15RS	16-14
MSM4001	16-17
MSM4011RS	16-17
NE555N	16-12
NJM2041M-D	16-15
NJM2043D-D	16-15
NJM2902N	16-11
NJM2903D	16-15
NJM4558D	16-15
NJM4560D-D	16-15
NJM4562D	16-14
NJM78L05A	16-15
SN16913P	16-17
SN7407N	16-15
SN74HC74N	16-17
SN74LS05N	16-15
SN74LS138N	16-15
SN74LS139N	16-15
SN74LS156N	16-16
SN74LS158N	16-16
SN74LS221NS	16-16
SN74LS244N	16-16
SN74LS32N	16-16
SN74LS377N	16-16
SN74LS378N	16-17
SN74LS74AN	16-17

TYPE	PAGE
TA7060AP	16-17
TA7076P	16-17
TA7357AP	16-17
TC4001BF	16-17
TC4001BP	16-17
TC4001UBP	16-17
TC4009UBP	16-17
TC4011BF	16-17
TC4011BP	16-17
TC4012BP	16-18
TC4013BF	16-18
TC4013BP	16-18
TC4015BF	16-18
TC4015BP	16-18
TC40161BP	16-18
TC4020BP	16-19
TC4023BF	16-19
TC4023BP	16-19
TC4025BP	16-19
TC4027BF	16-19
TC4027BP	16-19
TC4030BP	16-19
TC4043BP	16-19
TC4052BP	16-20
TC4053BP	16-20
TC4066BP	16-20
TC4068BP	16-20
TC4069UBF	16-20
TC4069UBP	16-20
TC4071BP	16-20
TC4072BP	16-21
TC4073BP	16-21
TC4075BP	16-21
TC4077BP	16-21
TC4078BP	16-21
TC4081BF	16-21
TC4081BP	16-21
TC4082BP	16-21
TC4085BP	16-21
TC4093BP	16-22
TC4099BP	16-22
TC40H004P	16-22
TC40H074P	16-22
TC40H368P	16-22
TC4510BP	16-22
TC4512BP	16-23
TC4516BP	16-23
TC4519BP	16-23
TC4528BF	16-23
TC4528BP	16-23
TC4538BF	16-24
TC4539BP	16-24
TC504013BF	16-18
TC504013BP	16-18
TC504027BF	16-19
TC504027BP	16-19
TC5067BP	16-24
TL082CP	16-24
TL8608P	16-24

TYPE	PAGE
uA733HC	16-24
uA7912UC	16-25
uA796HC	16-24
uPA54H	16-25
uPA64H	16-25
uPA74V	16-26
uPC1458C	16-25
uPC311C	16-25
uPC324C	16-25
uPC339C	16-25
uPC4558C	16-14
uPC7805H	16-25
uPC78L05	16-25
uPC78L08	16-25
uPC7905H	16-25
uPD4001BC	16-17
uPD4011BC	16-17
uPD4013C	16-18
uPD4023C	16-18
uPD4027C	16-19
uPD4069UBC	16-20
uPD4071BC	16-20
uPD4078BC	16-21
uPD4081BC	16-21
uPD4516BC	16-23
uPD4519BC	16-23
uPD4528BC	16-23
uPD4539BC	16-24

TYPE	PAGE
10E-1	16-27
10E-2	16-27
10YD4.5B	16-27
1S1555	16-27
1S1555S	16-27
1S1925P	16-27
1S2076	16-27
1S2473	16-27
1S2836	
1S2837	16-27
1SS119	16-27
1SS133	16-27
1SS148	16-27
1SS53	16-27
1SS97	16-27
1SS99	16-27
2SA1026	16-26
2SA1027R	16-26
2SA1115	16-26
2SA1141	16-26
2SA1162	16-26
2SA1175	16-26
2SA1226	16-26
2SA678	16-26
2SA684	16-26
2SA733	16-26
2SA747	16-26
2SA747A	16-26
2SA771	16-26
2SA773	16-26
2SA844	16-26
2SB733	16-26
2SB734	16-26
2SB739	16-26
2SB740	16-26
2SB834	16-26
2SB856	16-26
2SC1116	16-26
2SC1364	16-26
2SC1474	16-26
2SC1475	16-26
2SC1634	16-26
2SC1636	16-26
2SC1740	16-26
2SC1963	16-26
2SC1983	16-26
2SC2021	16-26
2SC2315	16-26
2SC2458	16-26
2SC2603	16-26
2SC2681	16-26
2SC2690A	16-26
2SC2712	16-26
2SC2757	16-26
2SC2771	16-26
2SC2878	16-26

TYPE	PAGE
2SC3052	16-26
2SC403C	16-26
2SC403SP	16-26
2SC634SP	16-26
2SC641K	16-26
2SC945	16-26
2SD1055	16-26
2SD773	16-26
2SD774	16-26
2SD788	16-26
2SD789	16-26
2SK240	16-26
2SK523	16-26
DAN202	16-27
DAP202	16-27
DTA144EF	16-26
DTA144ES	16-26
DTC144EF	16-26
DTC144ES	16-26
EBR5104S-10	16-27
EBR5104S	
EQA01-05	16-27
EQA01-09	16-27
FC54M	16-27
GL5HD5	16-27
HLMP-1302	16-27
J175	16-26
PS4005	16-27
RD??EB	16-27
SIB01-02	16-27
SPS102	16-27
TLY123	16-27
TLR321	16-27
TX429D	16-27
TX429M	16-27
U05E	16-27
U05G	16-27
V06C	16-26

AM26LS31PC (ADVANCED MICRO DEVICE)
HIGH SPEED DIFFERENTIAL LINE DRIVER
— TOP VIEW —

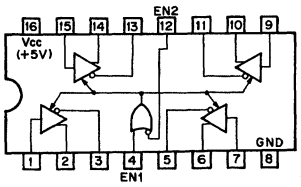

FUNCTION TABLE		
EN2	EN1	OUTPUT
0	0	ENABLE
0	1	ENABLE
1	0	HI-Z
1	1	ENABLE

0 ; LOW LEVEL
1 ; HIGH LEVEL
HI-Z ; HIGH IMPEDANCE

AM26LS32PC (ADVANCED MICRO DEVICES)
HIGH SPEED DIFFERENTIAL LINE RECEIVER
— TOP VIEW —

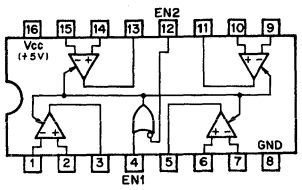

FUNCTION TABLE		
EN2	EN1	OUTPUT
0	0	ENABLE
0	1	ENABLE
1	0	HI-Z
1	1	ENABLE

0; LOW LEVEL
1; HIGH LEVEL
HI-Z ; HIGH IMPEDANCE

	SENSE	INPUT VOLT
LS32	±200mV	± 7V
LS33	±500mV	±15V

AN607P
****
AN607P (MATSUSHITA)
AN608P (MATSUSHITA)
WIDE BAND AMPLIFIER
— PRINTED SIDE VIEW —

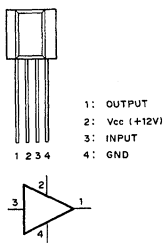

AFL25F15000G1 (MURATA)
ACTIVE LOW-PASS FILTER
— IMPRINTED SIDE VIEW —

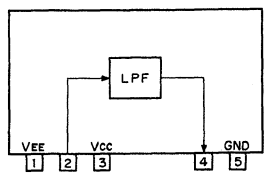

BX1140 (SONY)
HF AMP
— REAR VIEW —

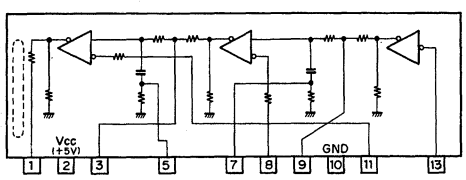

BX1152 (SONY)
DOLBY (C TYPE) NOISE REDUCTION SYSTEM
— REAR VIEW —

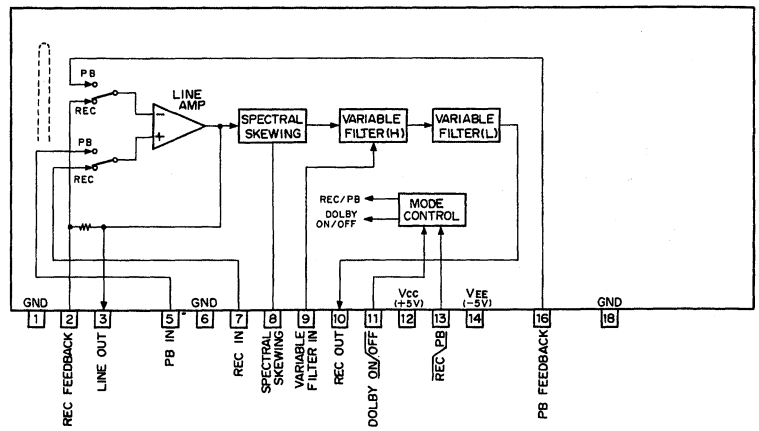

BX1246 (SONY)
RF AND VIDEO LEVEL METER DRIVER
— PRINTED SIDE VIEW —

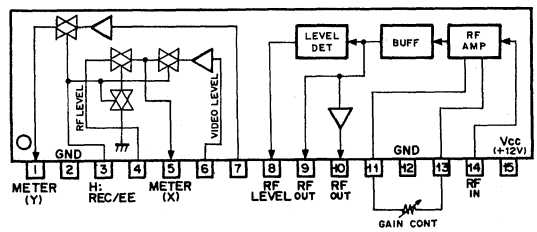

BX1247 (SONY)
LOWER FREQUENCY BOOSTER AMPLIFIER
— PRINTED SIDE VIEW —

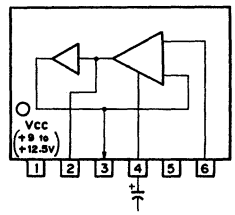

BX1248 (SONY)
DROPOUT DETECTOR
— PRINTED SIDE VIEW —

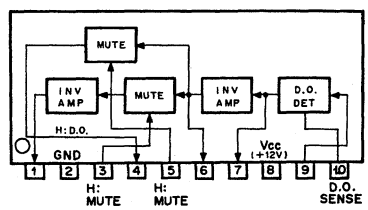

BX1249 (SONY)
VIDEO PHASE EQUALIZER
— PRINTED SIDE VIEW —

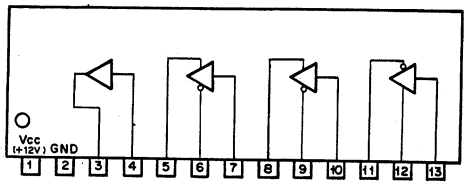

BX1250 (SONY)
CHROMA OUTPUT AMPLIFIER
— REAR VIEW —

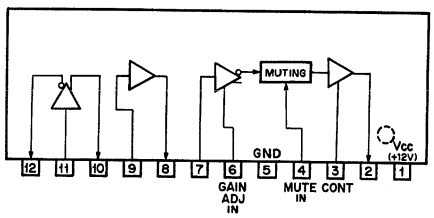

BX1251 (SONY)
EXTERNAL SUBCARRIER AMPLIFIER
— PRINTED SIDE VIEW —

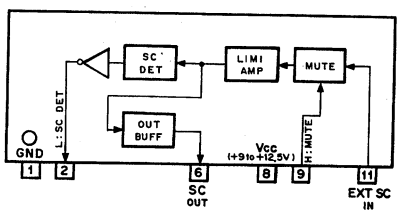

BX1252 (SONY)
TBC SEARCH/STILL VCO SHIFT SWITCH
— PRINTED SIDE VIEW —

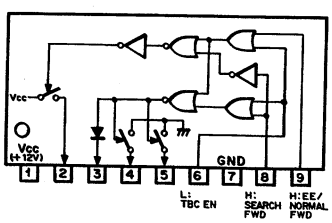

BX1253 (SONY)
SYNC TIP CARRIER DETECTOR AND NORMAL/SP MODE DETECTOR
— PRINTED SIDE VIEW —

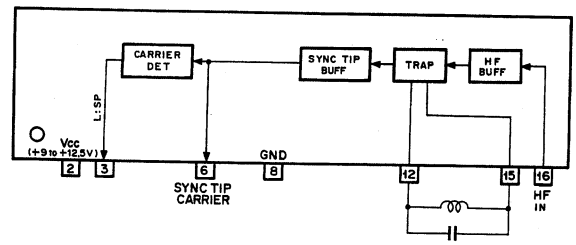

BX1254 (SONY)
NORMAL/SP MODE DETECTOR
— PRINTED SIDE VIEW —

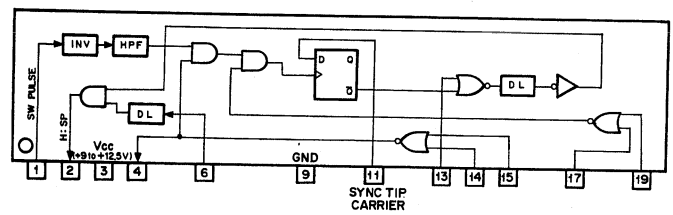

BX1255 (SONY)
HIGH SPEED ACC DETECTOR
— PRINTED SIDE VIEW —

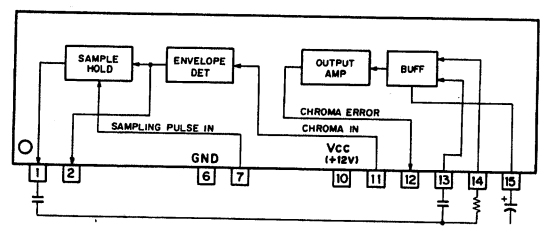

BX1256 (SONY)
FULL WAVE DETECTOR/CORRELATION SWITCH
— REAR VIEW —

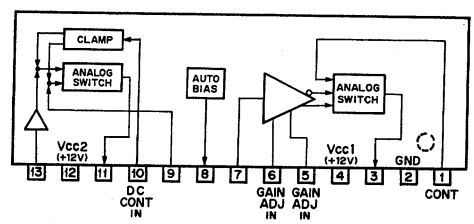

BX1257 (SONY)
Y-RF SIDE BAND EQUALIZER
— PRINTED SIDE VIEW —

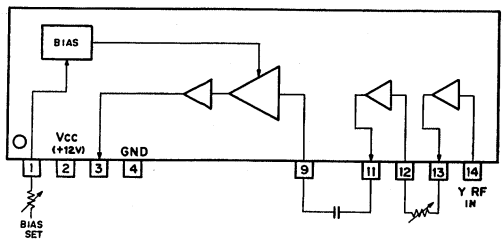

BX1258 (SONY)
TIME CODE MUTE GENERATOR
— PRINTED SIDE VIEW —

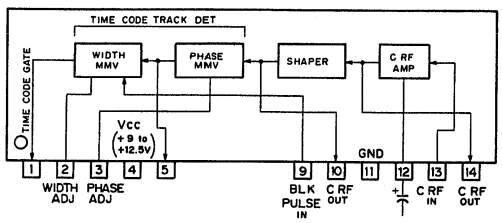

BX1262 (SONY)
PILOT BURST INSERTER
— PRINTED SIDE VIEW —

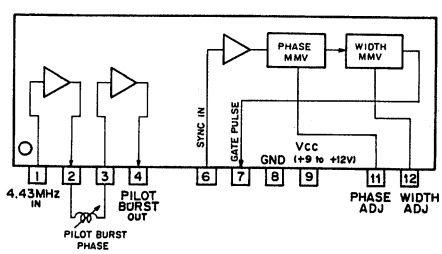

BX1263 (SONY)
PB Y RF FREQUENCY COMPENSATOR
— PRINTED SIDE VIEW —

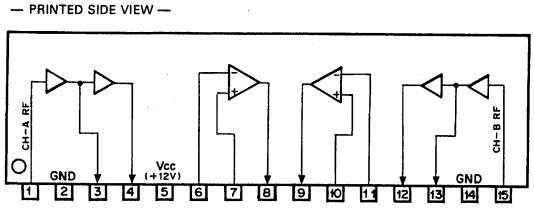

BX1264 (SONY)
ACC/APC BURST GATE PULSE GENERATOR
— PRINTED SIDE VIEW —

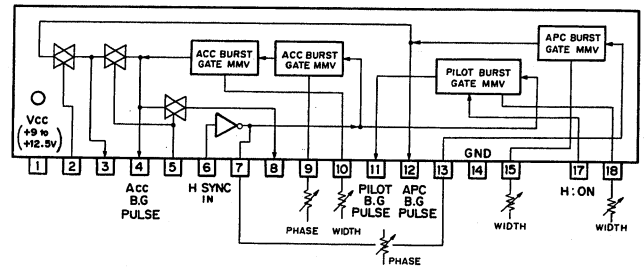

BX1266 (SONY)
Y AND DELAYED Y MIX/SYNC SEPARATOR
— PRINTED SIDE VIEW —

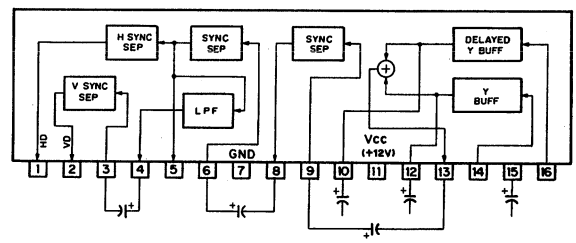

BX1267 (SONY)
DROPOUT DETECTOR/BLANKING PULSE MUTING/CLAMP
— PRINTED SIDE VIEW —

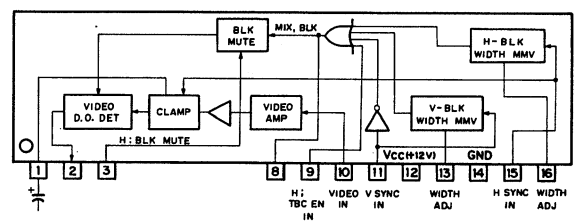

BX343 (SONY)
OSCILLATOR/DETECTOR
— REAR VIEW —

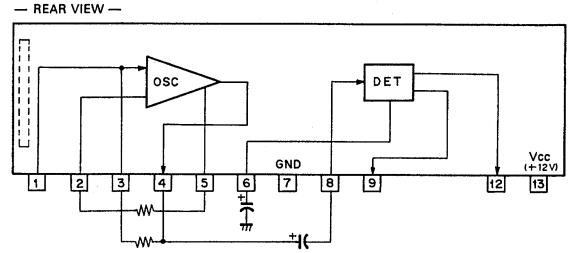

BX366A (SONY)
VIDEO BUFFER
— SIDE VIEW —

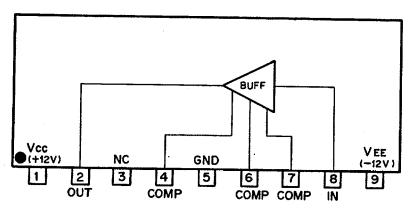

BX373 (SONY)
MIX AMP
— REAR VIEW —

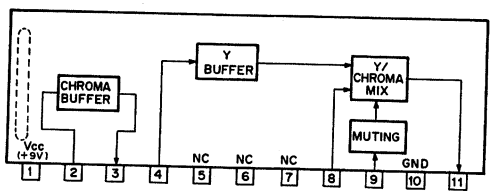

BX389 (SONY)
VIDEO AMPLIFIER
— PRINTED SIDE —

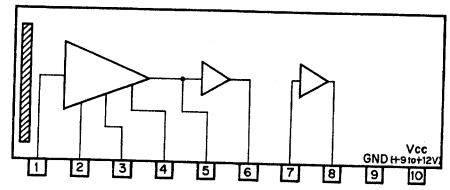

BX388 (SONY)
VIDEO AMP/VD MIXER
— PRINTED SIDE —

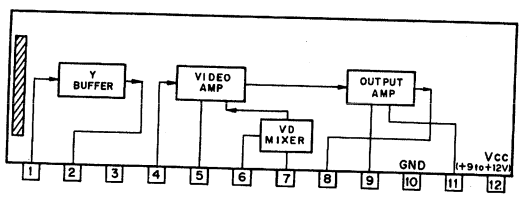

BX3914 (SONY)
CTL REC/PB AMPLIFIER
— PRINTED SIDE —

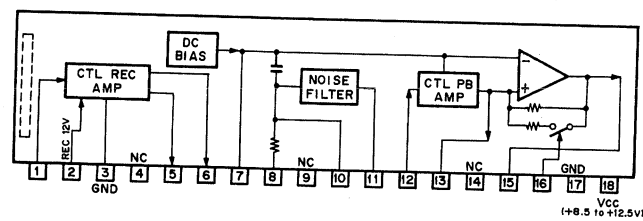

BX3949 (SONY)
COMB FILTER
— REAR VIEW —

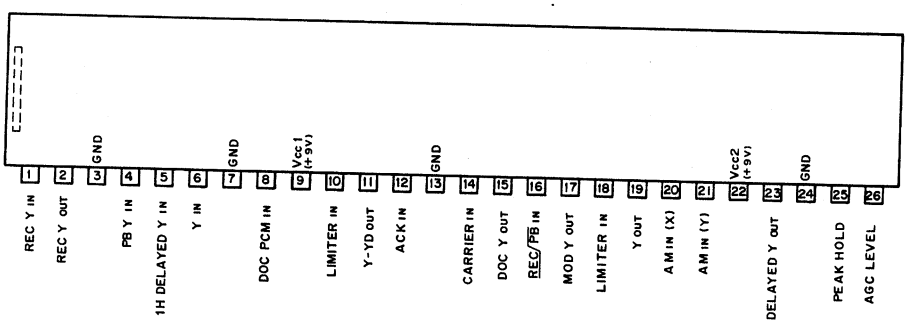

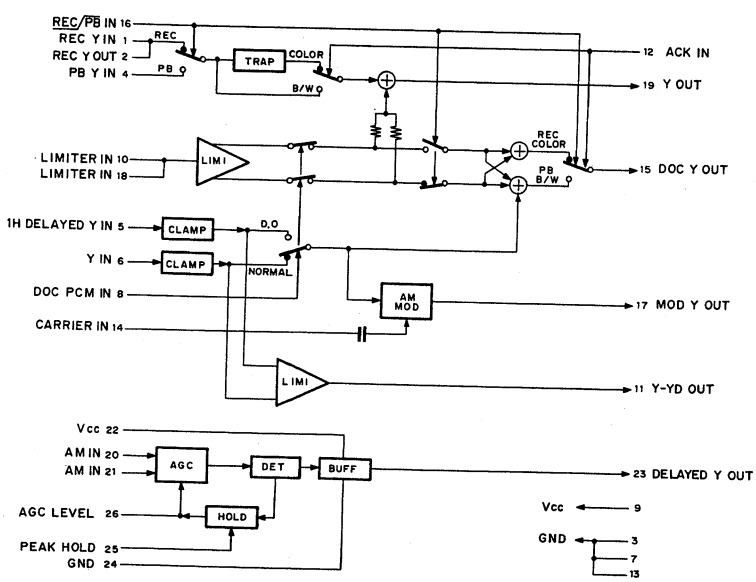

BX3915 (SONY)
SYNC SEPARATOR
— PRINTED SIDE —

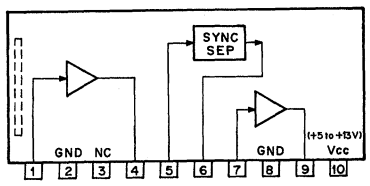

CX130 (SONY)
CX20060 (SONY)
ANALOG SWITCH
— TOP VIEW —

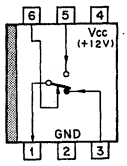

CONT. INPUT (PIN6)	SW
LOW OR OPEN	
HIGH	

CX131A (SONY)
— TOP VIEW —

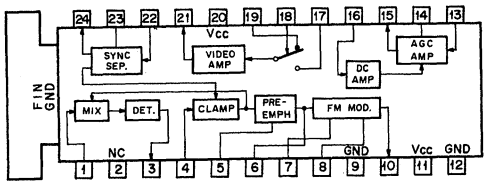

CX134A (SONY)
HEAD AMP/DROPOUT COMPENSATOR
— TOP VIEW —

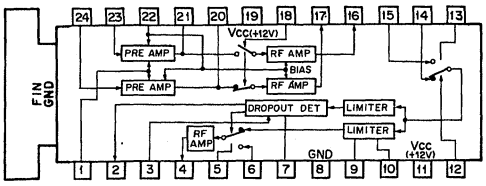

CX135 (SONY)
— TOP VIEW —

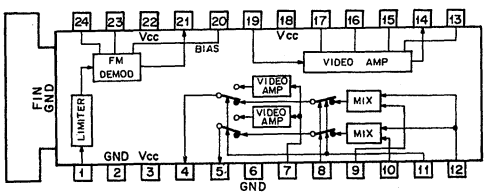

CX170 (SONY)
AUDIO POWER AMP
— TOP VIEW —

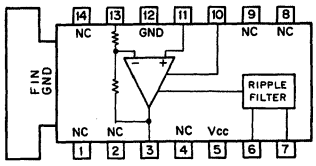

CX188
CHROMINANCE SIGNAL PROCESSER
— TOP VIEW —

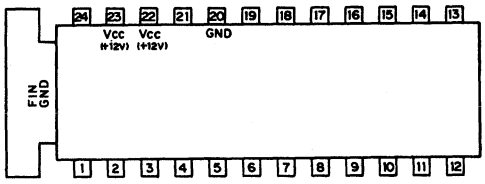

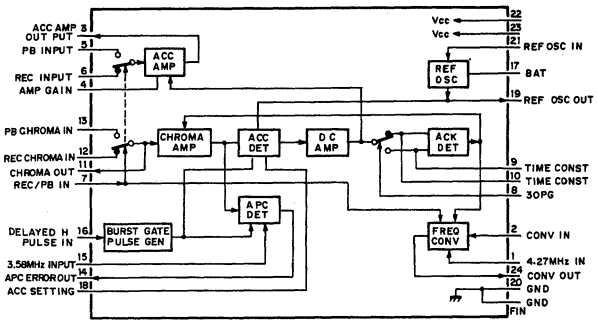

CX22013 (SONY)
DYNAMIC COMB FILTER
— TOP VIEW —

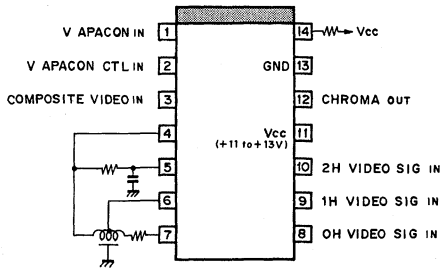

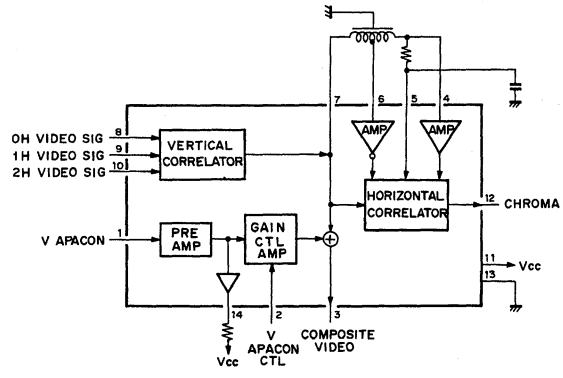

CX756A (SONY)
P-MOS VTR SYSTEM CONTROL
— TOP VIEW —

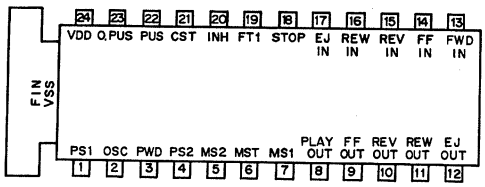

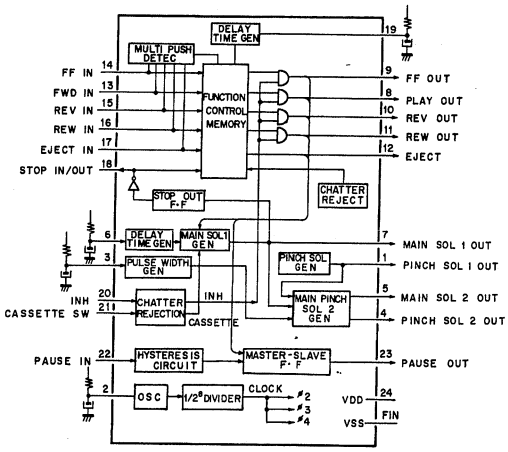

CX757 (SONY)
P-MOS VTR SYSTEM CONTROL
— TOP VIEW —

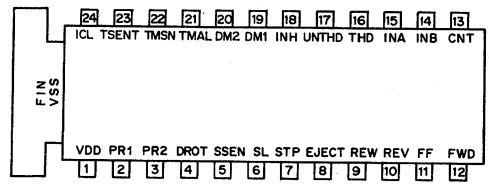

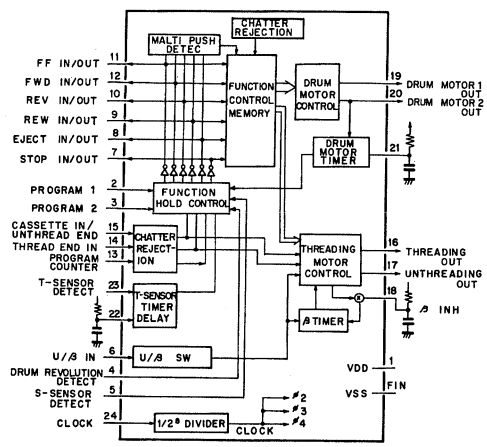

CX859 (SONY)
— TOP VIEW —

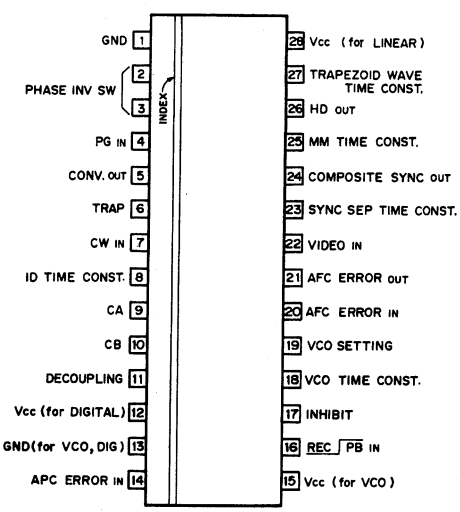

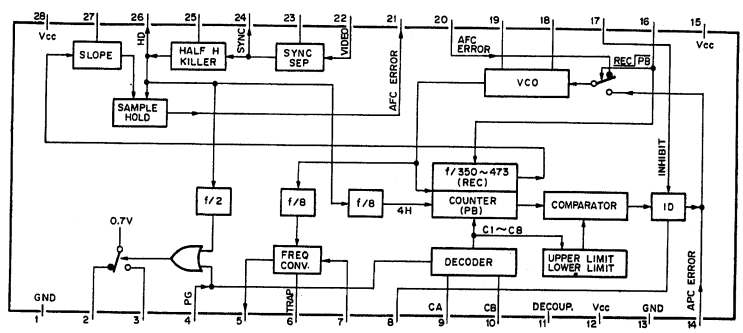

DECODER TRUTH TABLE

CA \ CB	LOW	OPEN	HIGH
LOW	C1	C7	—
OPEN	C4	C5	C6
HIGH	—	*C2 C3	C8

* PG : L--- C2
PG : H--- C3

AFC/APC PRESET DATA

	AFC COUNT DOWN	APC ID COUNT	
		UPPER LIM.	LOWER LIM.
C1	f/473	105	95
C2	f/351	129	119
C3	f/353	137	127
C4	f/351	118	104
C5	f/351	131	117
C6	f/351	144	130
C7	f/350	136	104
C8	——	125	115

CX872 (SONY)
— TOP VIEW —

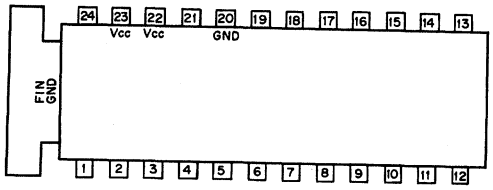

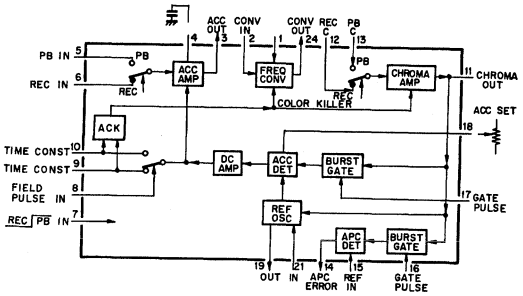

CXL5001P (SONY)
C-MOS CCD FOR NTSC 1H DELAY LINE
— TOP VIEW —

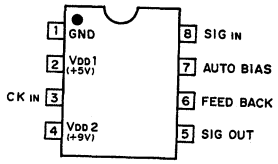

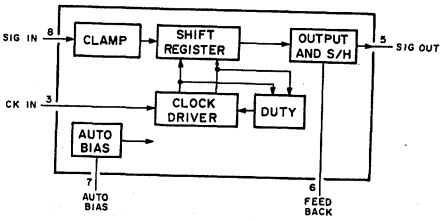

CXA1020P (SONY)
CHROMA CROSS-COLOR NOISE REDUCER/EDGE COMPENSATOR
— TOP VIEW —

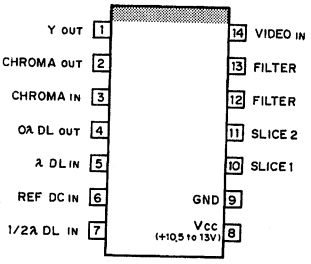

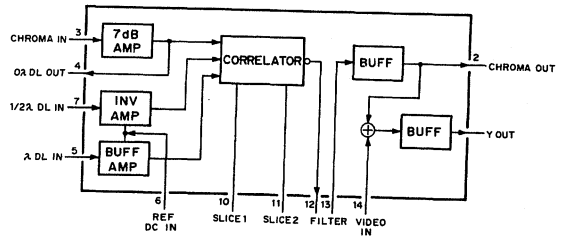

HA17902P (HITACHI)
NJM2902N (JRC)
OPERATIONAL AMPLIFIER
— TOP VIEW —

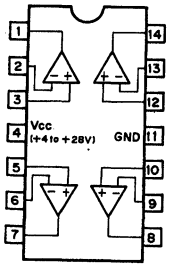

LB1261 (SANYO)
7 STAGE DRIVER WITH OPEN COLLECTOR
— TOP VIEW —

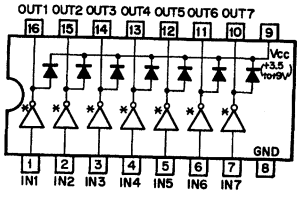

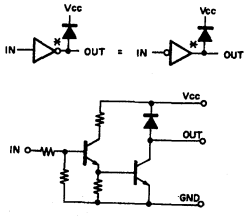

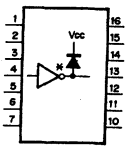

LH0080 (SHARP)
N-MOS 8-BIT MICROPROCESSOR
— TOP VIEW —

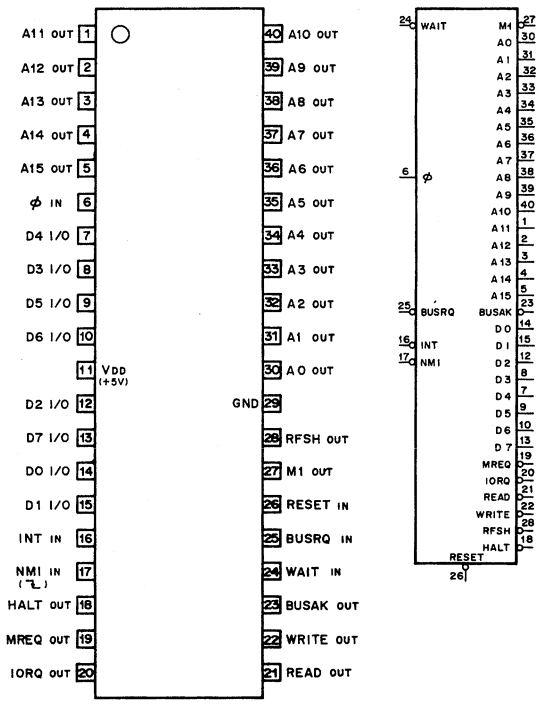

LH0084 (SHARP)
N-MOS 2-CHANNEL SERIAL INPUT/OUTPUT
FOR MICROCOMPUTER SYSTEM
— TOP VIEW —

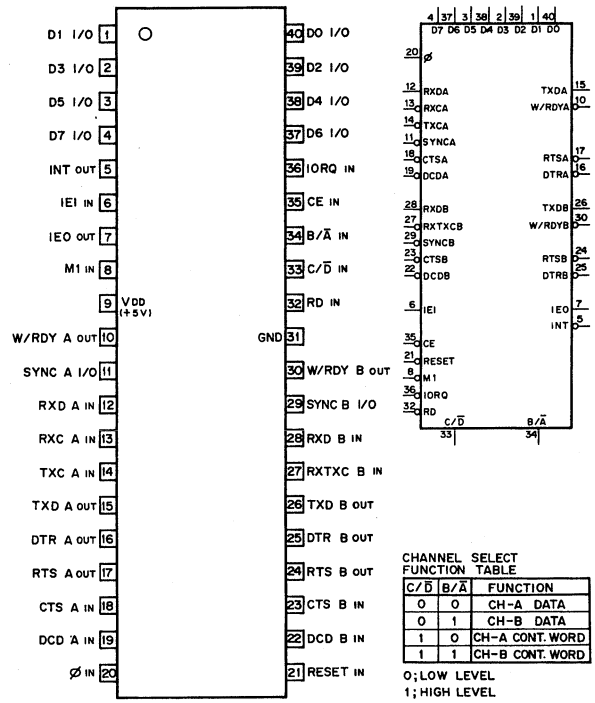

CHANNEL SELECT FUNCTION TABLE

C/D̄	B/Ā	FUNCTION
0	0	CH-A DATA
0	1	CH-B DATA
1	0	CH-A CONT. WORD
1	1	CH-B CONT. WORD

0; LOW LEVEL
1; HIGH LEVEL

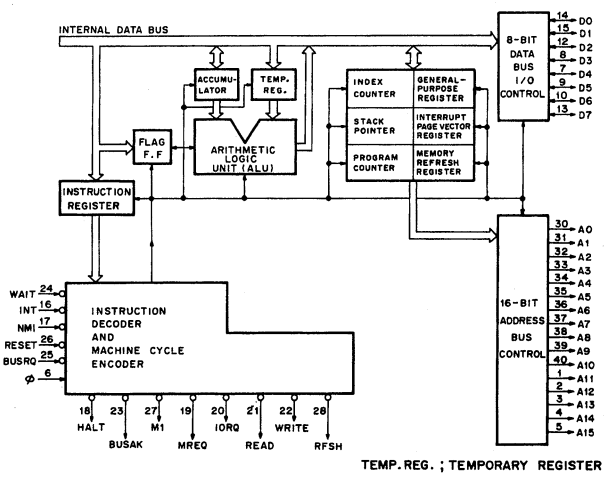

TEMP. REG. ; TEMPORARY REGISTER

Ø	; CLOCK
A0-A15	; 3-STATE ADDRESS OUTPUT
BUSAK	; BUS ACKNOWLEDGE
BUSRQ	; BUS REQUEST
D0-D7	; 3-STATE DATA INPUT/OUTPUT
HALT	; HALT STATE
INT	; INTERRUPT REQUEST
IORQ	; 3-STATE I/O REQUEST
M1	; MACHINE CYCLE 1
MREQ	; 3-STATE MEMORY REQUEST
NMI	; NON-MASKABLE INTERRUPT (DOWN EDGE TRIGGER)
READ	; 3-STATE MEMORY READ
RFSH	; REFRESH
WRITE	; 3-STATE MEMORY WRITE

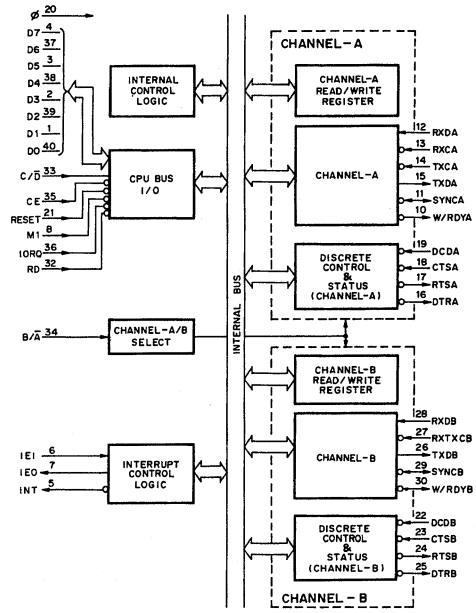

Ø	; SYSTEM CLOCK IN
D7-DO	; DATA I/O
C/D̄	; CONTROL/DATA SELECT IN
CE	; CHIP ENABLE IN
M1	; MACHINE CYCLE 1 IN
IORQ	; I/O REQUEST IN
RD	; READ IN
B/Ā	; CHANNEL B/A SELECT IN
IEI	; INTERRUPT ENABLE IN
IEO	; INTERRUPT ENABLE OUT
INT	; INTERRUPT OUT
RXD	; RECEIVE DATA IN
RXC	; RECEIVE CLOCK IN
TXC	; TRANSMIT CLOCK IN
TXD	; TRANSMIT DATA OUT
SYNC	; EXTERNAL CHARACTER SYNCHRONIZATION I/O
W/RDY	; WAIT/READY OUT
DCD	; DATA CARRIER DETECT IN
CTS	; CLEAR TO SEND IN
RTS	; REQUEST TO SEND OUT
DTR	; DATA TERMINAL READY OUT

M51841P (MITSUBISHI)
NE555N (SIGNETICS)
PRECISION TIMER
— TOP VIEW —

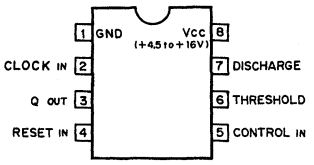

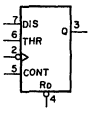

MONOSTABLE MULTIVIBRATOR

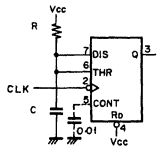

IN PUTS		OUT
Rd	CLK	Q
0	X	0
1		

0 , LOW LEVEL
1 , HIGH LEVEL
X , DON'T CARE

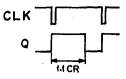

RETRIGGERABLE MONO. MULTIVIBRATOR
(MISSING PULSE DETECTOR)

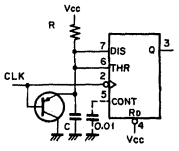

INPUTS		OUT
Rd	CLK	Q
0	X	0
1		

0 ; LOW LEVEL
1 ; HIGH LEVEL
X ; DON'T CARE

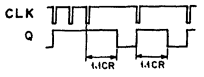

ASTABLE MULTIVIBRATOR

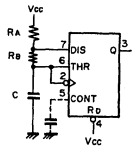

Rd	Q
0	0
1	

0 ; LOW LEVEL
1 ; HIGH LEVEL

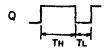

$T_H = 0.693C\,(R_A + R_B)$
$T_L = 0.693C\,R_B$

PULSE WIDTH MODULATOR

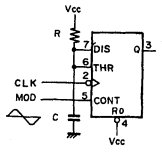

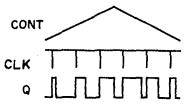

VCO
(PULSE POSITION MODULATOR)

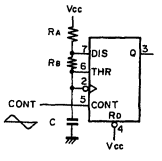

M54517P (MITSUBISHI)
INVERTER WITH OPEN-COLLECTOR
(DARLINGTON-CONNECTED TRANSISTOR ARRAY)
— TOP VIEW —

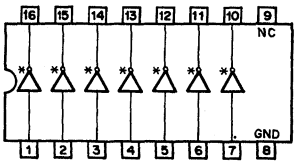

M54519P (MITSUBISHI)
7 STAGE DRIVER
— TOP VIEW —

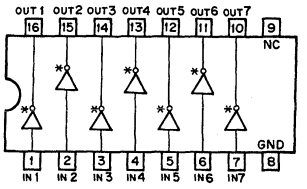

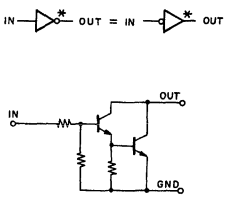

M54529P (MITSUBISHI)
TRANSISTOR ARRAY
— TOP VIEW —

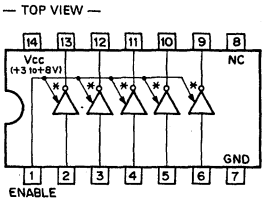

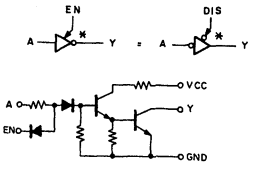

A	EN	Y
0	1	1
1	1	0
X	0	1

0 ; LOW LEVEL
1 ; HIGH LEVEL
X ; DON'T CARE
*; OPEN COLLECTOR

MB4204M (FUJITSU)
MB4204PF (FUJITSU) FLAT PACKAGE
COMPARATOR
— TOP VIEW —

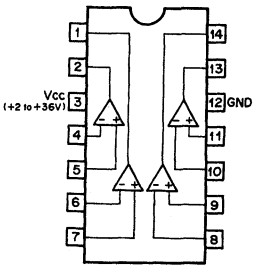

MC14584BCP (MOTOROLA)
C-MOS SCHMITT TRIGGER INVERTER
— TOP VIEW —

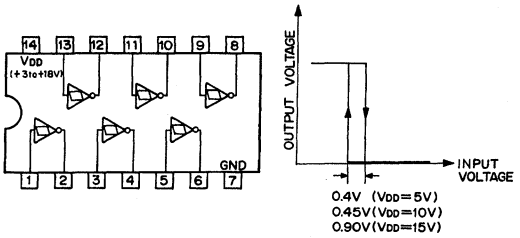

MC14598BCP (MOTOROLA)
C-MOS 8-BIT BUS-COMPATIBLE THREE-STATE LATCHES
— TOP VIEW —

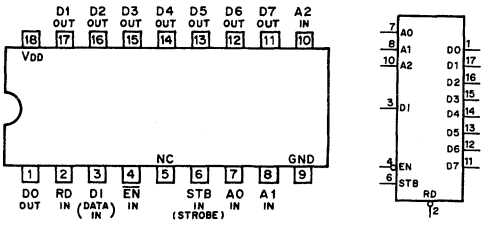

LATCH TRUTH TABLE

CONTROL INPUT			OUTPUT OF ADDRESSED LATCH	OUTPUT OF OTHER LATCHES
EN	STB	RD		
1	0	1	NO CHANGE	NO CHANGE
1	1	1	DATA	NO CHANGE
1	X	0	0	0
0	X	X	OPEN	OPEN

LATCH SELECTION

CONTROL INPUT			ADDRESSED LATCH
A2	A1	AO	
0	0	0	0
0	0	1	1
0	1	0	2
0	1	1	3
1	0	0	4
1	0	1	5
1	1	0	6
1	1	1	7

MC1495L (MOTOROLA)
FOUR-QUADRANT MULTIPLIER
— TOP VIEW —

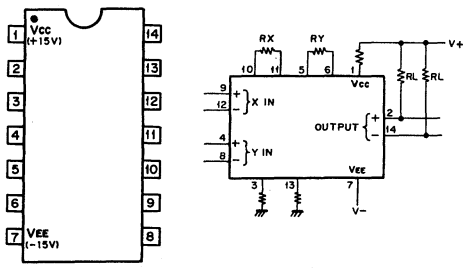

MC1496P (MOTOROLA)
BALANCED MODULATOR/DEMODULATOR
— TOP VIEW —

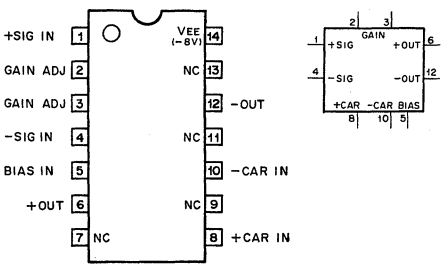

MSM2128-1AS (OKI) (ACCESS TIME = 200 nS)
N-MOS 16384(2048x8)-BIT STATIC RAM
— TOP VIEW —

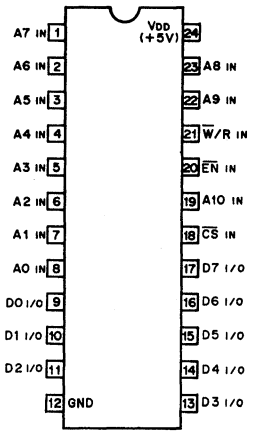

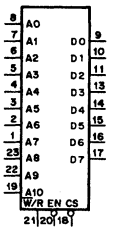

INPUTS			FUNCTION
CS	W/R	EN	
0	0	X	WRITE
0	1	0	READ
0	1	1	DISABLE (OUTPUT=HI-Z)
1	X	X	DISABLE (OUTPUT=HI-Z)

0 ; LOW LEVEL
1 ; HIGH LEVEL
D ; DON'T CARE
HI-Z ; HIGH IMPEDANCE

AO - A10 ; ADDRESS INPUTS
W/R ; WRITE / READ ENABLE
EN ; OUTPUT ENABLE
CS ; CHIP SELECT
DO - D7 ; DATA INPUTS / OUTPUTS

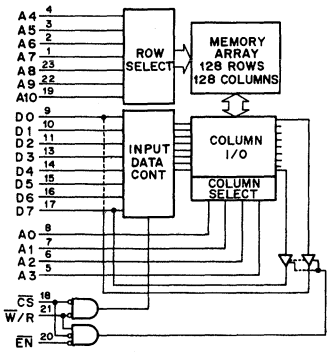

MSM2128-12RS (OKI) (ACCESS TIME = 120 nS)
MSM2128-15RS (OKI) (ACCESS TIME = 150 nS)
N-MOS 16384(2048x8)-BIT STATIC RAM
— TOP VIEW —

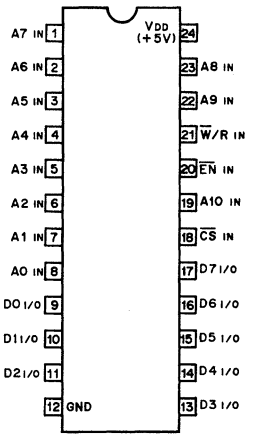

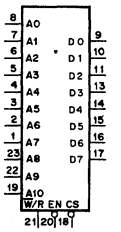

INPUTS			FUNCTION	POWER
CS	W/R	EN		
0	0	X	WRITE	ACTIVE
0	1	0	READ	
0	1	1	DISABLE	
1	X	X	OUTPUT=HI-Z	STANDBY

0 ; LOW LEVEL
1 ; HIGH LEVEL
X ; DON'T CARE
HI-Z ; HIGH IMPEDANCE

AO - A10 ; ADDRESS INPUTS
W/R ; WRITE / READ ENABLE
EN ; OUTPUT ENABLE
CS ; CHIP SELECT
DO - D7 ; DATA INPUTS / OUTPUTS

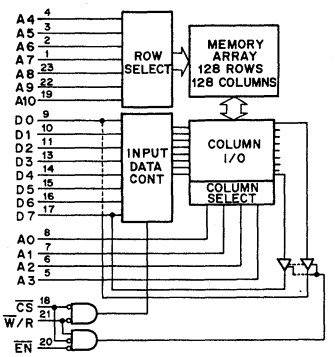

NJM2041M-D (JRC) FLAT PACKAGE
OPERATIONAL AMPLIFIER
— TOP VIEW —

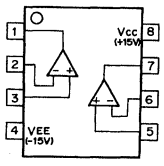

NJM2043D-D (JRC)
OPERATIONAL AMPLIFIER
— TOP VIEW —

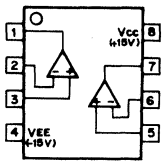

SN7407N (TI)
TTL BUFFER/DRIVER WITH OPEN-COLLECTOR
— TOP VIEW —

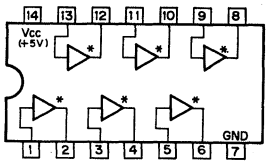

A	Y
0	0
1	1

0 ; LOW LEVEL
1 ; HIGH LEVEL
* ; OPEN COLLECTOR

NJM2903D (JRC)
VOLTAGE COMPARATOR
— TOP VIEW —

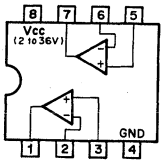

NJM4558D (JRC)
uPC4558C (NEC)
OPERATIONAL AMPLIFIER
— TOP VIEW —

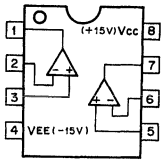

SN74LS05N (TI)
TTL INVERTER WITH OPEN-COLLECTOR
— TOP VIEW —

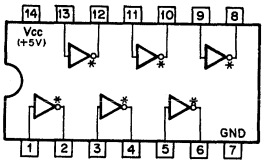

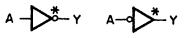

Y = $\overline{A}$

A	Y
0	1
1	0

0 ; LOW LEVEL
1 ; HIGH LEVEL
* ; OPEN COLLECTOR

NJM4560DD (JRC)
OPERATIONAL AMPLIFIER
— TOP VIEW —

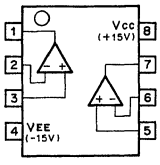

NJM4562D (JRC)
OPERATIONAL AMPLIFIER
— TOP VIEW —

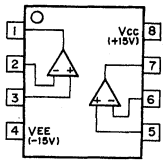

SN74LS138N (TI)
TTL 3-TO-8-LINE DECODER/DEMULTIPLEXER
— TOP VIEW —

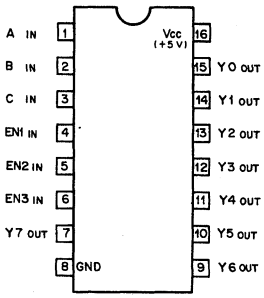

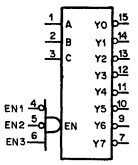

INPUTS				OUTPUTS							
EN	C	B	A	Y7	Y6	Y5	Y4	Y3	Y2	Y1	Y0
0	X	X	X	1	1	1	1	1	1	1	1
1	0	0	0	1	1	1	1	1	1	1	0
1	0	0	1	1	1	1	1	1	1	0	1
1	0	1	0	1	1	1	1	1	0	1	1
1	0	1	1	1	1	1	1	0	1	1	1
1	1	0	0	1	1	1	0	1	1	1	1
1	1	0	1	1	1	0	1	1	1	1	1
1	1	1	0	1	0	1	1	1	1	1	1
1	1	1	1	0	1	1	1	1	1	1	1

EN = $\overline{EN1} \cdot \overline{EN2} \cdot \overline{EN3}$

0 ; LOW LEVEL
1 ; HIGH LEVEL
X ; DON'T CARE

NJM78L??A (JRC)
NJM78L05A
POSITIVE VOLTAGE REGULATOR (100mA)

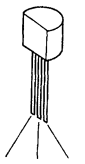

OUTPUT VOLTAGE	PP
2V	02
5V	05
6V	06
8V	08
9V	09
12V	12
15V	15

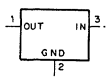

SN74LS139N (TI)
TTL 2-TO-4-LINE DECODER/DEMULTIPLEXER
— TOP VIEW —

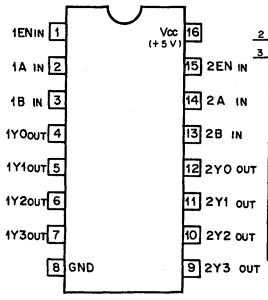

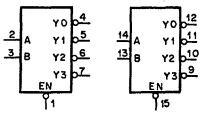

INPUTS			OUTPUTS			
EN	B	A	Y3	Y2	Y1	Y0
0	0	0	1	1	1	0
0	0	1	1	1	0	1
0	1	0	1	0	1	1
0	1	1	0	1	1	1
1	X	X	1	1	1	1

0 ; LOW LEVEL
1 ; HIGH LEVEL
X ; DON'T CARE

SN74LS156N (TI)

TTL DUAL 2-LINE-TO-4-LINE DECODER/DEMULTIPLEXER (OPEN COLLECTOR OUTPUT)

— TOP VIEW —

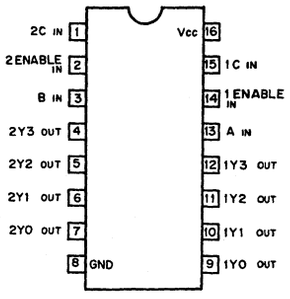

DUAL 2-LINE-TO-4-LINE DECODER
OR DUAL 1-LINE-TO-4-LINE DEMULTIPLEXER

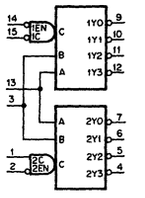

INPUTS				OUTPUTS			
ENABLE 1EN	DATA 1C	SELECT B	A	1 Y3	1 Y2	1 Y1	1 Y0
0	0	0	0	1	1	1	0
0	0	0	1	1	1	0	1
0	0	1	0	1	0	1	1
0	0	1	1	0	1	1	1
X	1	X	X	1	1	1	1
1	X	X	X	1	1	1	1

INPUTS				OUTPUTS			
ENABLE 2EN	DATA 2C	SELECT B	A	2 Y3	2 Y2	2 Y1	2 Y0
0	1	0	0	1	1	1	0
0	1	0	1	1	1	0	1
0	1	1	0	1	0	1	1
0	1	1	1	0	1	1	1
X	0	X	X	1	1	1	1
1	X	X	X	1	1	1	1

3-LINE-TO-8-LINE DECODER
OR 1-LINE-TO-8-LINE DEMULTIPLEXER

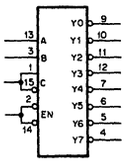

INPUTS				OUTPUTS							
ENABLE/DATA EN	SELECT C	B	A	Y7	Y6	Y5	Y4	Y3	Y2	Y1	Y0
0	0	0	0	1	1	1	1	1	1	1	0
0	0	0	1	1	1	1	1	1	1	0	1
0	0	1	0	1	1	1	1	1	0	1	1
0	0	1	1	1	1	1	1	0	1	1	1
0	1	0	0	1	1	1	1	1	1	1	1
0	1	0	1	1	1	1	0	1	1	1	1
0	1	1	0	1	1	0	1	1	1	1	1
0	1	1	1	0	1	1	1	1	1	1	1
1	X	X	X	1	1	1	1	1	1	1	1

SN74LS158N (TI)

TTL 2-LINE-TO-1-LINE INVERTED DATA SELECTOR/MULTIPLEXER

— TOP VIEW —

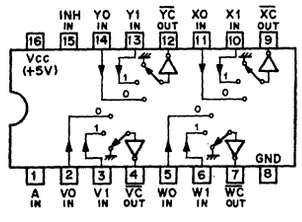

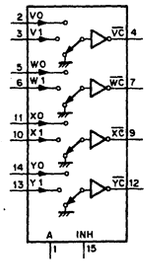

CONT. IN		ON CHANNEL
INH	A	
0	0	0
0	1	1
1	X	GND

0; LOW LEVEL
1; HIGH LEVEL
X; DON'T CARE

SN74LS221NS (TI) FLAT PACKAGE

TTL MONOSTABLE MULTIVIBRATOR WITH SCHMITT TRIGGER INPUT

— TOP VIEW —

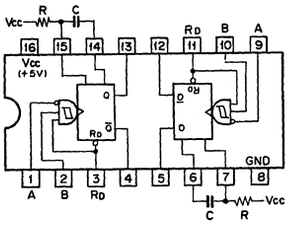

INPUTS			OUTPUTS	
RD	A	B	Q	Q̄
0	X	X	0	1
X	1	X	0	1
X	X	0	0	1
1	0	↑	⊓	⊓
1	↓	1	⊓	⊓
↑	0	1	⊓	⊓

0; LOW LEVEL
1; HIGH LEVEL
X; DON'T CARE

OUTPUT PULSE WIDTH = 0.7CR

M74LS244P (MITSUBISHI)
SN74LS244N (TI)

TTL 3-STATE SCHMITT TRIGGER BUFFER/DRIVER

— TOP VIEW —

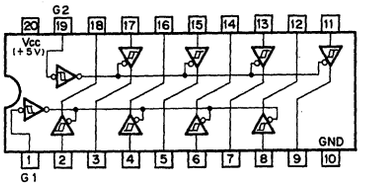

G	A	Y
0	0	0
0	1	1
1	X	HI-Z

0; LOW LEVEL
1; HIGH LEVEL
X; DON'T CARE
HI-Z; HIGH IMPEDANCE

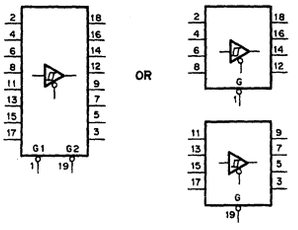

SN74LS32N (TI)

TTL 2-INPUT POSITIVE-OR GATE

— TOP VIEW —

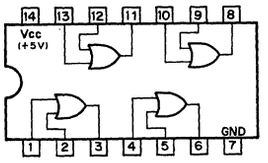

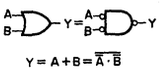

A	B	Y
0	0	0
0	1	1
1	0	1
1	1	1

0; LOW LEVEL
1; HIGH LEVEL

SN74LS377N (TI)

TTL D-TYPE FLIP-FLOP WITH ENABLE

— TOP VIEW —

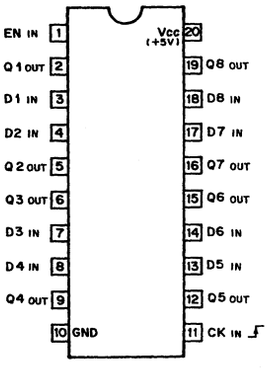

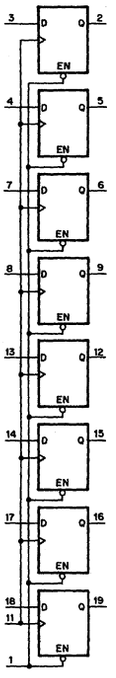

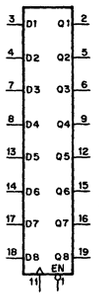

EACH FLIP-FLOP

INPUTS			OUT
EN	CK	D	Q
1	X	X	Q0
0	⊓	1	1
0	⊓	0	0
X	0	X	Q0

0; LOW LEVEL
1; HIGH LEVEL
X; DON'T CARE

SN74LS378N (TI)
TTL D-TYPE FLIP-FLOP WITH ENABLE
— TOP VIEW —

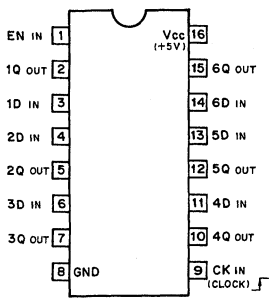

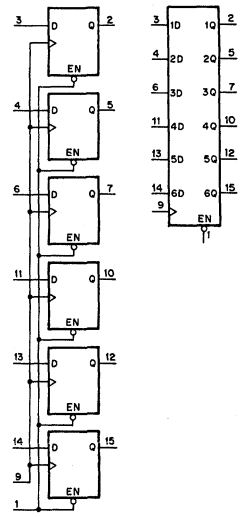

EACH FLIP-FLOP

INPUTS			OUT
EN	CK	D	Q
1	X	X	Qo
0	↓	1	1
0	↓	0	0
X	0	X	Qo

0 ; LOW LEVEL
1 ; HIGH LEVEL
X ; DON'T CARE

SN74LS74AN (TI)
TTL D-TYPE FLIP FLOP WITH DIRECT SET/RESET
— TOP VIEW —

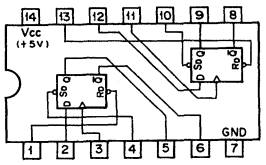

INPUTS				OUTPUTS	
So	Ro	CK	D	Qn+1	$\overline{Qn+1}$
0	1	X	X	1	0
1	0	X	X	0	1
0	0	X	X	1*	1*
1	1	↓	1	1	0
1	1	↓	0	0	1
1	1	0	X	Qn	$\overline{Qn}$

0; LOW LEVEL
1 ; HIGH LEVEL
X; DON'T CARE
1*; NONSTABLE

SN16913P (TI)
BALANCED MIXER
— TOP VIEW —

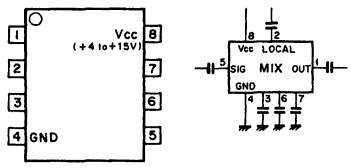

SN74HC74N (TI)
C-MOS D-TYPE FLIP FLOP WITH DIRECT SET/RESET
— TOP VIEW —

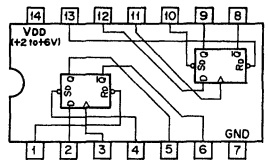

INPUTS				OUTPUTS	
So	Ro	CK	D	Qn+1	$\overline{Qn+1}$
0	1	X	X	1	0
1	0	X	X	0	1
0	0	X	X	1*	1*
1	1	↓	1	1	0
1	1	↓	0	0	1
1	1	0	X	Qn	$\overline{Qn}$

0; LOW LEVEL
1 ; HIGH LEVEL
X; DON'T CARE
1*; NONSTABLE

TA7060AP (TOSHIBA)
LINEAR AMP
— SIDE VIEW —

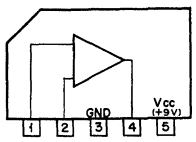

TA7076P (TOSHIBA)
DOUBLE BALANCED DETECTOR
— TOP VIEW —

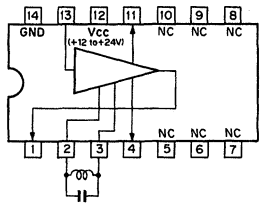

TA7357AP (TOSHIBA)
SYNC SEPARATOR/HD PULSE GENERATOR
— SIDE VIEW —

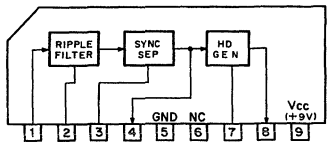

HD14001BP (HITACHI)
MB84001B (FUJITSU)
MC14001BCP (MOTOROLA)
MSM4001 (OKI)
TC4001BF (TOSHIBA) FLAT PACKAGE
TC4001BP (TOSHIBA)
TC4001UBP (TOSHIBA)
uPD4001BC (NEC)
C-MOS 2-INPUT NOR GATE
— TOP VIEW —

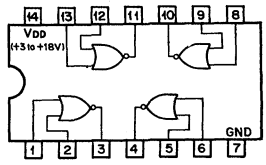

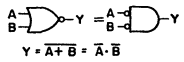

A	B	Y
0	0	1
0	1	0
1	0	0
1	1	0

0; LOW LEVEL
1; HIGH LEVEL

TC4009UBP (TOSHIBA)
C-MOS INVERTING TYPE BUFFER/CONVERTER (TO TTL LEVEL)
— TOP VIEW —

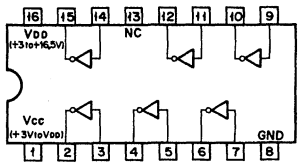

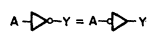

A	Y
0	1
1	0

HD14011BP (HITACHI)
MB84011B (FUJITSU)
MSM4011RS (OKI)
TC4011BF (TOSHIBA) FLAT PACKAGE
TC4011BP (TOSHIBA)
uPD4011BC (NEC)
C-MOS 2-INPUT NAND GATE
— TOP VIEW —

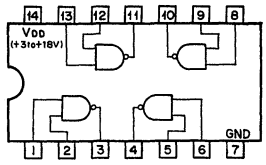

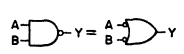

A	B	Y
0	0	1
0	1	1
1	0	1
1	1	0

0:LOW LEVEL
1:HIGH LEVEL

TC4012BP (TOSHIBA)
C-MOS 4-INPUT NAND GATE
— TOP VIEW —

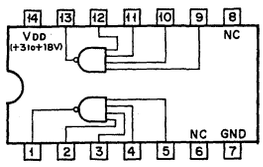

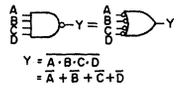

A	B	C	D	Y
X	X	X	0	1
X	X	0	X	1
X	0	X	X	1
0	X	X	X	1
1	1	1	1	0

0; LOW LEVEL
1; HIGH LEVEL
X; DON'T CARE

MB84013B (FUJITSU)
uPD4013C (NEC)
C-MOS D-TYPE FLIP-FLOP WITH DIRECT SET/RESET
— TOP VIEW —

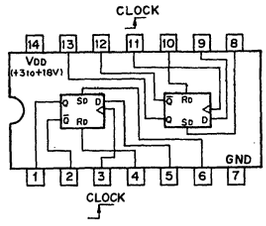

DIRECT R-S FLIP FLOP

Sd	Rd	Q	$\overline{Q}$
0	0	On	$\overline{On}$
0	1	0	1
1	0	1	0
1	1	1	1

D-TYPE FLIP FLOP

CKn	CKn+1
D	Q
0	0
1	1

0; LOW LEVEL
1; HIGH LEVEL
CLOCK CK; ⌐¬
CKn; BEFORE CLOCK
CKn+1; AFTER CLOCK

TC4013BF (TOSHIBA) FLAT PACKAGE
TC4013BP (TOSHIBA)
TC504013BF (TOSHIBA) FLAT PACKAGE
TC504013BP (TOSHIBA)
C-MOS D-TYPE FLIP FLOP WITH DIRECT SET/RESET
— TOP VIEW —

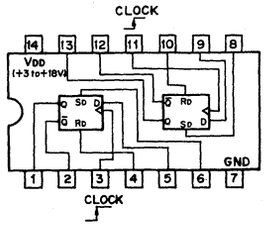

DIRECT R-S FLIP FLOP

Sd	Rd	Q	$\overline{Q}$
0	0	On	$\overline{On}$
0	1	0	1
1	0	1	0
1	1	0	1

D-TYPE FLIP FLOP

CKn	CKn+1
D	Q
0	0
1	1

CLOCK CK; ⌐¬
CKn; BEFORE CLOCK
CKn+1; AFTER CLOCK
0; LOW LEVEL
1; HIGH LEVEL

TC4015BF (TOSHIBA) FLAT PACKAGE
TC4015BP (TOSHIBA)
C-MOS DUAL 4-STAGE STATIC SHIFT REGISTER WITH DIRECT RESET
— TOP VIEW —

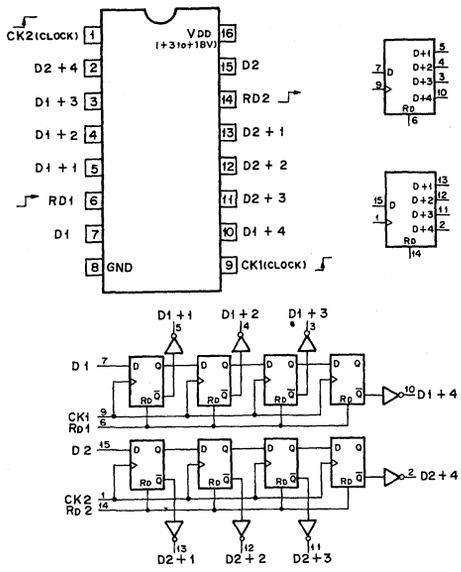

TC40161BP (TOSHIBA)
C-MOS PRESETTABLE SYNCHRONOUS 4-BIT BINARY COUNTER WITH ASYNCHRONOUS RESET
— TOP VIEW —

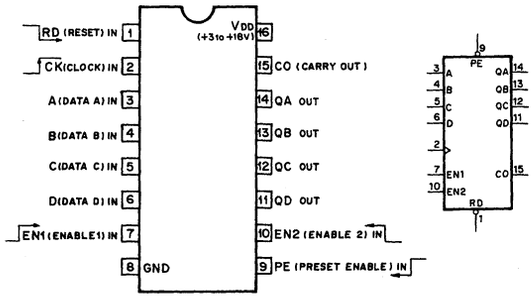

MODE SELECTION

CONTROL INPUTS				MODE
RD	PE	EN1	EN2	
0	X	X	X	RESET (ASYNCHRONOUS)
1	0	X	X	PRESET (SYNCHRONOUS)
1	1	0	X	NO COUNT
1	1	X	0	NO COUNT
1	1	1	1	COUNT

CARRY OUTPUT "CO"

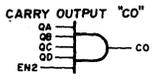

CO IS HIGH WHEN EN2 INPUT IS HIGH AND COUNT IS "15".

COUNT SEQUENCE

COUNT	OUTPUTS			
	QD	QC	QB	QA
0	0	0	0	0
1	0	0	0	1
2	0	0	1	0
3	0	0	1	1
4	0	1	0	0
5	0	1	0	1
6	0	1	1	0
7	0	1	1	1
8	1	0	0	0
9	1	0	0	1
10	1	0	1	0
11	1	0	1	1
12	1	1	0	0
13	1	1	0	1
14	1	1	1	0
15	1	1	1	1

0; LOW LEVEL
1; HIGH LEVEL
X; DON'T CARE

TC4020BP (TOSHIBA)
C-MOS 14-STAGE RIPPLE-CARRY BINARY COUNTER/DRIVER
— TOP VIEW —

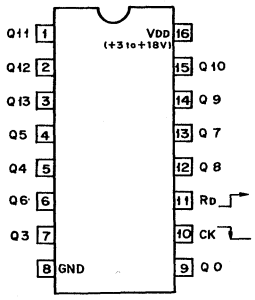

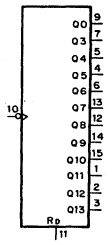

RD	Q13-Q0
1	ALL LOW
0	COUNT

COUNT		BINARY OUTPUTS											
		Q13	Q12	Q11	Q10	Q9	Q8	Q7	Q6	Q5	Q4	Q3	Q0
0	0000	0	0	0	0	0	0	0	0	0	0	0	0
1	0001	0	0	0	0	0	0	0	0	0	0	0	1
2	0002	0	0	0	0	0	0	0	0	0	0	0	0
3	0003	0	0	0	0	0	0	0	0	0	0	0	1
4	0004	0	0	0	0	0	0	0	0	0	0	0	0
16380	4FFC	1	1	1	1	1	1	1	1	1	1	1	0
16381	4FFD	1	1	1	1	1	1	1	1	1	1	1	1
16382	4FFE	1	1	1	1	1	1	1	1	1	1	1	0
16383	4FFF	1	1	1	1	1	1	1	1	1	1	1	1

IN HEXADECIMAL
IN DECIMAL
0; LOW LEVEL
1; HIGH LEVEL

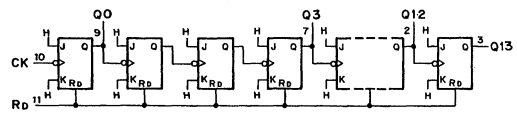

TC4023BF (TOSHIBA) FLAT PACKAGE
TC4023BP (TOSHIBA)
uPD4023C (NEC)
C-MOS 3-INPUT NAND GATE
— TOP VIEW —

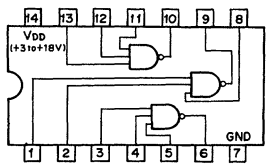

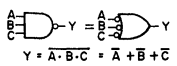

A	B	C	Y
X	X	0	1
X	0	X	1
0	X	X	1
1	1	1	0

0; LOW LEVEL
1; HIGH LEVEL
X; DON'T CARE

TC4025BP (TOSHIBA)
C-MOS 3-INPUT NOR GATE
— TOP VIEW —

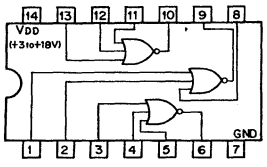

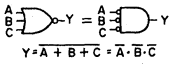

A	B	C	Y
0	0	0	1
X	X	1	0
X	1	X	0
1	X	X	0

uPD4027C (NEC)
C-MOS J-K MASTER SLAVE FLIP-FLOP WITH DIRECT SET/RESET
— TOP VIEW —

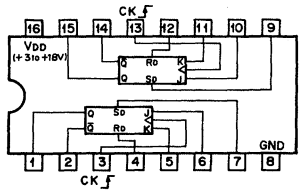

DIRECT R-S FLIP FLOP

So	Rd	Q
0	0	Qn
0	1	0
1	0	1
1	1	1

J-K FLIP FLOP

tn	tn+1
J	K	Q
0	0	Qn
0	1	0
1	0	1
1	1	$\overline{Qn}$

0; LOW LEVEL
1; HIGH LEVEL
CK; tn; BEFORE CLOCK, tn+1; AFTER CLOCK

TC4027BF (TOSHIBA) FLAT PACKAGE
TC4027BP (TOSHIBA)
TC504027BF (TOSHIBA)
TC504027BP (TOSHIBA)
C-MOS J-K MASTER SLAVE FLIP-FLOP WITH DIRECT SET/RESET
— TOP VIEW —

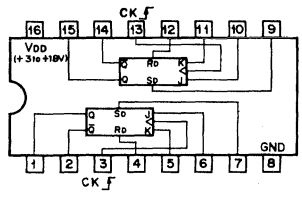

DIRECT R-S FLIP FLOP

So	Rd	Q
0	0	Qn
0	1	0
1	0	1
1	1	0

J-K FLIP FLOP

tn	tn+1
J	K	Q
0	0	Qn
0	1	0
1	0	1
1	1	$\overline{Qn}$

0; LOW LEVEL
1; HIGH LEVEL
CK; tn; BEFORE CLOCK, tn+1; AFTER CLOCK

TC4030BP (TOSHIBA)
C-MOS EXCLUSIVE OR GATE
— TOP VIEW —

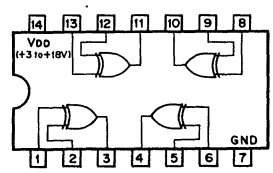

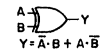

A	B	Y
0	0	0
0	1	1
1	0	1
1	1	0

0; LOW LEVEL
1; HIGH LEVEL

TC4043BP (TOSHIBA)
C-MOS 3-STATE OUTPUT NOR R-S LATCH
— TOP VIEW —

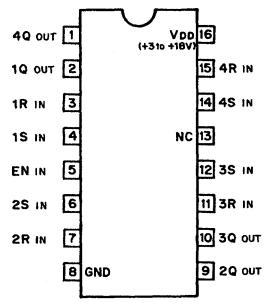

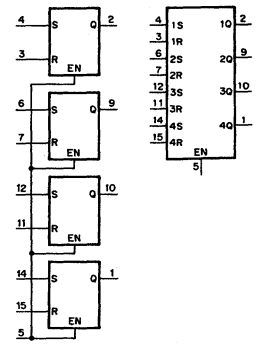

EN	S	R	Q
0	X	X	HIGH IMPEDANCE
1	0	0	NO CHANGE
1	0	1	0
1	1	0	1
1	1	1	1

0; LOW LEVEL
1; HIGH LEVEL
X; DON'T CARE

TC4052BP (TOSHIBA)
C-MOS 4-CHANNEL MULTIPLEXER/DEMULTIPLEXER
— TOP VIEW —

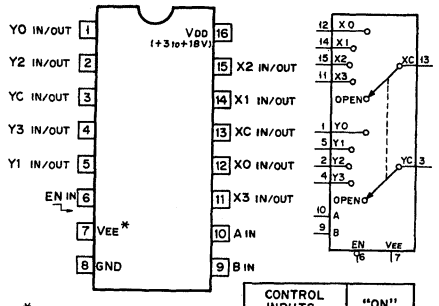

VEE* ; VDD − VEE = +3 to +18V

CONTROL INPUTS			"ON" CHANNEL
EN	B	A	
0	0	0	0
0	0	1	1
0	1	0	2
0	1	1	3
1	X	X	OPEN

0 ; LOW LEVEL
1 ; HIGH LEVEL
X ; DON'T CARE.

MB84053B (FUJITSU)
TC4053BP (TOSHIBA)
C-MOS 2-CHANNEL MULTIPLEXER/DEMULTIPLEXER
— TOP VIEW —

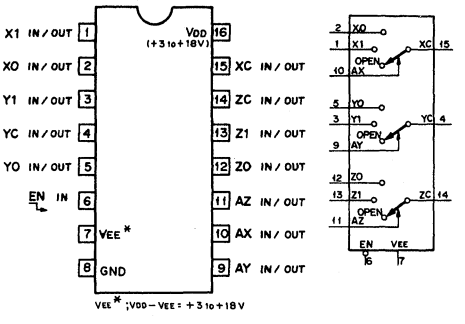

VEE* ; VDD − VEE = +3 to +18V

CONT. INPUTS		ON CHANNEL
EN	A (X, Y, Z)	
0	0	0
0	1	1
1	X	OPEN

0 ; LOW LEVEL
1 ; HIGH LEVEL
X ; DON'T CARE.

HD14066BP (HITACHI)
TC4066BP (TOSHIBA)
C-MOS BILATERAL ANALOG SWITCH
— TOP VIEW —

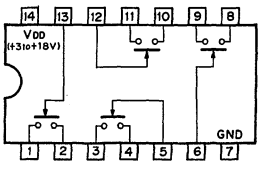

CONT IN	SW
0	OFF
1	ON

0 ; LOW LEVEL
1 ; HIGH LEVEL

TC4068BP (TOSHIBA)
C-MOS 8-INPUT NAND GATE
— TOP VIEW —

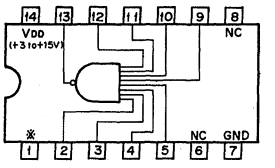

※ --- INTERNAL CONNECTION
DON'T USE

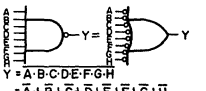

$Y = \overline{A \cdot B \cdot C \cdot D \cdot E \cdot F \cdot G \cdot H}$
$= \overline{A} + \overline{B} + \overline{C} + \overline{D} + \overline{E} + \overline{F} + \overline{G} + \overline{H}$

A	B	C	D	E	F	G	H	Y
X	X	X	X	X	X	X	0	1
X	X	X	X	X	X	0	X	1
X	X	X	X	X	0	X	X	1
X	X	X	X	0	X	X	X	1
X	X	X	0	X	X	X	X	1
X	X	0	X	X	X	X	X	1
X	0	X	X	X	X	X	X	1
0	X	X	X	X	X	X	X	1
1	1	1	1	1	1	1	1	0

0 ; LOW LEVEL
1 ; HIGH LEVEL
X ; DON'T CARE

HD14069UBP (HITACHI)
MB84069B (FUJITSU)
TC4069UBF (TOSHIBA) FLAT PACKAGE
TC4069UBP (TOSHIBA)
uPD4069UBC (NEC)
C-MOS INVERTER
— TOP VIEW —

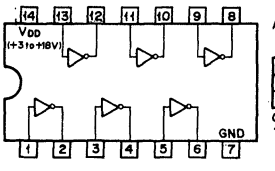

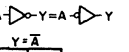

$Y = \overline{A}$

A	Y
0	1
1	0

0 ; LOW LEVEL
1 ; HIGH LEVEL

MB84070B (FUJITSU)
C-MOS EXCLUSIVE OR GATE
— TOP VIEW —

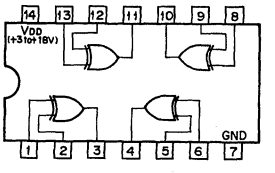

$Y = \overline{A} \cdot B + A \cdot \overline{B}$

A	B	Y
0	0	0
0	1	1
1	0	1
1	1	0

0 ; LOW LEVEL
1 ; HIGH LEVEL

TC4071BP (TOSHIBA)
uPD4071BC (NEC)
C-MOS 2-INPUT OR GATE
— TOP VIEW —

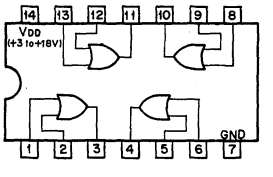

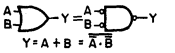

$Y = A + B = \overline{\overline{A} \cdot \overline{B}}$

A	B	Y
0	0	0
0	1	1
1	0	1
1	1	1

0 ; LOW LEVEL
1 ; HIGH LEVEL

TC4072BP (TOSHIBA)
C-MOS 4-INPUT OR GATE
— TOP VIEW —

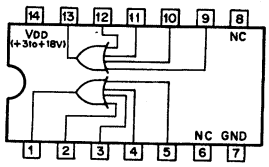

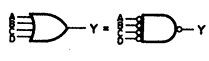

$Y = A+B+C+D = \overline{\overline{A}\cdot\overline{B}\cdot\overline{C}\cdot\overline{D}}$

D	C	B	A	Y
0	0	0	0	0
X	X	X	1	1
X	X	1	X	1
X	1	X	X	1
1	X	X	X	1

0; LOW LEVEL
1; HIGH LEVEL
X; DON'T CARE

TC4073BP (TOSHIBA)
C-MOS 3-INPUT POSITIVE AND GATE
— TOP VIEW —

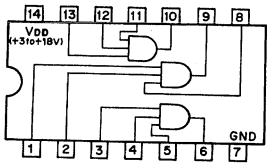

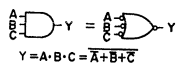

$Y = A\cdot B\cdot C = \overline{\overline{A}+\overline{B}+\overline{C}}$

A	B	C	Y
X	X	0	0
X	0	X	0
0	X	X	0
1	1	1	1

0 ; LOW LEVEL
1 ; HIGH LEVEL
X ; DON'T CARE

TC4075BP (TOSHIBA)
C-MOS 3-INPUT OR GATE
— TOP VIEW —

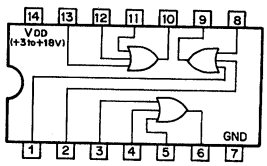

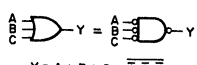

$Y = A + B + C = \overline{\overline{A}\cdot\overline{B}\cdot\overline{C}}$

C	B	A	Y
0	0	0	0
X	X	1	1
X	1	X	1
1	X	X	1

0 ; LOW LEVEL
1 ; HIGH LEVEL
X ; DON'T CARE

MB84077B (FUJITSU)
MC14077BCP (MOTOROLA)
TC4077BP (TOSHIBA)
C-MOS EXCLUSIVE NOR GATE
— TOP VIEW —

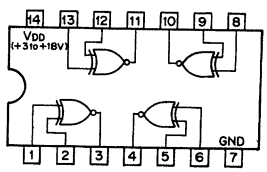

A	B	Y
0	0	1
0	1	0
1	0	0
1	1	1

0; LOW LEVEL
1; HIGH LEVEL

TC4078BP (TOSHIBA)
uPD4078BC (NEC)
C-MOS 8-INPUT NOR GATE
— TOP VIEW —

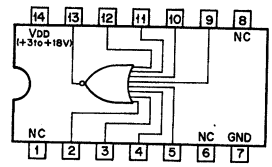

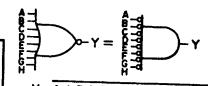

$Y = \overline{A+B+C+D+E+F+G+H} = \overline{A}\cdot\overline{B}\cdot\overline{C}\cdot\overline{D}\cdot\overline{E}\cdot\overline{F}\cdot\overline{G}\cdot\overline{H}$

A	B	C	D	E	F	G	H	Y
0	0	0	0	0	0	0	0	1
0	0	0	0	0	0	0	1	0
0	0	0	0	0	0	1	0	0
0	0	0	0	0	0	1	1	0
:	:	:	:	:	:	:	:	0
1	1	1	1	1	1	1	0	0
1	1	1	1	1	1	1	1	0

0; LOW LEVEL
1; HIGH LEVEL

TC4081BF (TOSHIBA) FLAT PACKAGE
TC4081BP (TOSHIBA)
uPD4081BC (NEC)
C-MOS 2-INPUT AND GATE
— TOP VIEW —

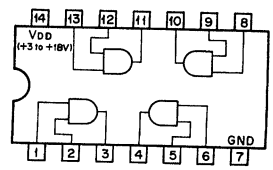

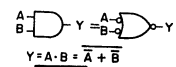

$Y = A\cdot B = \overline{\overline{A}+\overline{B}}$

A	B	Y
0	0	0
0	1	0
1	0	0
1	1	1

0; LOW LEVEL
1; HIGH LEVEL

TC4082BP
C-MOS 4-INPUT AND GATE
— TOP VIEW —

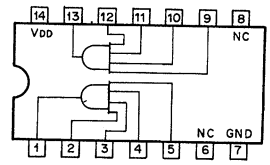

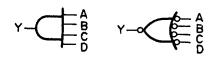

$Y = ABCD = \overline{\overline{A}+\overline{B}+\overline{C}+\overline{D}}$

D	C	B	A	Y
X	X	X	0	0
X	X	0	X	0
X	0	X	X	0
0	X	X	X	0
1	1	1	1	1

TC4085BP (TOSHIBA)
C-MOS DUAL 2-WIDE 2-INPUT AND-OR-INVERT GATE
— TOP VIEW —

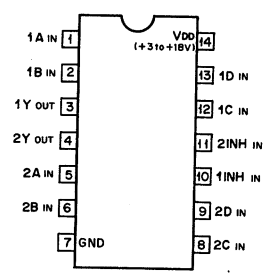

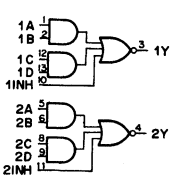

$Y = \overline{A\cdot B + C\cdot D + INH}$

A	B	C	D	INH	Y
0	0	0	0	0	1
0	0	0	1	0	1
0	0	1	0	0	1
0	0	1	1	0	0
0	1	0	0	0	1
0	1	0	1	0	1
0	1	1	0	0	1
0	1	1	1	0	0
1	0	0	0	0	1
1	0	0	1	0	1
1	0	1	0	0	1
1	0	1	1	0	0
1	1	0	0	0	0
1	1	0	1	0	0
1	1	1	0	0	0
1	1	1	1	0	0
X	X	X	X	1	0

0; LOW LEVEL
1; HIGH LEVEL
X; DON'T CARE

TC4093BP (TOSHIBA)

C-MOS 2-INPUT NAND SCHMITT TRIGGER

— TOP VIEW —

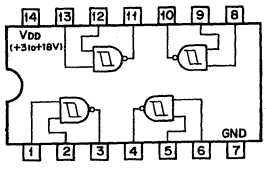

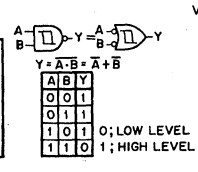

A	B	Y
0	0	1
0	1	1
1	0	1
1	1	0

0 ; LOW LEVEL
1 ; HIGH LEVEL

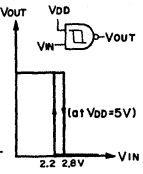

TC4099BP (TOSHIBA)

C-MOS 8-BIT ADDRESSABLE LATCH

— TOP VIEW —

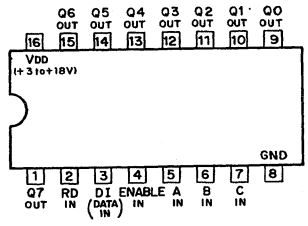

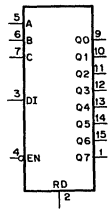

MODE SELECTION

CONTROL INPUT		OUTPUT OF ADDRESSED LATCH	OUTPUT OF EACH OTHER LATCH
EN	RD		
0	0	D	Qno
0	1	D	0
1	0	Qno	Qno
1	1	0	0

Qno : HOLDS PREVIOUS DATA

LATCH SELECTION

CONTROL INPUT			ADDRESSED LATCH
C	B	A	
0	0	0	0
0	0	1	1
0	1	0	2
0	1	1	3
1	0	0	4
1	0	1	5
1	1	0	6
1	1	1	7

TC40H004P (TOSHIBA)

C-MOS INVERTER

— TOP VIEW —

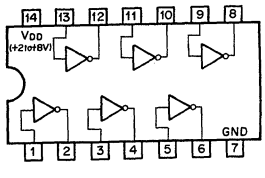

A	Y
0	1
1	0

0 ; LOW LEVEL
1 ; HIGH LEVEL

TC40H074P (TOSHIBA)

C-MOS HIGH SPEED D-TYPE FLIP-FLOP WITH DIRECT SET/RESET

— TOP VIEW —

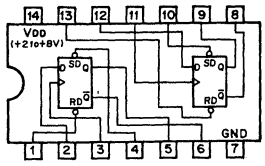

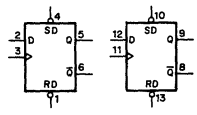

D - MODE

tn	tn + 1	
D	Q	$\overline{Q}$
0	0	1
1	1	0

R-S MODE

INPUT		OUTPUT	
RD	SD	Q	$\overline{Q}$
0	0	1	1
0	1	0	1
1	0	1	0
1	1	D-MODE	

0 ; LOW LEVEL
1 ; HIGH LEVEL

TC40H368P (TOSHIBA)

C-MOS INVERTING 3-STATE BUFFER

— TOP VIEW —

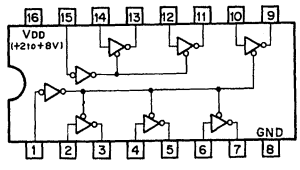

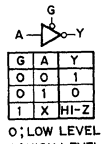

G	A	Y
0	0	1
0	1	0
1	X	HI-Z

0 ; LOW LEVEL
1 ; HIGH LEVEL
X ; DON'T CARE
HI-Z ; HIGH IMPEDANCE

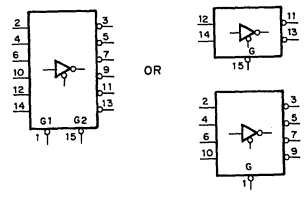

TC4510BP (TOSHIBA)

C-MOS PRESETTABLE BCD UP/DOWN COUNTOR

— TOP VIEW —

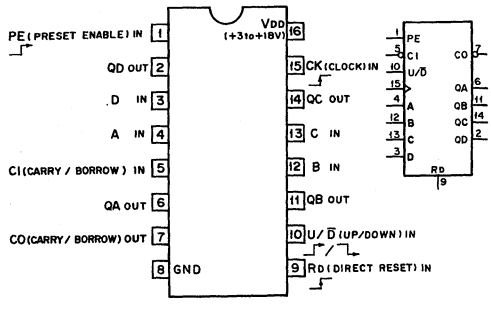

INPUTS					OUTPUTS			
CK	RD	PE	CI	U/$\overline{D}$	QD	QC	QB	QA
X	1	X	X	X	0	0	0	0
X	0	1	X	X	SET TO A,B,C,D			
↓	0	0	0	1	COUNT UP			
↓	0	0	0	0	COUNT DOWN			
0	0	0	X	X	NO CHANGE			
X	0	0	1	X	NO CHANGE			

CO=L
CI=L & (DOWN · COUNT "0" OR UP · COUNT "9")

COUNT	OUTPUTS			
	QD	QC	QB	QA
0	0	0	0	0
1	0	0	0	1
2	0	0	1	0
3	0	0	1	1
4	0	1	0	0
5	0	1	0	1
6	0	1	1	0
7	0	1	1	1
8	1	0	0	0
9	1	0	0	1

COUNT UP
COUNT DOWN

0 ; LOW LEVEL
1 ; HIGH LEVEL
X ; DON'T CARE

TC4512BP (TOSHIBA)
C-MOS 8-CHANNEL DATA SELECTOR/MULTIPLEXER
— TOP VIEW —

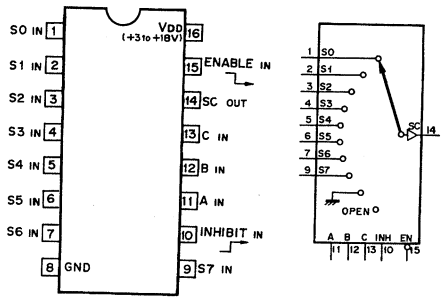

CONTROL INPUTS					OUTPUT
EN	INH	C	B	A	SC
0	0	0	0	0	S0
0	0	0	0	1	S1
0	0	0	1	0	S2
0	0	0	1	1	S3
0	0	1	0	0	S4
0	0	1	0	1	S5
0	0	1	1	0	S6
0	0	1	1	1	S7
0	1	X	X	X	GND
1	X	X	X	X	OPEN

0; LOW LEVEL
1; HIGH LEVEL
X; DON'T CARE

TC4519BP (TOSHIBA)
uPD4519BC (NEC)
C-MOS 4-BIT AND/OR SELECTOR
2-CHANNEL DATA SELECTOR
EXCLUSIVE "NOR" GATE
— TOP VIEW —

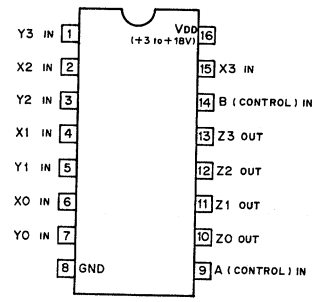

CONTROL		OUTPUT
A	B	Z
0	0	GND
0	1	Y
1	0	X
1	1	Z

0; LOW LEVEL
1; HIGH LEVEL

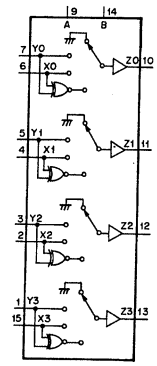

TC4516BP (TOSHIBA)
uPD4516BC (NEC)
C-MOS PRESETTABLE BINARY UP/DOWN COUNTER
— TOP VIEW —

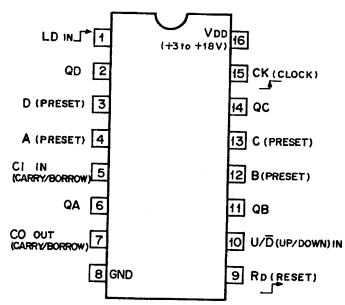

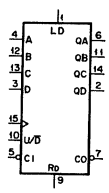

INPUTS					OUTPUTS			
CK	RD	LD	CI	U/D	QD	QC	QB	QA
X	1	X	X	X	0	0	0	0
X	0	1	X	X	SET TO A,B,C,D			
↓	0	0	0	1	COUNT UP			
↓	0	0	0	0	COUNT DOWN			
0	0	0	X	X	NO CHANGE			
X	0	0	1	X	NO CHANGE			

CO = L
CI = L & (DOWN · COUNT "0" OR UP · COUNT "15")

COUNT	OUTPUTS			
	QD	QC	QB	QA
0	0	0	0	0
1	0	0	0	1
2	0	0	1	0
3	0	0	1	1
4	0	1	0	0
5	0	1	0	1
6	0	1	1	0
7	0	1	1	1
8	1	0	0	0
9	1	0	0	1
10	1	0	1	0
11	1	0	1	1
12	1	1	0	0
13	1	1	0	1
14	1	1	1	0
15	1	1	1	1

COUNT UP
COUNT DOWN

TC4528BF
TC4528BP (TOSHIBA)
uPD4528BC (NEC)
C-MOS RETRIGGERABLE/RESETTABLE MMV
— TOP VIEW —

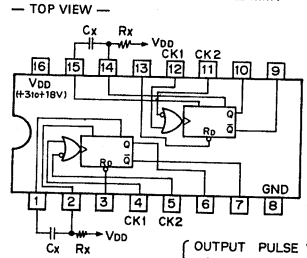

INPUTS			OUTPUTS	
CK1	CK2	RD	Q	Q̄
↓	1	1	⊓	⊔
↓	0	1	Q	Q̄
1	↑	1	Q	Q̄
0	↑	1	⊓	⊔
X	X	0	0	1

0; LOW LEVEL
1; HIGH LEVEL
X; DON'T CARE

OUTPUT PULSE WIDTH Q OR Q̄
• (FOR Cx ≧ 0.01μF USE FORMULA)
PW = 0.2 · Rx · Cx · ℓn (VDD − GND)
• (FOR Cx < 0.01μF USE DATA BOOK.)

HD14538BP (HITACHI)
MC14538BCP (MOTOROLA)
TC4538BF (TOSHIBA) FLAT PACKAGE
C-MOS DUAL RETRIGGERABLE/NON-RETRIGGERABLE MONOSTABLE MULTIVIBRATOR
— TOP VIEW —

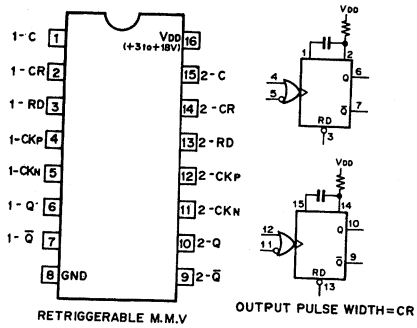

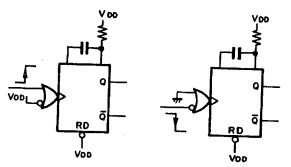

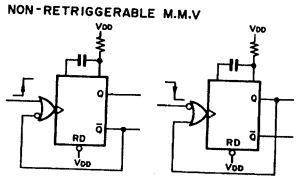

TC4539BP (TOSHIBA)
μPD4539BC (NEC)
C-MOS DUAL 4-CHANNEL DATA SELECTOR/MULTIPLEXER
— TOP VIEW —

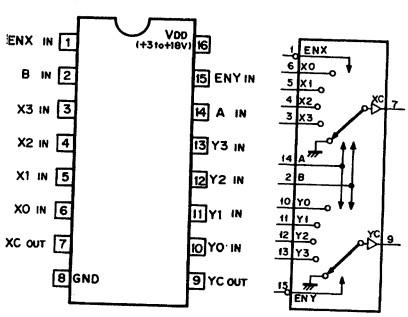

CONT IN			ON CHANNEL
EN	B	A	
0	0	0	0
0	0	1	1
0	1	0	2
0	1	1	3
1	X	X	GND

0 ; LOW LEVEL
1 ; HIGH LEVEL
X ; DON'T CARE

TC5067BP (TOSHIBA)
C-MOS HIGH VOLTAGE BUFFER/INVERTING TYPE
— TOP VIEW —

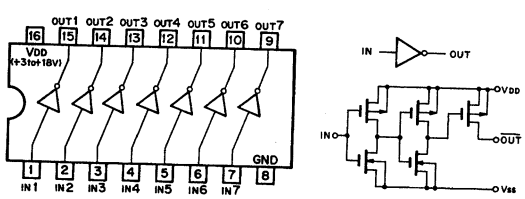

TL082CP (TI)
OPERATIONAL AMPLIFIER
(J FET-INPUT)
— TOP VIEW —

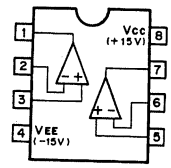

TL8608P (TOSHIBA)
N-CH CCD ANALOG PROCESSING UNIT
— TOP VIEW —

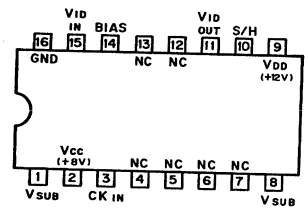

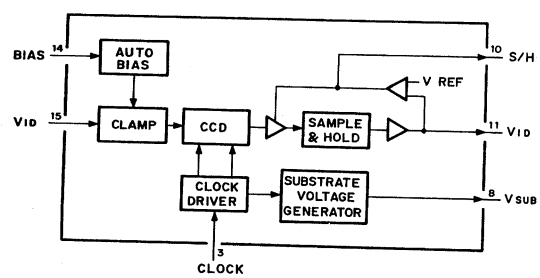

uA733HC (FSC)
DIFFERENTIAL VIDEO AMPLIFIER
— BOTTOM VIEW —

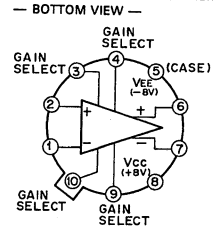

uA796HC (FSC)
DOUBLE-BALANCED MOD/DEMOD.
— BOTTOM VIEW —

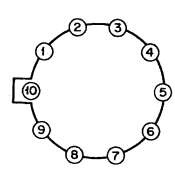

1 +SIGNAL INPUT
2 GAIN ADJUST
3 GAIN ADJUST
4 −SIGNAL INPUT
5 BIAS
6 +OUTPUT
7 +CARRIER INPUT
8 −CARRIER INPUT
9 −OUTPUT
10 VEE

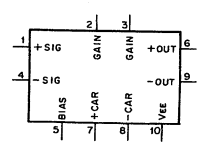

uPA54H (NEC)
DIODE ARRAY
— SIDE VIEW —

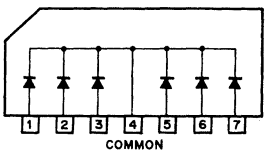

uPA64H (NEC)
DIODE ARRAY
— SIDE VIEW —

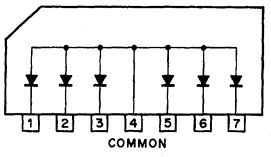

uA79 ? ?UC (FSC)
uPC79 ? ?H (NEC)
NEGATIVE VOLTAGE REGULATOR (1A)

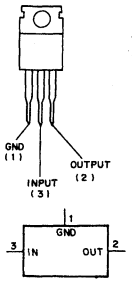

– 5V μPC7905H
–12V μA7912UC

uPC78L? ? (NEC)
POSITIVE VOLTAGE REGULATOR (100mA)

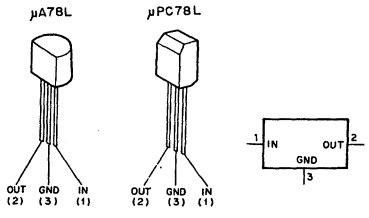

5V μPC78L05(A)
8V μPC78L08

uPC311C (NEC)
VOLTAGE COMPARATOR
— TOP VIEW —

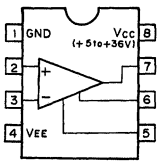

uPC78??H (NEC)
POSITIVE VOLTAGE REGULATOR (1A)

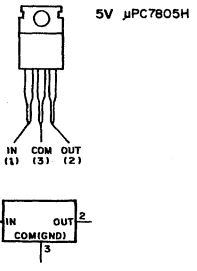

uPC324C (NEC)
QUAD. OP AMPLIFIER
— TOP VIEW —

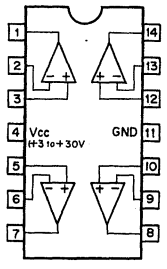

uPC339C (NEC)
COMPARATOR
— TOP VIEW —

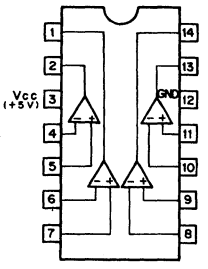

HA17458GS (HITACHI)
uPC1458C (NEC)
OPERATIONAL AMPLIFIER
— TOP VIEW —

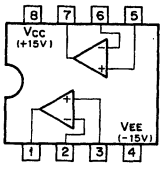

2SA1026
2SA1027R
2SA678

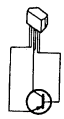

2SA1115

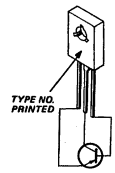

2SA1141

TOP VIEW (SCALE 4/1)

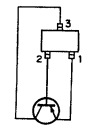

2SA1162
2SA1226

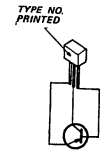

2SA1175

2SA684
2SA773
2SB739
2SB740

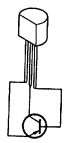

2SA733
2SA844

BOTTOM VIEW

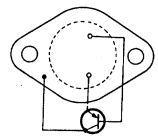

2SA747
2SA747A

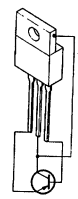

2SA771
2SB834
2SB856

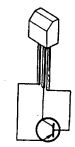

2SB733
2SB734

BOTTOM VIEW

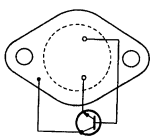

2SC1116

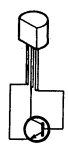

2SC1364
2SC1634
2SC1740
2SC2878
2SC641K
2SC945

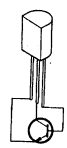

2SC1474
2SC1475
2SD788
2SD789

2SC1636
2SC403C

TOP VIEW

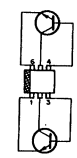

2SC1963

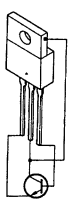

2SC1983
2SC2315

2SC2021
2SD1055

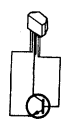

2SC2458
2SC2603
2SC403SP
2SC634SP

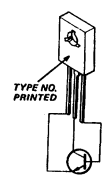

2SC2690A

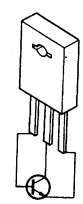

2SC2681

TOP VIEW (SCALE 4/1)

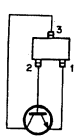

2SC2712
2SC2757
2SC3052

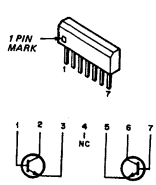

2SC2771

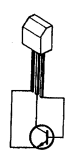

2SD773
2SD774

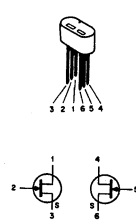

2SK240

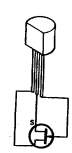

2SK523

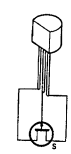

J175

(SCALE2/1)

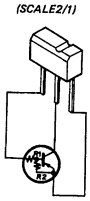

DTA144EF (R1=47K, R2=47K)

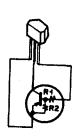

DTA144ES (R1=47K, R2=47K)

(SCALE 2/1)

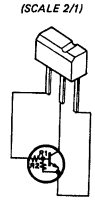

DTC144EF (R1=47K, R2=47K)

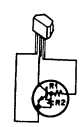

DTC144ES (R1=47K, R2=47K)

PS4005

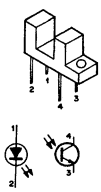

SPS102

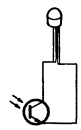

TOP VIEW

TX429D-2
TX429M

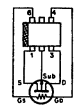

uPA74V

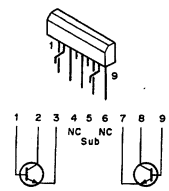

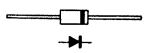

10E-1
10E-2
1S1555
1S1555S
1S2076
1S2473
1SS119
1SS133
1SS148
1SS53
1SS99
SIB01-02

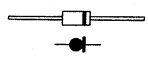

10YD ? ?

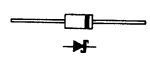

1S1925P
1SS97

TOP VIEW (SCALE 4/1)

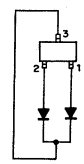

1S2837
DAN202

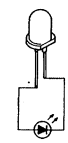

EBR5104S-10 ; RED
GL-5HD5 ; RED

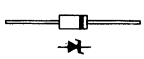

EQA01- ? ? ?
RD ? ?EB

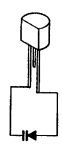

FC54M

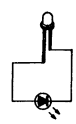

HLMP-1302 ; RED
TLY123 ; YELLOW

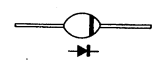

U05E
U05G
V06C

TOP VIEW

TLR-321 ; RED

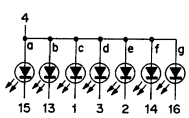

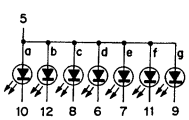

TOP VIEW (SCALE 4/1)

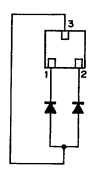

DAP202

The circuit diagram of each IC is obtained from the IC data book published by the manufacturer.

SECTION 17
SCHEMATIC DIAGRAMS

CIRCUIT FUNCTION OF THE PRINTED CIRCUIT BOARD

The circuit information is provided below.

SYSTEM	CIRCUIT BOARD	CIRCUIT FUNCTION
VIDEO	MD-25	. Y/C Modulator
	YC-19	. Y/C SEP/PHASE Equalize
	BC-7	. Control timing gen.
	BC-8	. Control timing gen.
	RP-18	. RF REC/PB Amplifier
	YD-17	. Y Demodulator
	FL-36	. HPF
	AUD-1	. Audio FM Detector
	CD-29	. Chroma Demodulator/Enhancer
	NR-8	. Noise reduction
AUDIO	CP-93	. Audio input level select
	CP-92	. Audio input amplifier
	AU-62	. Audio PB/REC Amplifier
	DUS-71(A),(B)	. VAR,Inductor
	AU-63	. Audio head amp/bias/erase OSC.
	FL-31	. Noise Filter
	AO-3	. Audio output amplifier
	AO-2	. Monitor select
	HP-5	. Headphones jack/level control
SERVO	SV-52A	. Drum/Capstan PWM Servo
	CF-9	. CTL REC/PB AMP/Color framing
	RS-3	. Reel servo
	RS-4	. Tape tension servo
	PD-14	. Regulator
	DR-9(1),(2)	. Reel motor driver
	PD-15(1),(2)	. REG +12V/+5V
	PD-17	. UNREG
	PD-21	. REG -12V
	DR-8	. Capstan motor driver
POWER	PW-50	. AC Rectifier
	PW-79	. Switching regulator
	FU-16	. Fuse
KEY	KY-9	. Function key
	KY-14	. TRIM/ENTRY sw
	DP-9	. Display
	PC-9	. Dial detector
	PC-14	. JOG Detector
TIME CODE	TC-13	. Time code REC/PB amplifier CTL Counter Servo ref sync selector
SYSTEM CONTROL	SY-36	. Function system control
	SY-37A	. Micro processor
	SY-71	. Motor/solenoid driver
	EK-2(B)	. Thread end detector
	TM-8	. Thread motor
	LP-33	. Audio REC/PB Level control
	PR-33	. Remote select
	MS-5(E)	. Remote/local sw
	LMP-1	. Warning lamp
	CC-9	. Cassette in/down detector
	CC-10	. Cassette in/down detector
	CC-11	. Cassette in/down detector
	RM-4	. Remote connector
	RM-35	. Remote connector/DC Fan
	TM-14	. Terminal
	RE-3	. T/S-REEL Motor
	PC-12	. Tape begin/end detector
	PC-8	. Tape begin/end detector
MOTHER BOARD and OTHERS	MB-9	. Mother board
	EK-3	. Thread end detector
	EK-2(A)	. Unthread end detector
	PC-7(B)	. Miss rec detector
	MB-18-1	. Mother board
	PC-7(A)	. KCA/KCS Detector
	PH-1(A),(B)	. S/T-Reel
	LE-4(A),(B)	. Tension detector
	EM-1	. S/T-REEL DME
	TM-4	. CTL R/P, TC R/P Head
	TC-12	. CTL R/P, TC R/P Head
	MS-5(A),(B),(C),(D)	. System sw
	LV-1	. Video level VR

MD-25(1/2), YC-19(1/2) MD-2

MD-25(1/2); Y MODULATOR
YC-19 (1/2); Y PHASE EQUALIZE

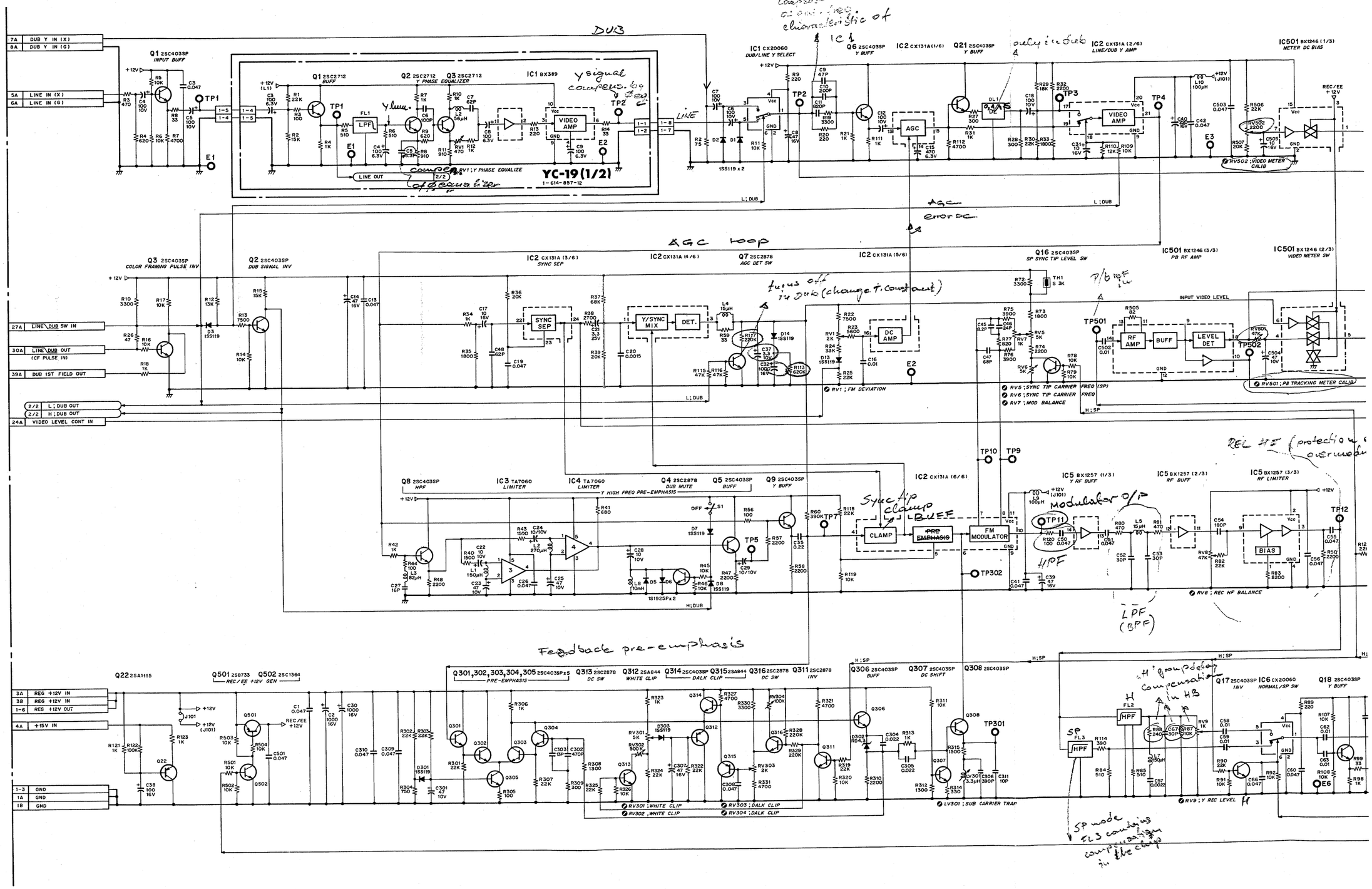

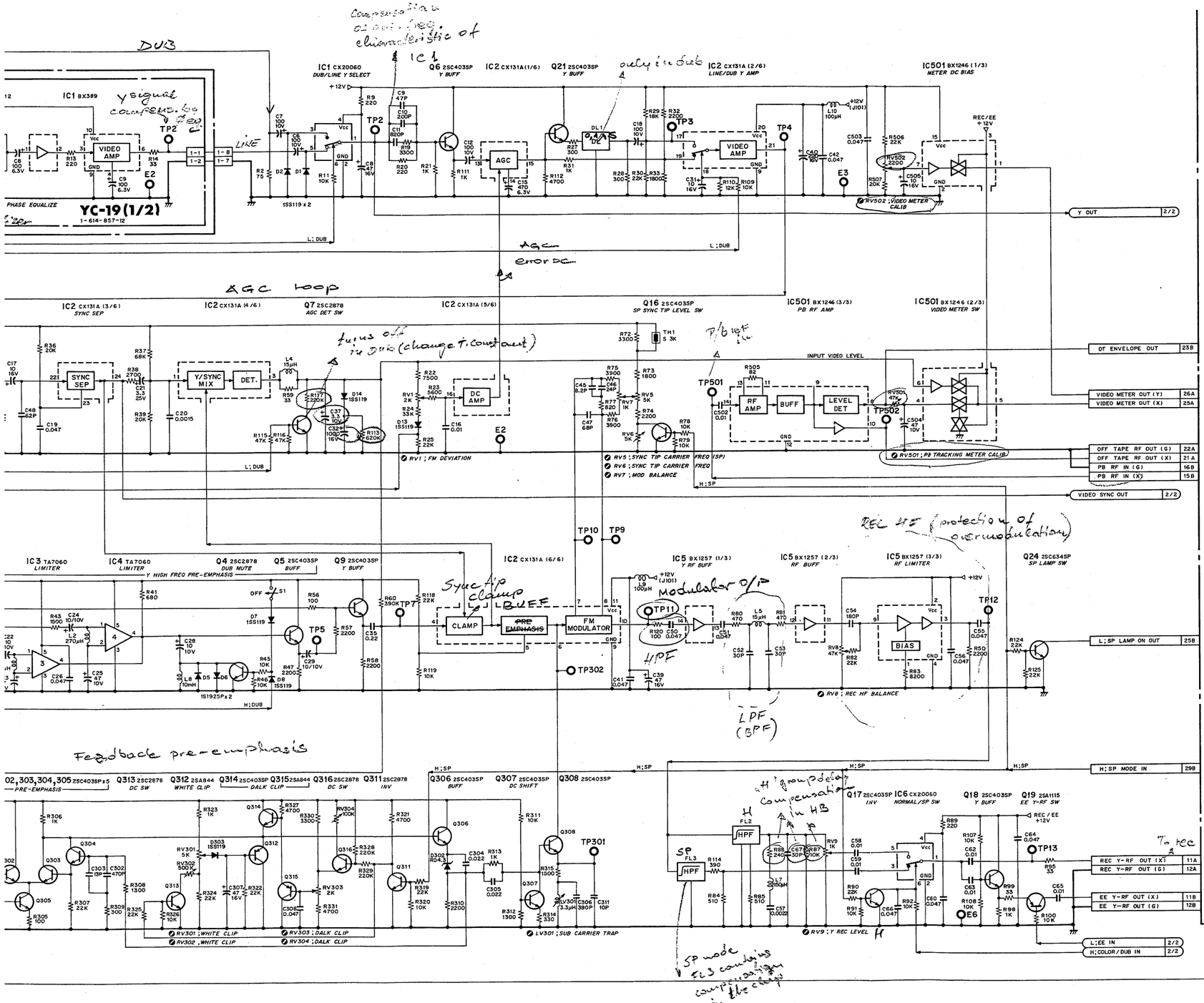
YC-19(1/2)
1-614-857-12
IC1 BX389
IC1 CX20060 DUB/LINE Y SELECT
Q6 2SC4035P Y BUFF
IC2 CX131A(1/6)
Q21 2SC4035P Y BUFF
IC2 CX131A(2/6) LINE/DUB Y AMP
IC501 BX1246(1/3) METER DC BIAS
VIDEO AMP
AGC
DC
PHASE EQUALIZE
1SS119 x2
RV502 ; VIDEO METER CALIB
Y OUT 2/2
L ; DUB
AGC loop
IC2 CX131A(3/6) SYNC SEP
IC2 CX131A(4/6)
Q7 2SC2878 AGC DET SW
IC2 CX131A(5/6)
Q16 2SC4035P SP SYNC TIP LEVEL SW
IC501 BX1246(3/3) PB RF AMP
IC501 BX1246(2/3) VIDEO METER SW
SYNC SEP
Y/SYNC MIX
DET.
DC AMP
RF AMP
BUFF
LEVEL DET
INPUT VIDEO LEVEL
DT ENVELOPE OUT 23B
VIDEO METER OUT (Y) 26A
VIDEO METER OUT (X) 25A
OFF TAPE RF OUT (G) 22A
OFF TAPE RF OUT (X) 21A
PB RF IN (G) 16B
PB RF IN (X) 15B
VIDEO SYNC OUT 2/2
RV1 ; FM DEVIATION
RV5 ; SYNC TIP CARRIER FREQ (SP)
RV6 ; SYNC TIP CARRIER FREQ
RV7 ; MOD BALANCE
RV501 ; PB TRACKING METER CALIB
H ; SP
IC3 TA7060 LIMITER
IC4 TA7060 LIMITER
Q4 2SC2878 DUB MUTE
Q5 2SC4035P BUFF
Q9 2SC4035P Y BUFF
Y HIGH FREQ PRE-EMPHASIS
IC2 CX131A(6/6)
IC5 BX1257(1/3) Y RF BUFF
IC5 BX1257(2/3) RF BUFF
IC5 BX1257(3/3) RF LIMITER
Q24 2SC6345P SP LAMP SW
CLAMP
PRE EMPHASIS
FM MODULATOR
BIAS
L ; SP LAMP ON OUT 25B
RV8 ; REC HF BALANCE
H ; DUB
02,303,304,305 2SC4035P±5 PRE-EMPHASIS
Q313 2SC2878 DC SW
Q312 2SA844 WHITE CLIP
Q314 2SC4035P Q315 2SA844 DALK CLIP
Q316 2SC2878 DC SW
Q311 2SC2878 INV
Q306 2SC4035P BUFF
Q307 2SC4035P DC SHIFT
Q308 2SC4035P
Q17 2SC4035P INV
IC6 CX20060 NORMAL/SP SW
Q18 2SC4035P Y BUFF
Q19 2SA1115 EE Y-RF SW
REC/EE +12V
REC Y-RF OUT (X) 11A
REC Y-RF OUT (G) 12A
EE Y-RF OUT (X) 11B
EE Y-RF OUT (G) 12B
L ; EE IN 2/2
H ; COLOR/DUB IN 2/2
H ; SP MODE IN 29B
RV301 ; WHITE CLIP
RV302 ; WHITE CLIP
RV303 ; DALK CLIP
RV304 ; DALK CLIP
LV301 ; SUB CARRIER TRAP
RV9 ; Y REC LEVEL
39B CONFI SW PULSE OUT
40B RF SW PULSE IN
30B H ; TC REC/PB IN
31B H ; RE EN IN
32A H ; RE CH-B MUTE OUT
33A H ; RE CH-A MUTE OUT
26B H ; CONFI IN
37A H ; VIDEO EE OUT
36B H ; VIDEO REC/EE IN
33B H ; VIDEO REC IN
32B SPEED PG(A) IN
34B PHASE PG IN
36A L ; REC EN OUT
35A L ; CH-A PB AMP EN OUT
34A L ; CH-B PB AMP EN OUT
CONFI SW PULSE IN 501-1
RF SW PULSE OUT 501-2
GND 501-3
H ; TC REC/PB OUT 501-4
+12V 501-5
GND 501-6
H ; RE EN OUT 501-7
H ; RE CH-B MUTE IN 501-8
H ; RE CH-A MUTE IN 501-9
GND 501-10
GND 503-11
H ; CONFI OUT 503-12
F IN 503-13
GND 503-14
H ; VIDEO EE IN 503-15
H ; VIDEO EE IN 503-16
D IN 503-17
GND 503-18
H ; VIDEO REC/EE OUT 503-19
E IN 503-20
H ; VIDEO REC OUT 504-21
GND 504-22
H ; VIDEO REC/EE IN 504-23
SW PULSE IN 504-24
SPEED PG(A) OUT 504-25
SYNC OUT 504-26
PHASE PG OUT 504-27
L ; REC AMP EN IN 504-28
G IN 504-29
SYNC IN 504-30
GND 502-1
SYNC OUT 502-2
+12V OUT 502-3
D OUT 502-4
SW PULSE OUT 502-5
G OUT 502-6
E OUT 502-7
F OUT 502-8
L ; CH-A PB AMP EN IN 502-9
L ; CH-B PB AMP EN IN 502-10
SYNC IN 2/2
H ; VIDEO EE OUT 2/2
CN501 / MD-25 — CN501 / BC-7
CN502 / MD-25 — CN502 / BC-8
CN503 / MD-25 — CN503 / BC-7
CN504 / MD-25 — CN504 / BC-7
MD-25(1/2)
1-614-858-12,13
BVU-850P

MD-25(2/2); CHROMA MODULATOR

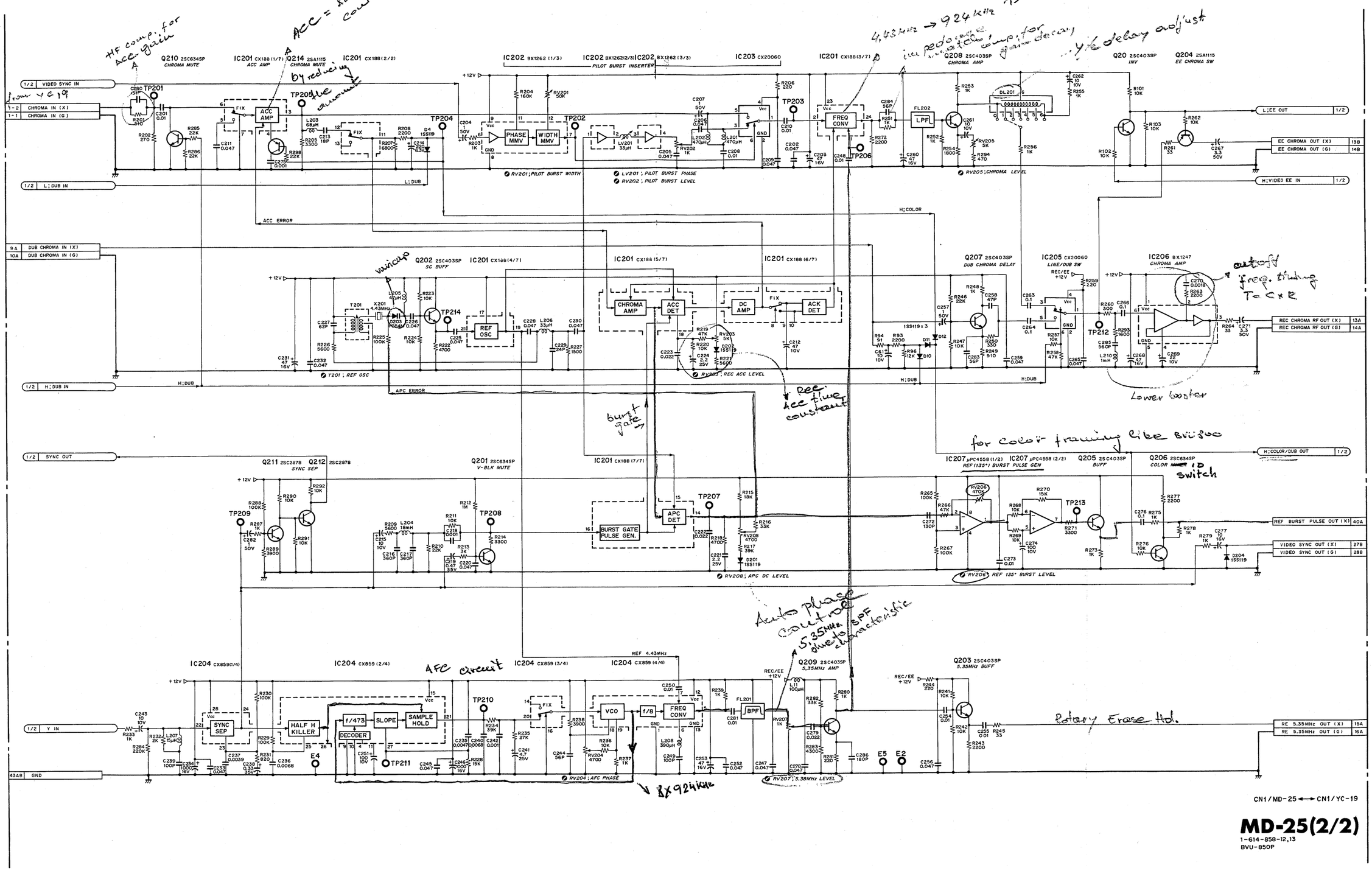

MD-25(2/2)
1-614-858-12,13
BVU-850P

YC-19(2/2), BC-7, BC-8 YC-19(

YC-19(2/2); CHROMA SEPARATOR
BC-7; CONTROL TIMING GEN.
BC-8; CONTROL TIMING GEN.

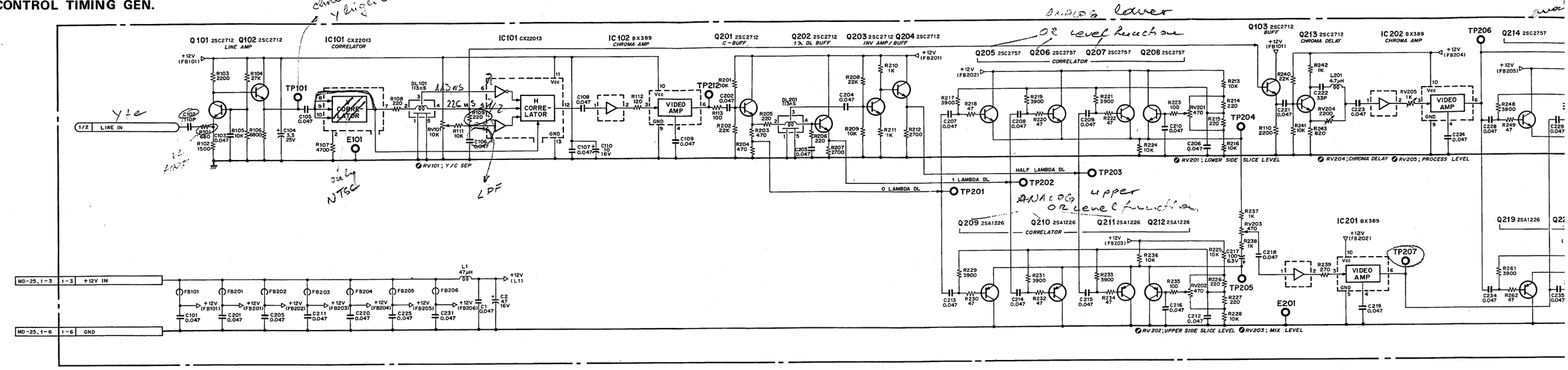

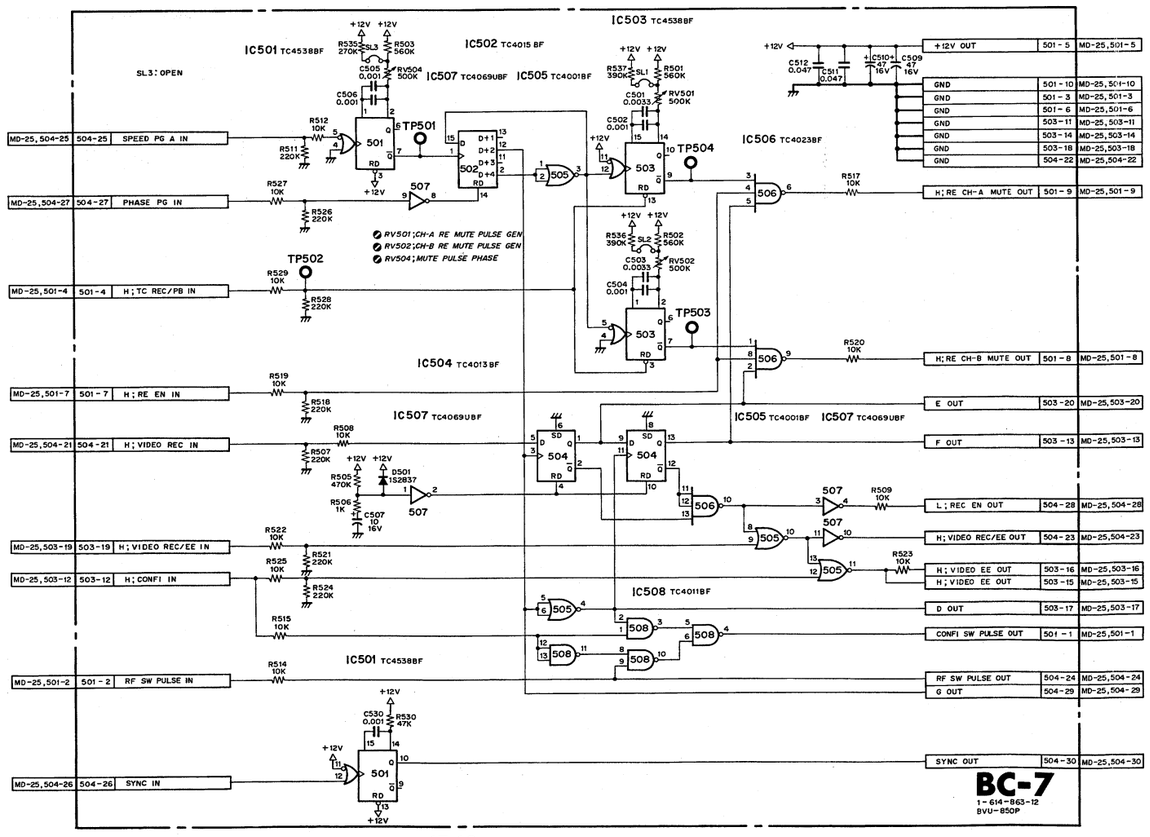

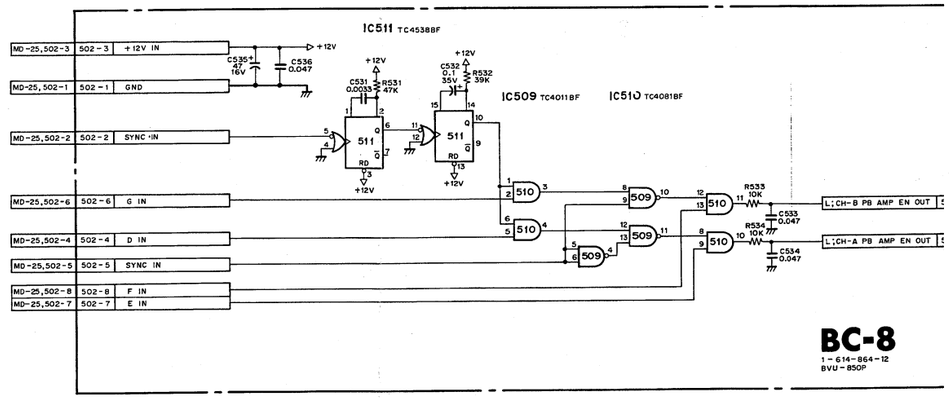

BC-7

REF NO.	TYPE	PIN +12V	PIN GND
IC501	TC4538BF	16	8
502	TC4015BF	16	8
503	TC4538BF	16	8
504	TC4013BF	14	7
505	TC4001BF	14	7
506	TC4023BF	14	7
507	TC4069UBF	14	7
508	TC4011BF	14	7

BC-8

REF NO.	TYPE	PIN +12V	PIN GND
IC509	TC4011BF	14	7
510	TC4081BF	14	7
511	TC4538BF	16	8

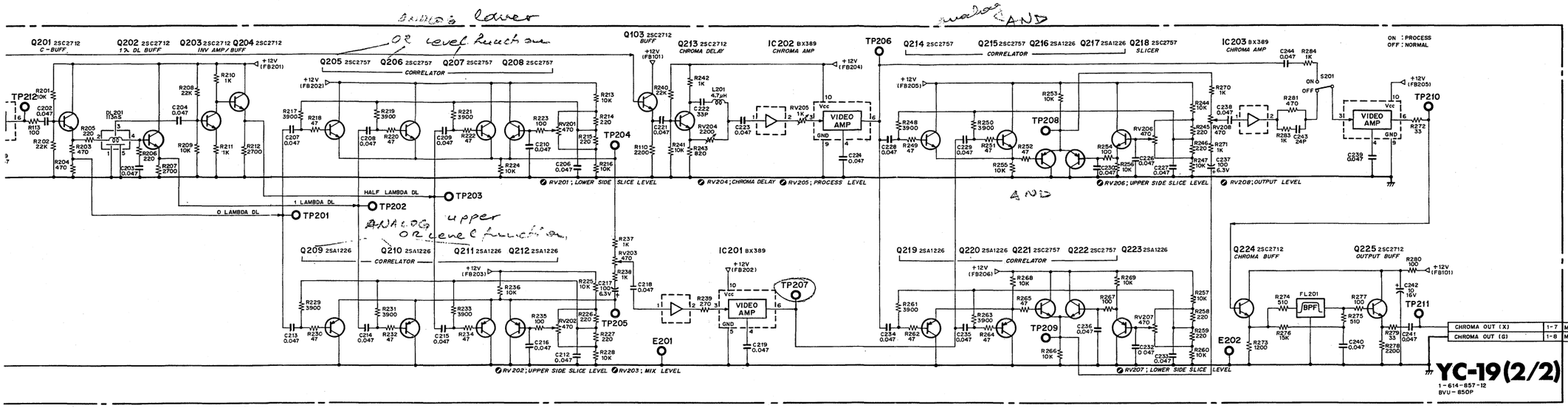

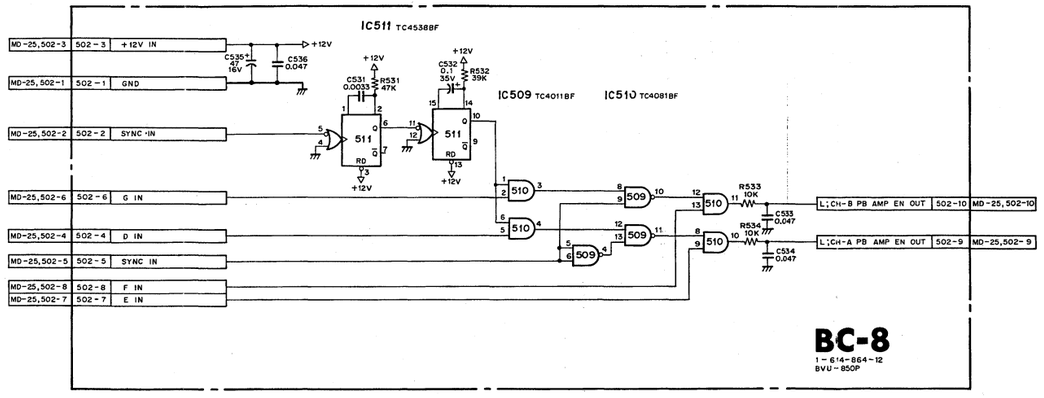

BC-7

REF NO.	TYPE	PIN +12V	PIN GND
IC501	TC4538BF	16	8
502	TC4015BF	16	8
503	TC4538BF	16	8
504	TC4013BF	14	7
505	TC4001BF	14	7
506	TC4023BF	14	7
507	TC4069UBF	14	7
508	TC4011BF	14	7

BC-8

REF NO.	TYPE	PIN +12V	PIN GND
IC509	TC4011BF	14	7
510	TC4081BF	14	7
511	TC4538BF	16	8

RP-18; RF REC/PB AMPLIFIER

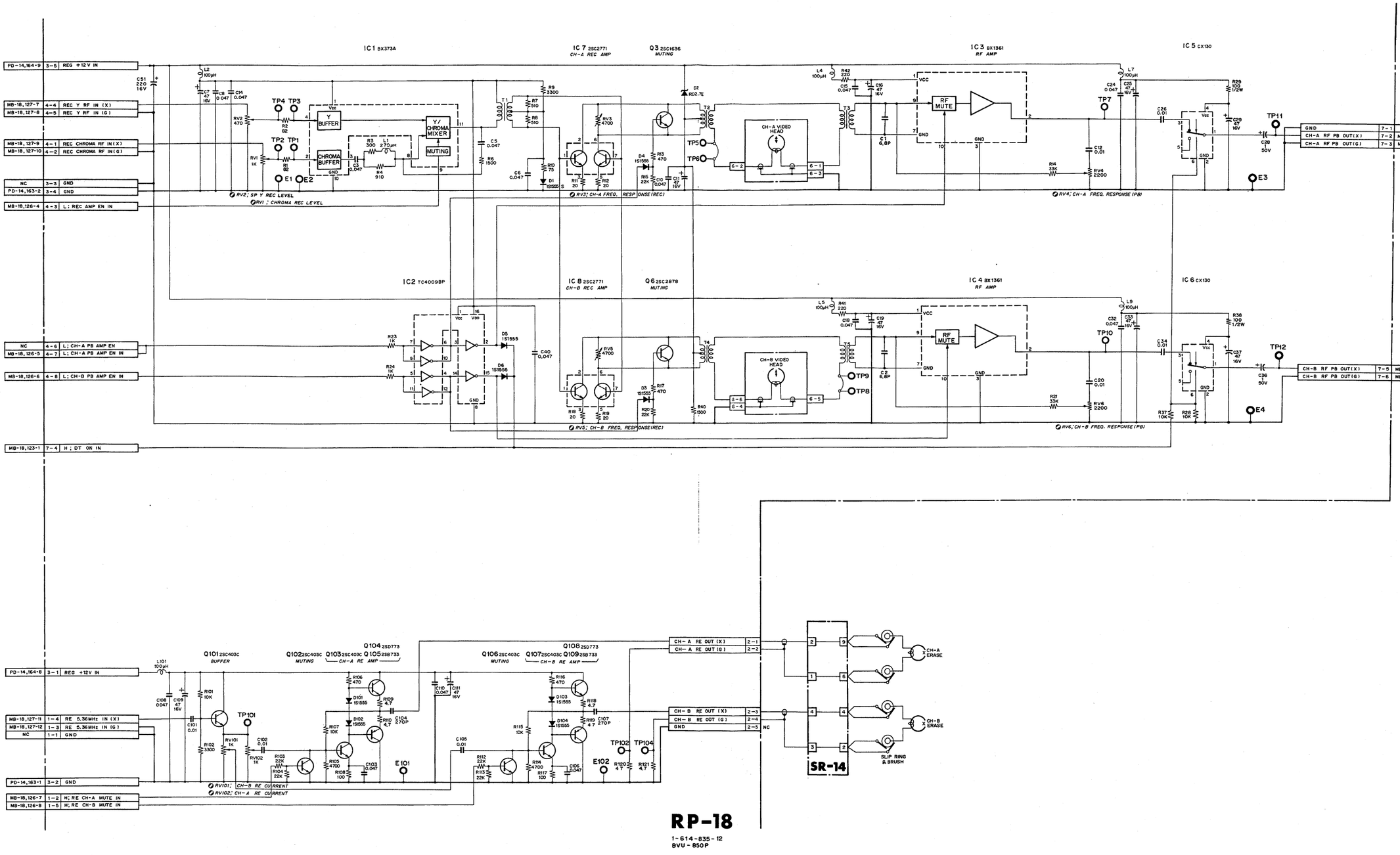

YD-17; Y DEMODULATOR

S/N; UP TO 10390

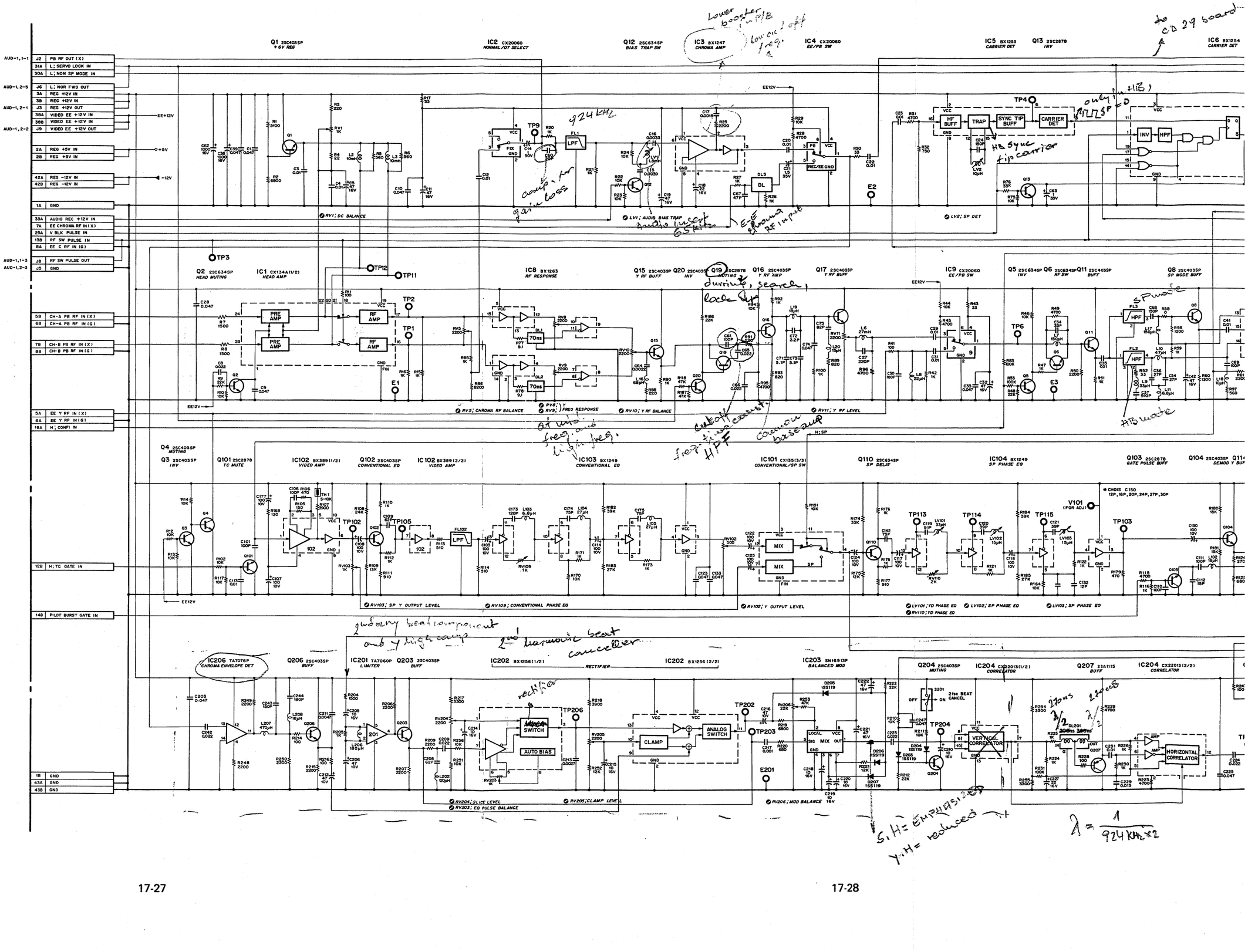

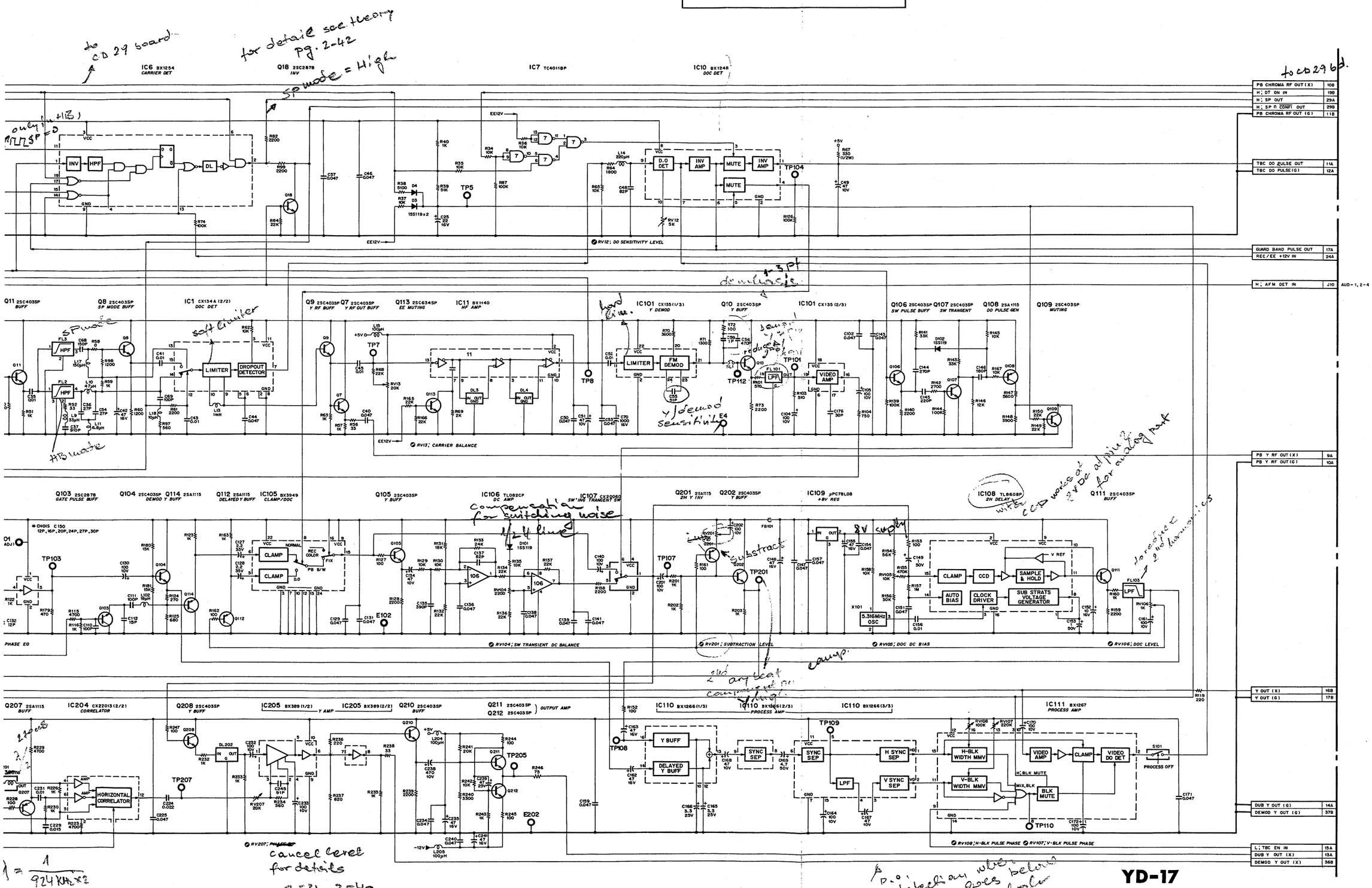

YD-17

1-614-832-12

BVU-850P

YD-17; Y DEMODULATOR

S/N; 10391 and higher

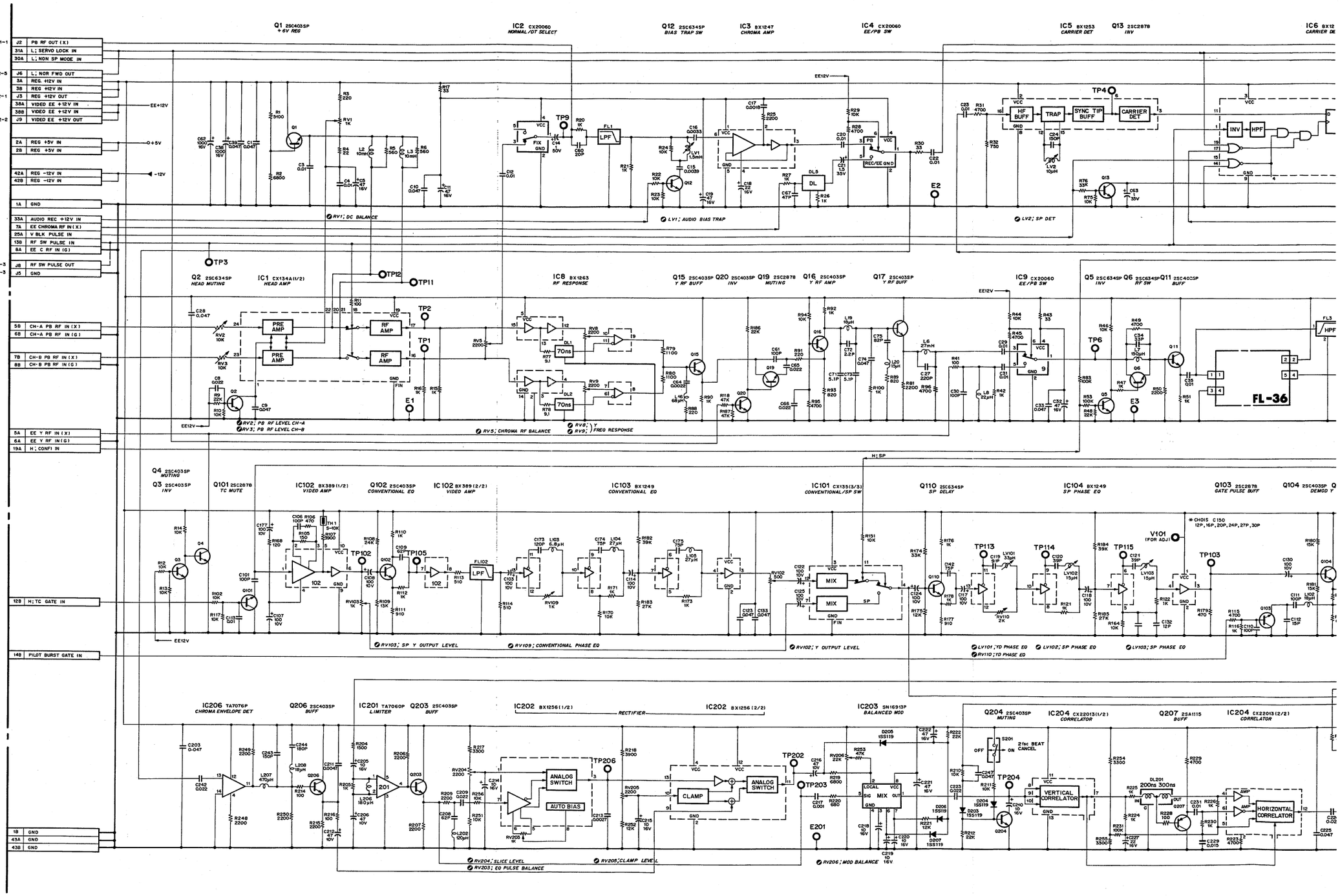

17-27(a)

17-28(a)

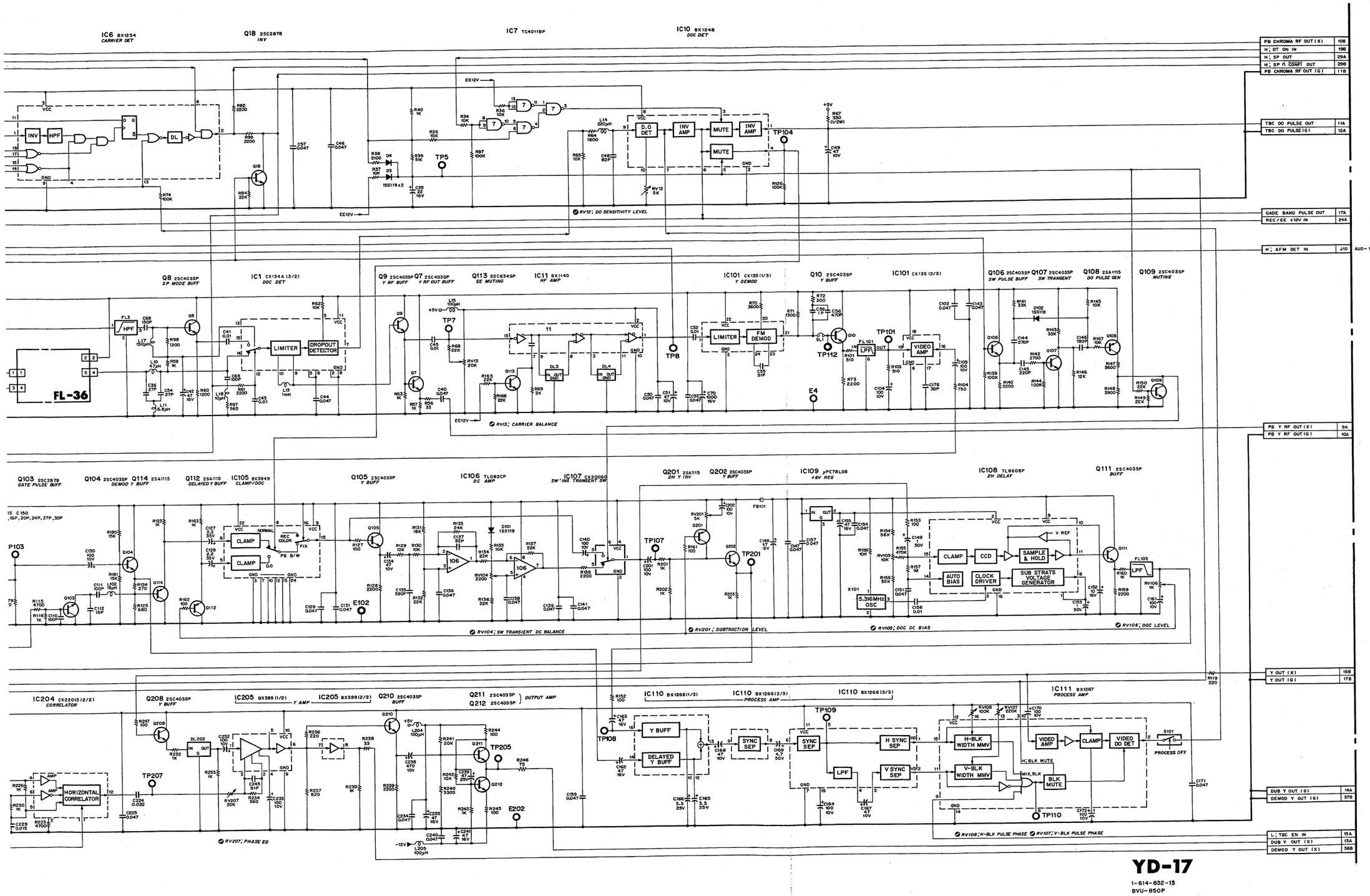

YD-17

1-614-632-13

BVU-850P

AUD-1; AUDIO FM DETECTOR
FL-36;

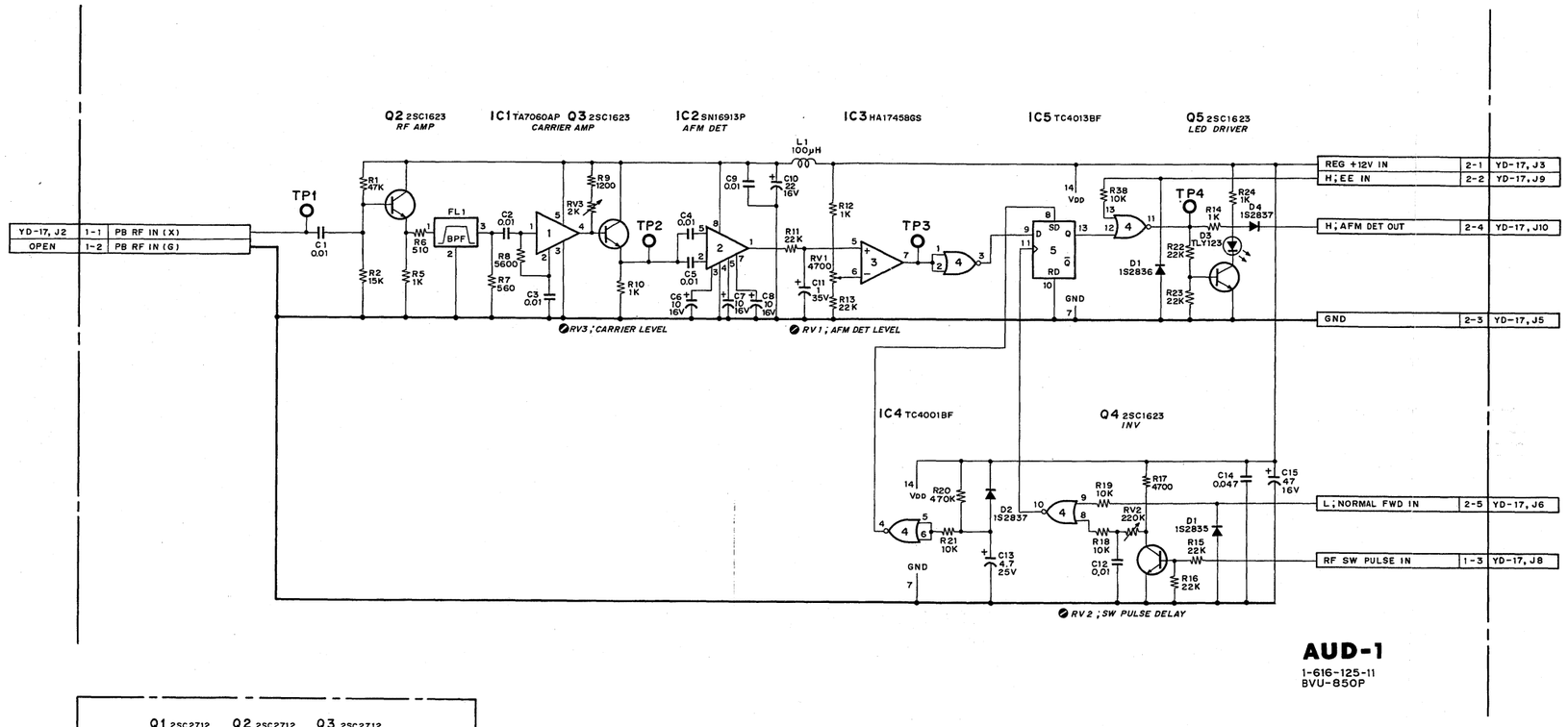

AUD-1
1-616-125-11
BVU-850P

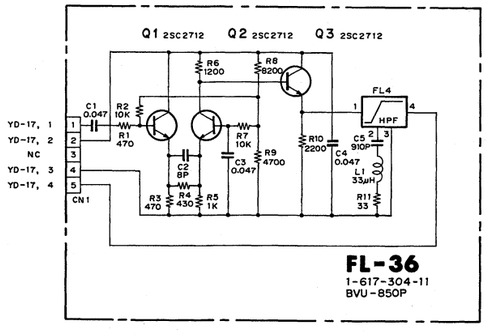

FL-36
1-617-304-11
BVU-850P

CD-29(1/2) CD-

CD-29(1/2); CHROMA DEMODULATOR

NOTE		
MARK	CHANGE INFORMATION	SERIAL NO.
*	RV29 10K ⟶ 4700	10391 and higher
	C4 36P ⟶ 51P	
	L14 270μH ⟶ 180μH	
	R2 390 ⟶ 180	

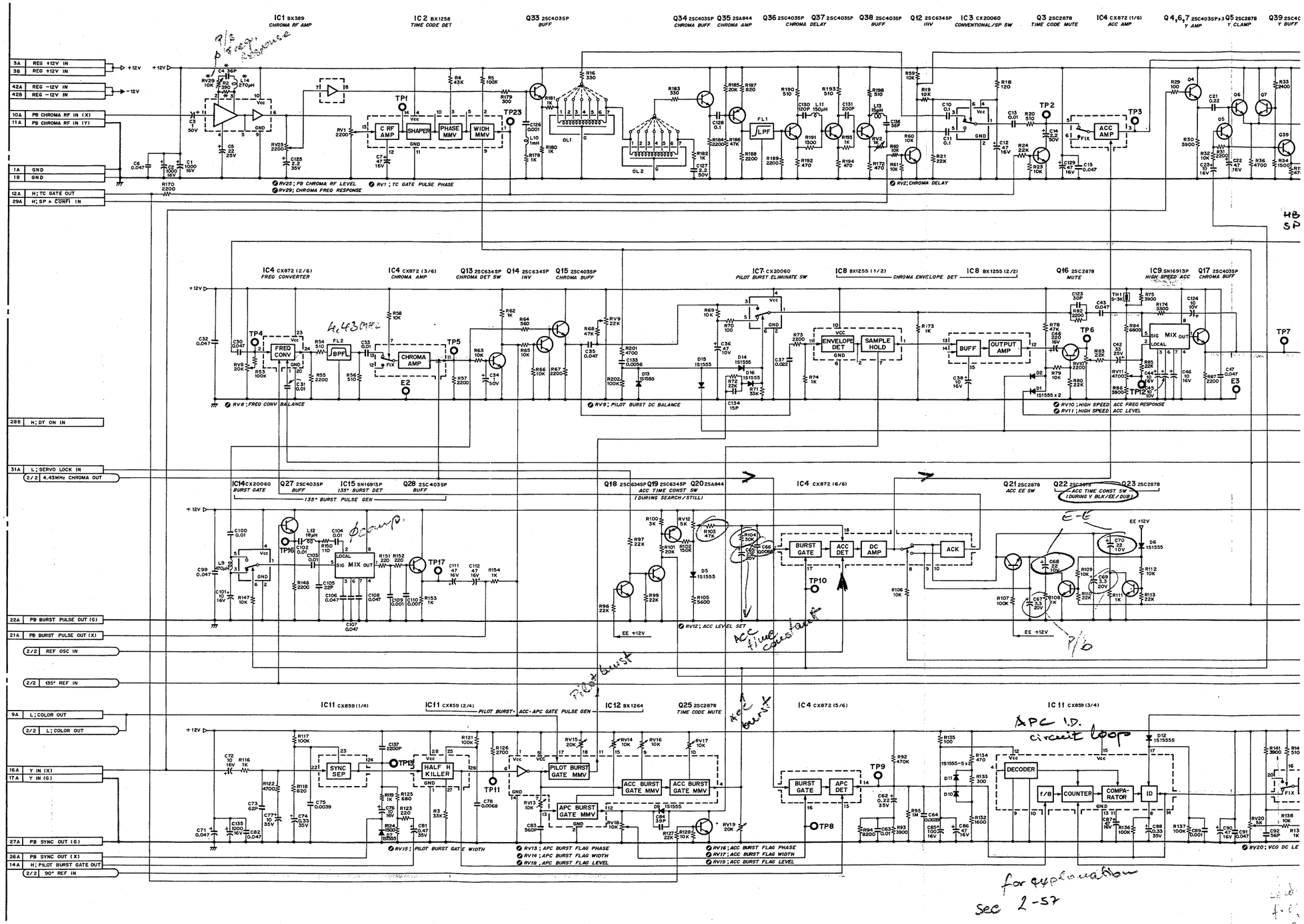

CD-29(1/2) CD-29(1/2)

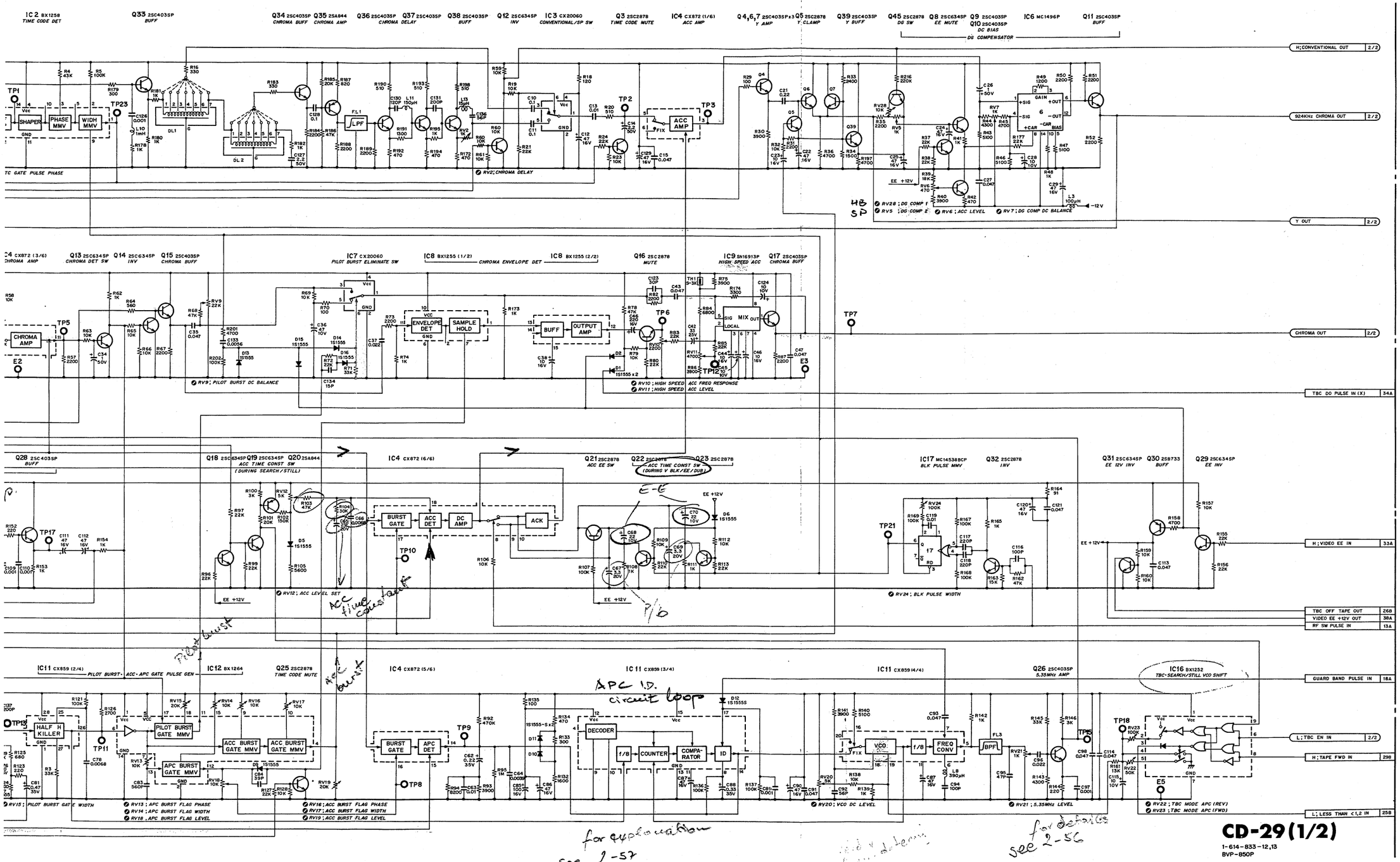

CD-29(1/2)

1-614-833-12,13

BVP-850P

CD-29(2/2); CHROMA DEMODULATOR/ENHANCER
NR-8; NOISE REDUCTION

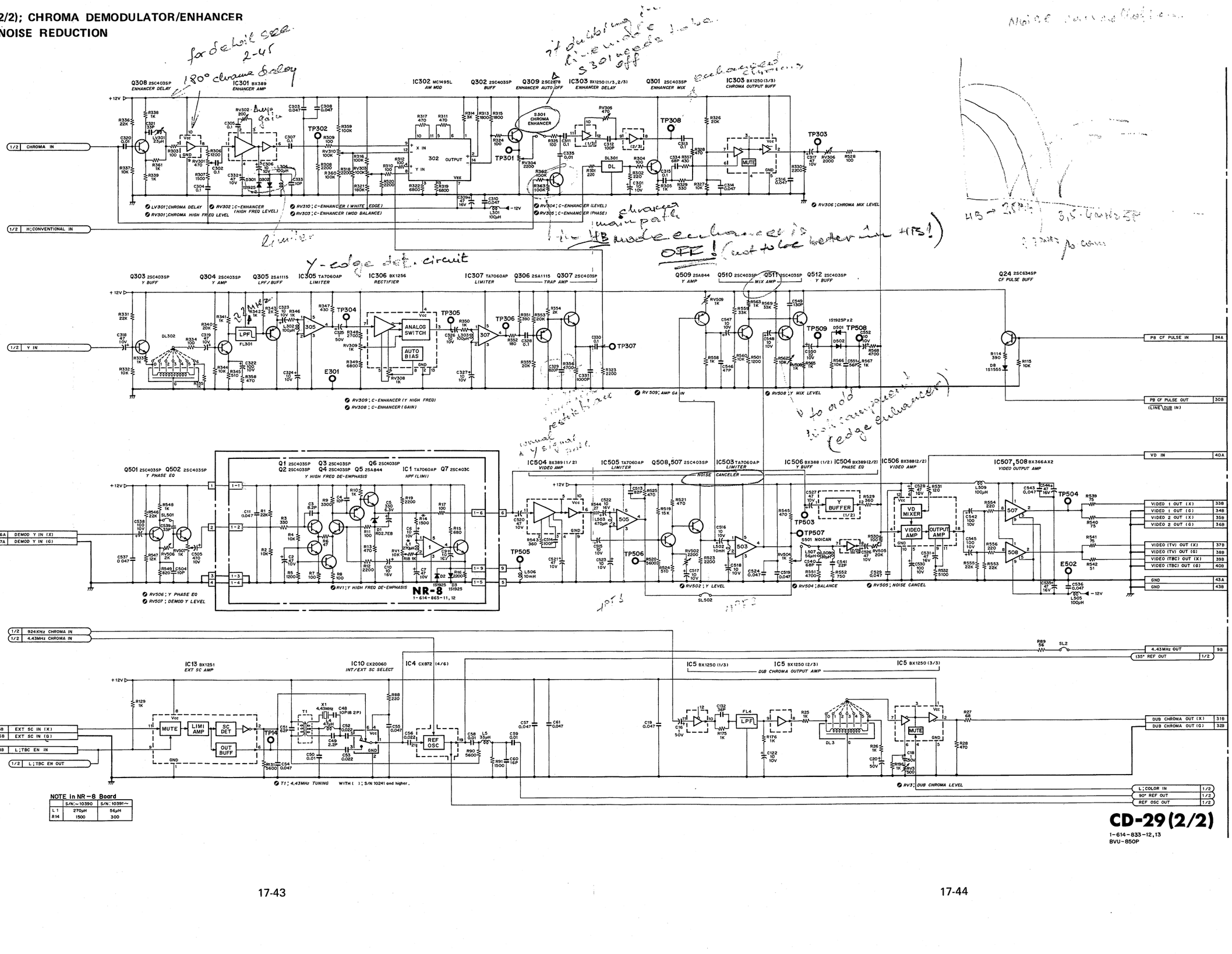

CP-93; AUDIO INPUT LEVEL SELECT
CP-92; AUDIO INPUT AMPLIFIER

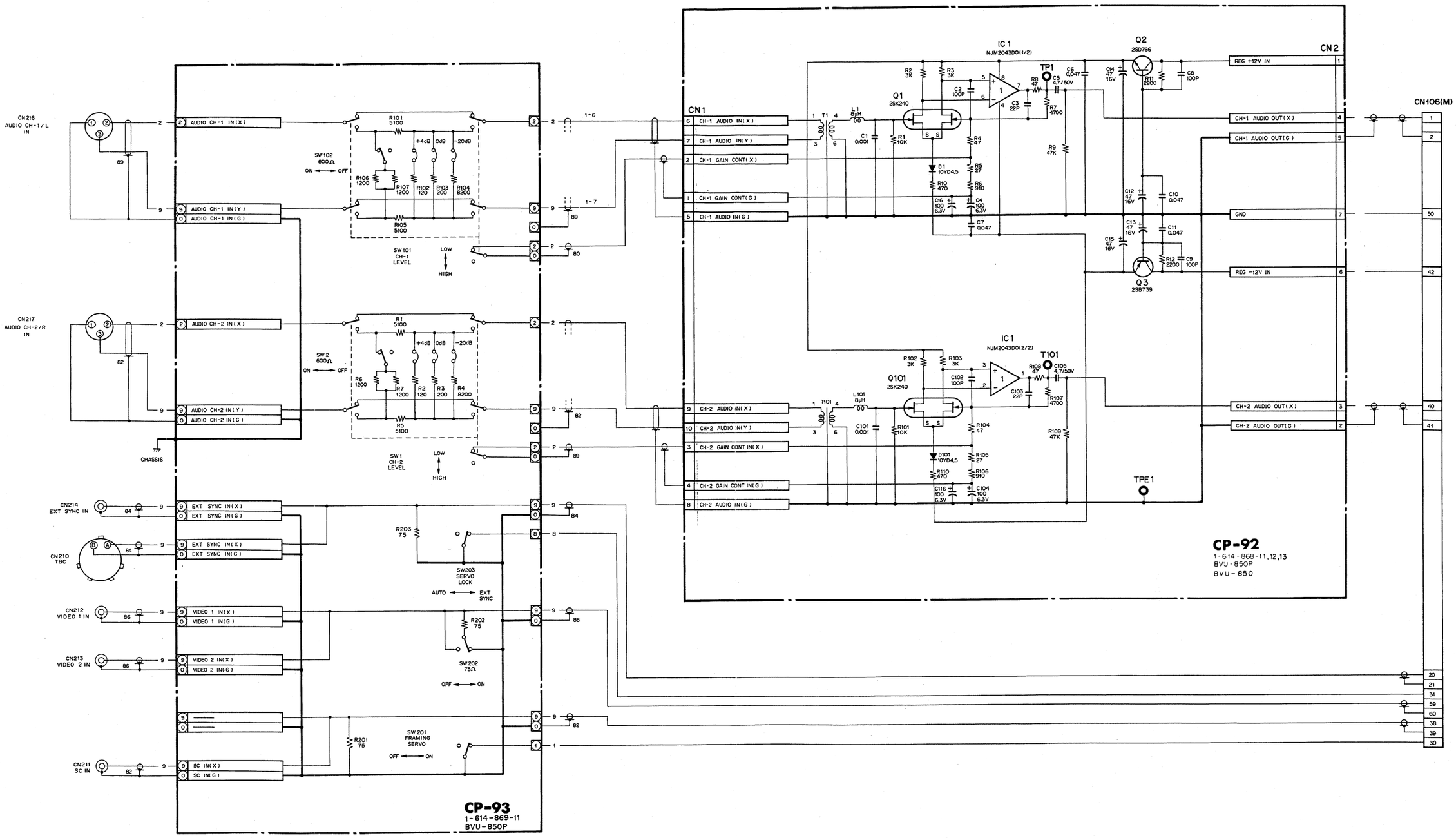

AU-62(1/2), DUS-71, FL-31 AU-6

AU-62(1/2); AUDIO PB/REC AMPLIFIER
DUS-71; VAR, INDUCTOR
FL-31; NOISE FILTER

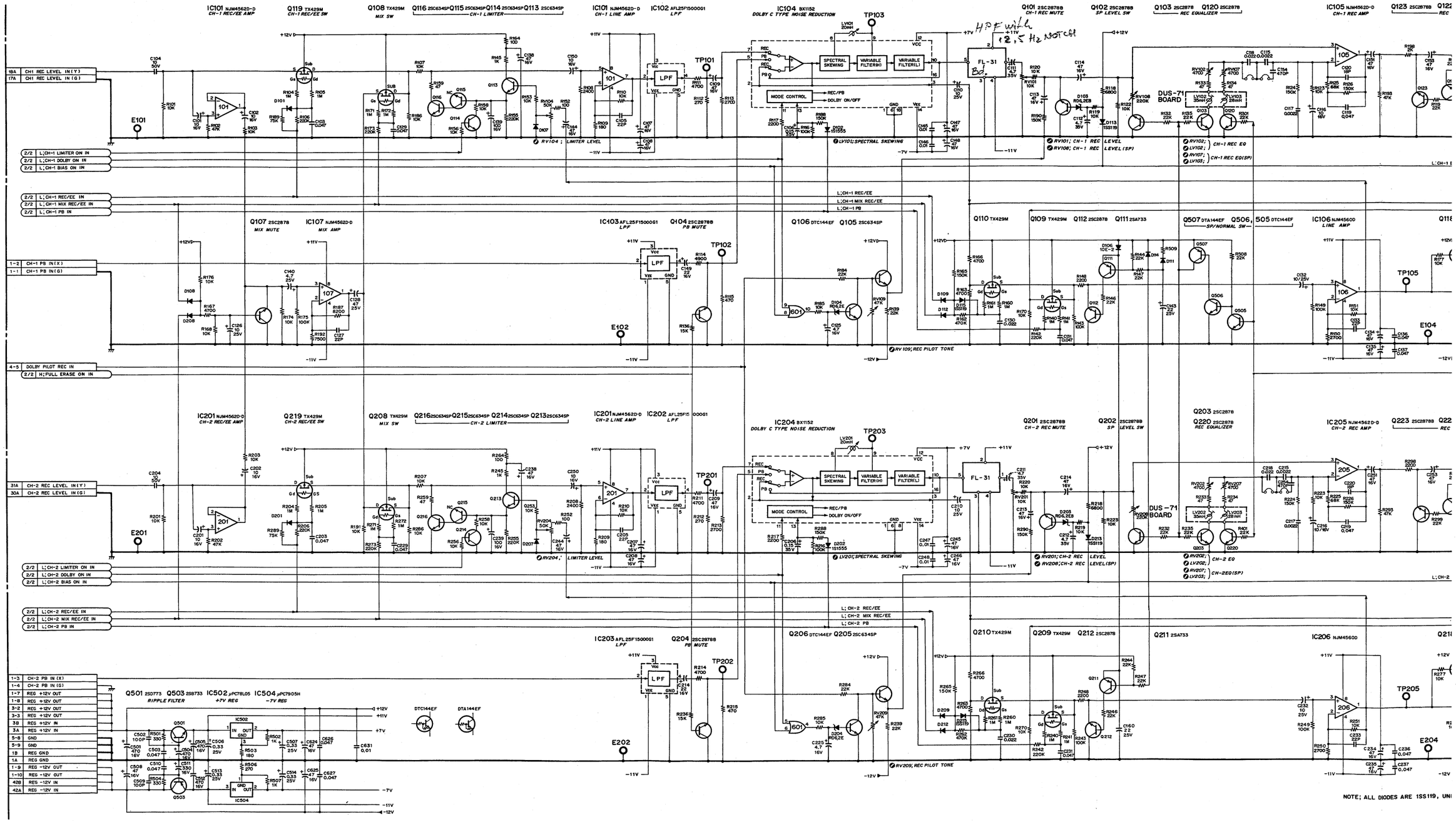

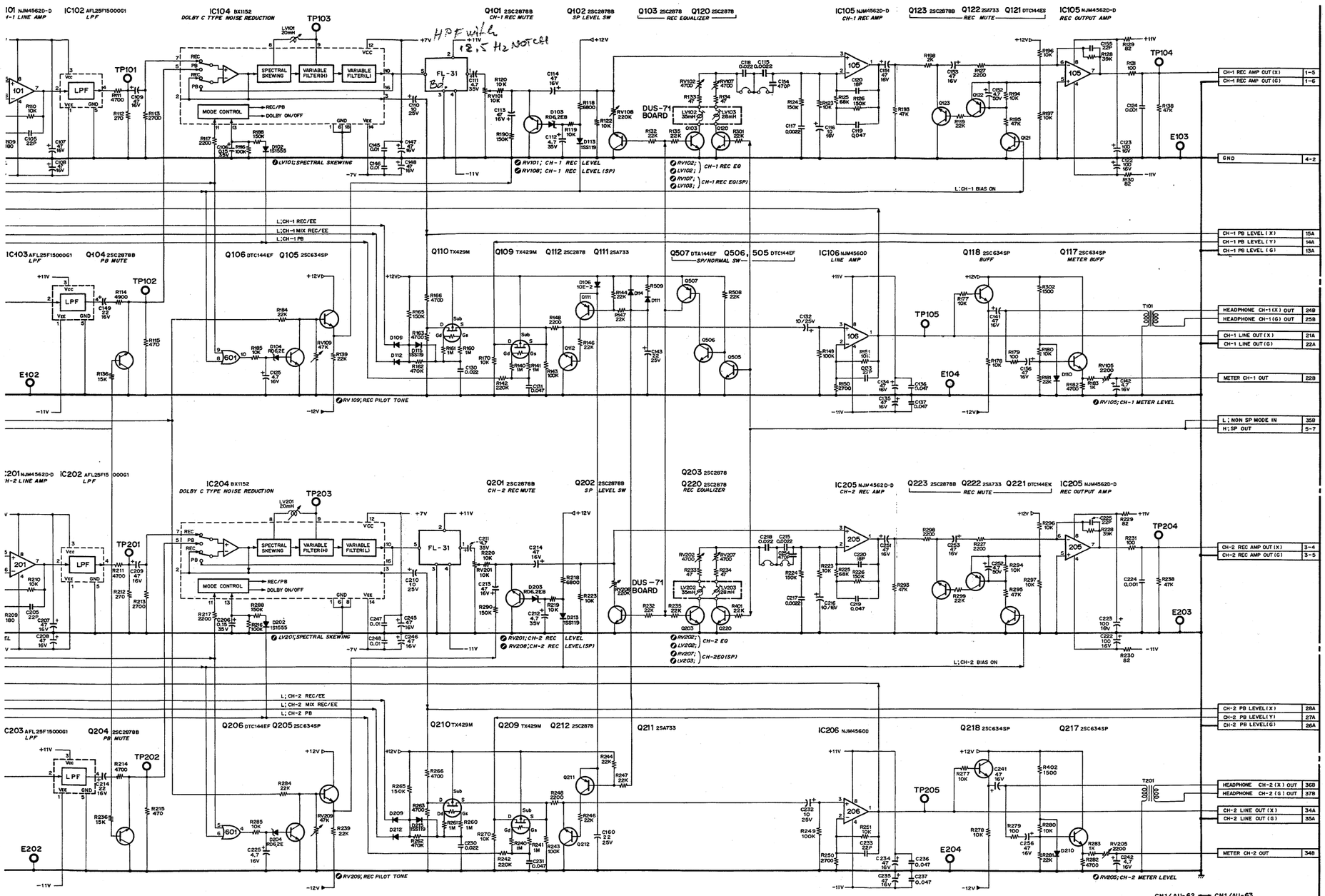

NOTE; ALL DIODES ARE 1SS119, UNLESS OTHERWISE SPECIFIED.

CN1/AU-62 ⟷ CN1/AU-63
CN2-1~CN2-3/AU-62 ⟷ CN11/AU-63
CN2-4 CN2-6/AU-62 ⟷ CN12/AU-63
CN3/AU-62 ⟷ CN3/AU-63
CN4/AU-62 ⟷ CN4/AU-63
CN5/AU-62 ⟷ CN5/AU-63

AU-62(1/2)
1-614-866-12,13
BVU-850P····· AU-62
BVU-850·····AU-62A

REF No.	TYPE	PIN No. +12V	+11V	+7V	GND	-7V	-11V	-12V
IC101	NJM4562D-D		8				4	
102	AML25F15000G1		3		5		1	
103	AML25F15000G1		3		5		1	
104	BX1152			12	1, 6,18	14		
105	NJM4562D-D	*	*	*	*	*	*	*
106	NJM4562D-D		8				4	
107	NJM4562D-D		8				4	
201	NJM4562D-D		8				4	
202	AML25F15000G1		3		5		1	
203	AML25F15000G1		3		5		1	
204	BX1152			12	1, 6,18	14		
205	NJM4562D-D	*	*	*	*	*	*	*
206	NJM4562D-D		8				4	
502	μPC78L05	—	—	—	—	—	—	—
504	μPC7905H	—	—	—	—	—	—	—
601	TC4071BP	14			7			
602	NJM4562D-D	*	*	*	*	*	*	*
603	TC504013BP	14			7			
604	TC4011BP	14			7			
605	HD14538BP	16			8			
606	TC4071BP	14			7			
607	HD14538BP	16			8			
608	TC4001BP	14			7			
609	TC4011BP	14			7			
610	TC4011BP	14			7			
611	TC4071BP	14			7			
612	TC4011BP	14			7			
613	TC4001UBP	14			7			
614	TC4081BP	14			7			
615	NJM2903D	8			4			

* REFER TO SCHEMATIC

NOTE

	PAL	NTSC
C1	0.012	0.01
C2	0.012	0.01
C3	0.027	0.022
R6	180K	150K

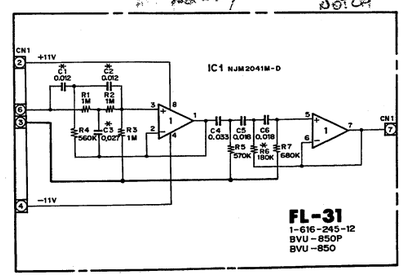

AU-62(2/2); AUDIO SYSTEM CONTROL TIMING GEN.

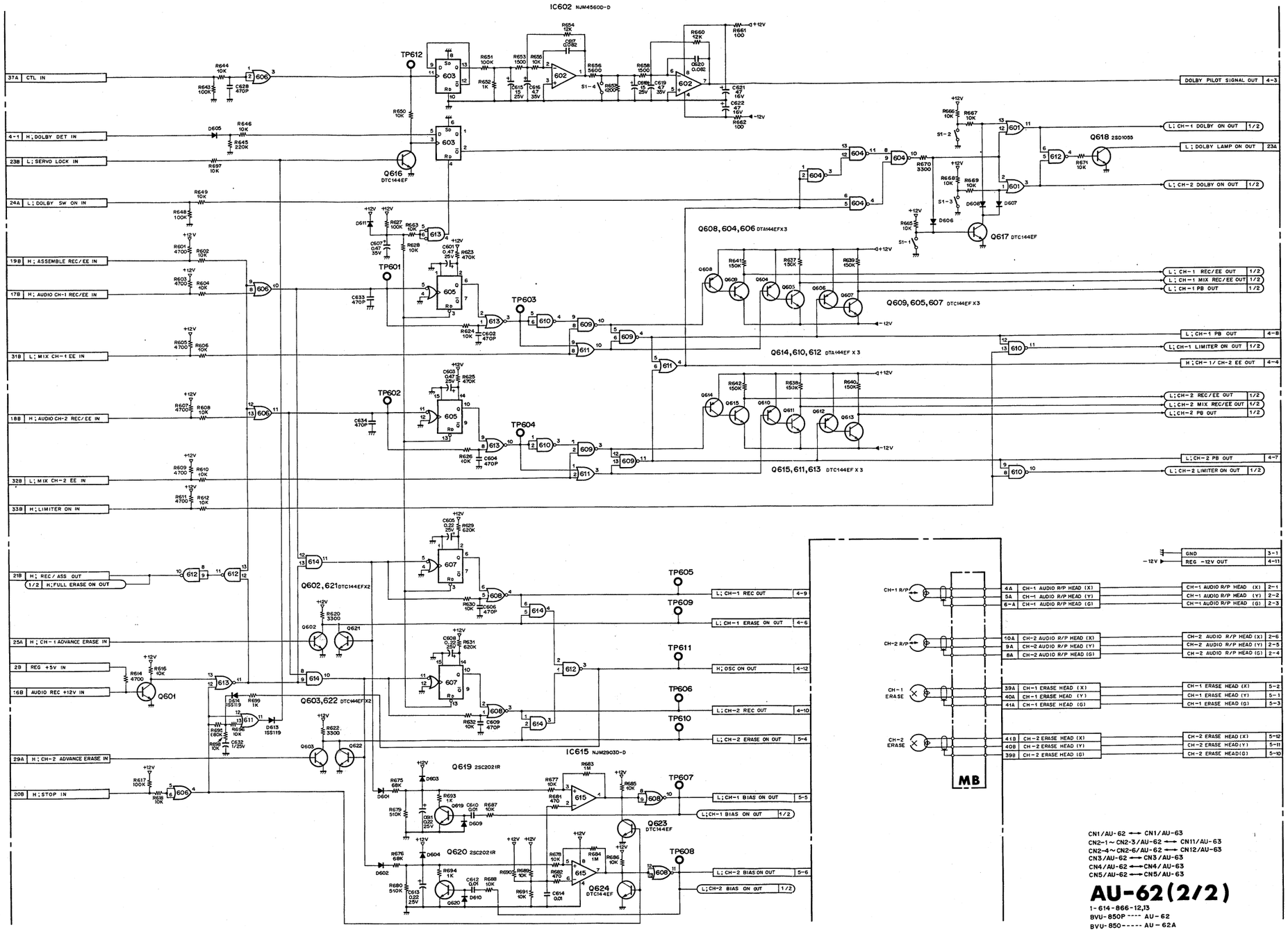

REF No.	TYPE	PIN No.						
		+12V	+11V	+7V	GND	-7V	-11V	-12V
IC 101	NJM4562D-D		8				4	
102	AML25F15000G1		3		5		1	
103	AML25F15000G1		3		5		1	
104	BX1152			12	1, 6,18	14		
105	NJM4562D-D	*	*	*	*	*	*	*
106	NJM4562D-D		8				4	
107	NJM4562D-D		8				4	
201	NJM4562D-D		8				4	
202	AML25F15000G1		3		5		1	
203	AML25F15000G1		3		5		1	
204	BX1152			12	1, 6,18	14		
205	NJM4562D-D	*	*	*	*	*	*	*
206	NJM4562D-D		8				4	
502	μPC78L05	—	—	—	—	—	—	—
504	μPC7905H	—	—	—	—	—	—	—
601	TC4071BP	14			7			
602	NJM4562D-D	*	*	*	*	*	*	*
603	TC5040I3BP	14			7			
604	TC4011BP	14			7			
605	HD14538BP	16			8			
606	TC4071BP	14			7			
607	HD14538BP	16			8			
608	TC4001BP	14			7			
609	TC4011BP	14			7			
610	TC4011BP	14			7			
611	TC4071BP	14			7			
612	TC4011BP	14			7			
613	TC4001UBP	14			7			
614	TC4081BP	14			7			
615	NJM2903D	8			4			

* REFER TO SCHEMATIC

AU-62(2/2)

1-614-866-12,13

BVU-850P ---- AU-62

BVU-850----- AU-62A

see 3-7 for details

AU-63 AU-

AU-63; AUDIO HEAD AMP/BIAS/ERASE OSC.

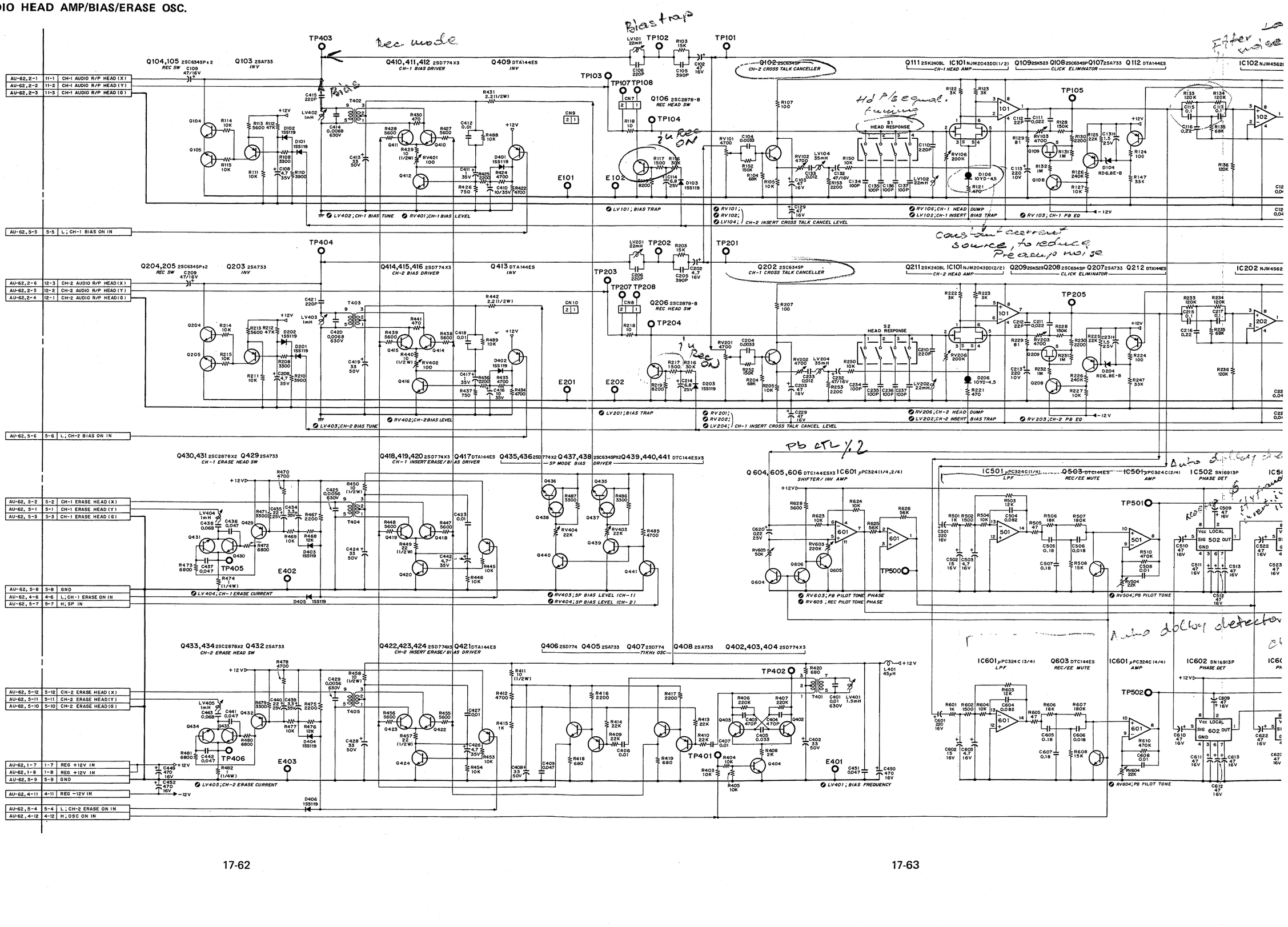

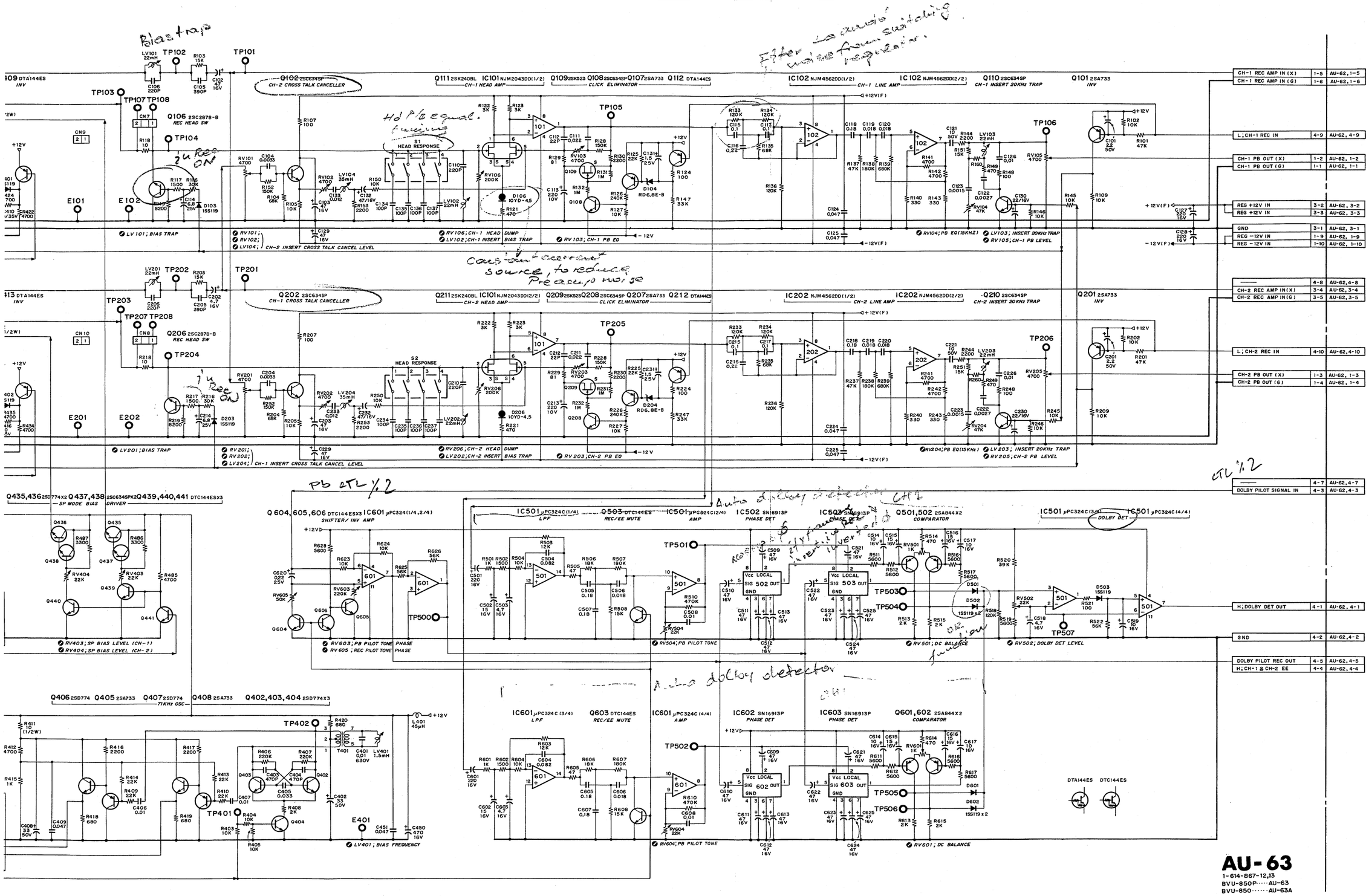

AU-63
1-614-867-12,13
BVU-850P·····AU-63
BVU-850·····AU-63A

AO-3; AUDIO OUTPUT AMPLIFIER
AO-2; MONITOR SELECT
HP-5; HEADPHONES JACK/LEVEL CONTROL

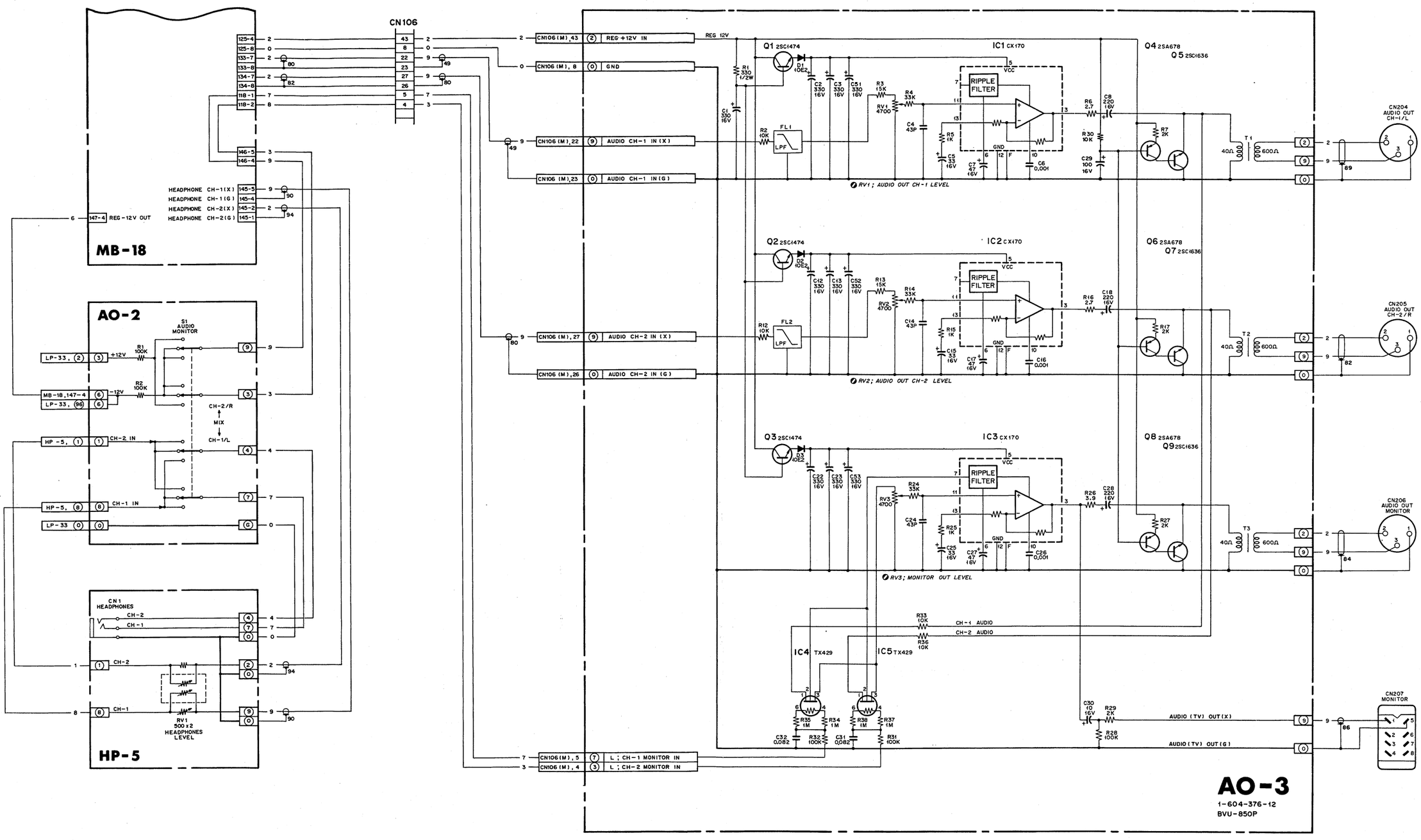

SV-52A(1/2) SV-

SV-52A(1/2); DRUM/CAPSTAN PWM SERVO

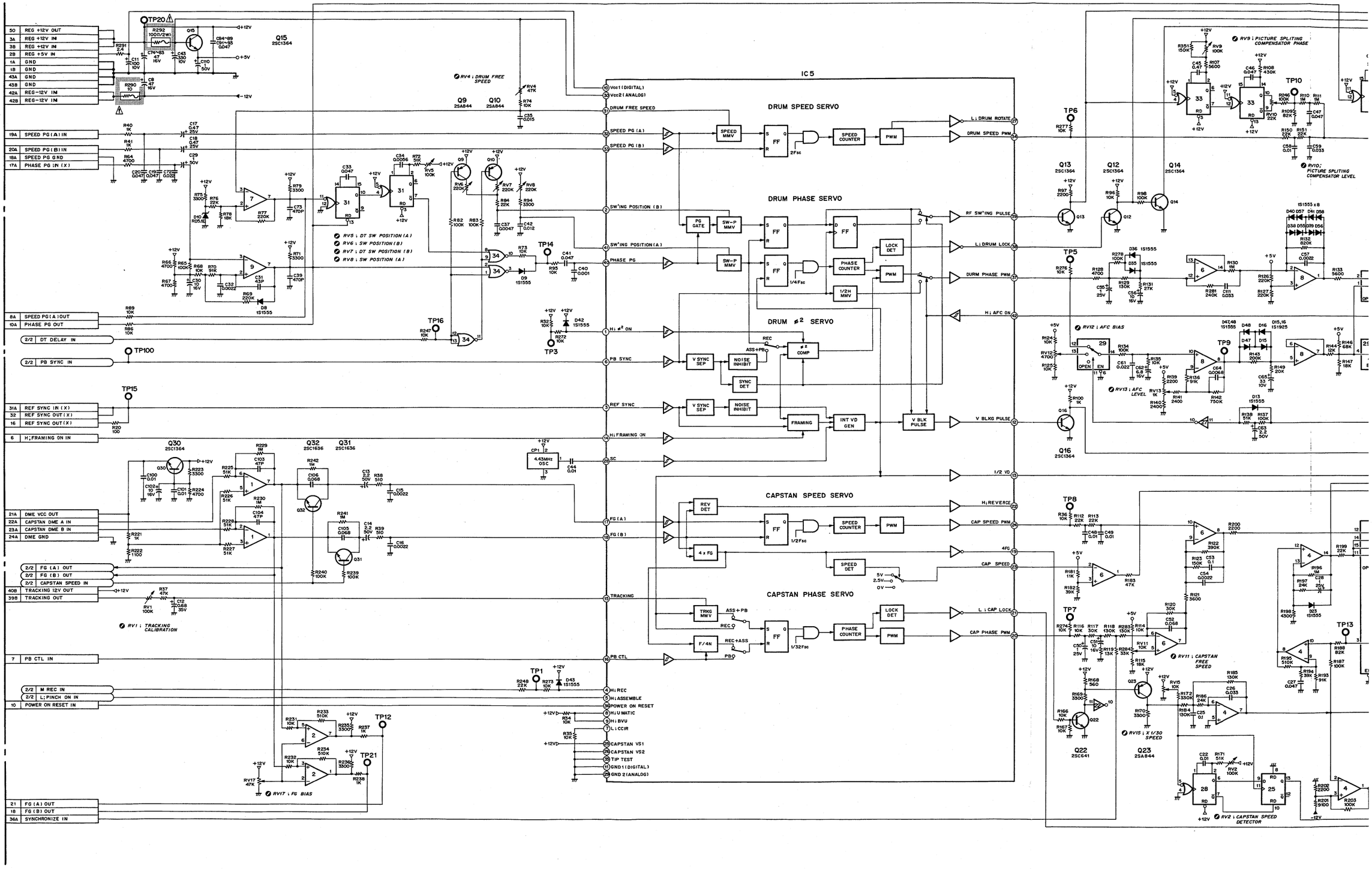

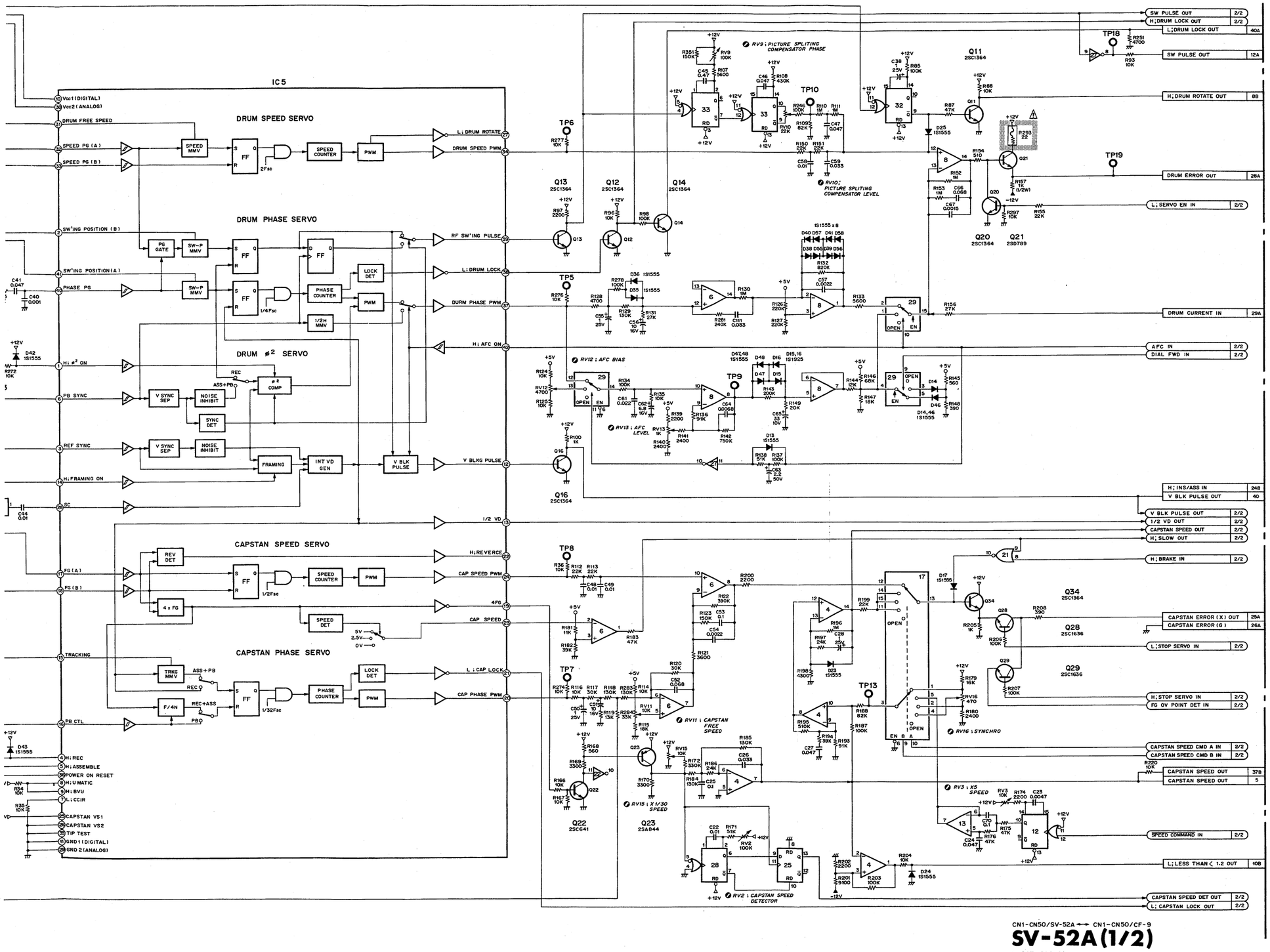

REF NO.	TYPE	PIN NO.			
		+V(+12V)	+V(5V)	GND	-V(-12V)
IC 1	μPC4558C	8		4	
IC 2	NJM2903D	8		4	
IC 3	μPC4558C	8			4
IC 4	μPC324C	4			11
IC 5	CX194A	30	10	11,29	
IC 6	μPC324C	4		11	
IC 7	μPC311C	8		1,4	
IC 8	μPC324C	4		11	
IC 9	μPC311C	8		1,4	
IC 10	M54517P			8	
IC 11	TC4069UBP	14		7	
IC 12	MC14538BCP	16		8	
IC 13	μPC4558C	8			4
IC 14	TC4099BP	16		8	
IC 15	TC4016IBP	16		8	
IC 16	TC4053BP	16		8	
IC 17	TC4052BP	16		8	
IC 18	TC4099BP	16		8	
IC 19	TC4011BP	14		7	
IC 20	TC4023BP	14		7	
IC 21	TC4001BP	14		7	
IC 22	TC4069UBP	14		7	
IC 23	TC4030BP	14		7	
IC 24	TC4011BP	14		7	
IC 25	TC4013BP	14		7	
IC 26	TC4001BP	14		7	
IC 27	TC4069UBP	14		7	
IC 28	MC14538BCP	16		8	
IC 29	TC4053BP	16		8	
IC 30	TC4011BP	14		7	
IC 31	MC14538BCP	16		8	
IC 32	MC14538BCP	16		8	
IC 33	MC14538BCP	16		8	
IC 34	TC4001BP	14		7	

NOTE:

The shaded and ⚠-marked components are critical to safety.
Replace only with same components as specified.

CN1-CN50/SV-52A ⟷ CN1-CN50/CF-9

SV-52A(1/2)

1-607-914-14
BVU-850P

SV-52A(2/2); SERVO TIMING GEN.

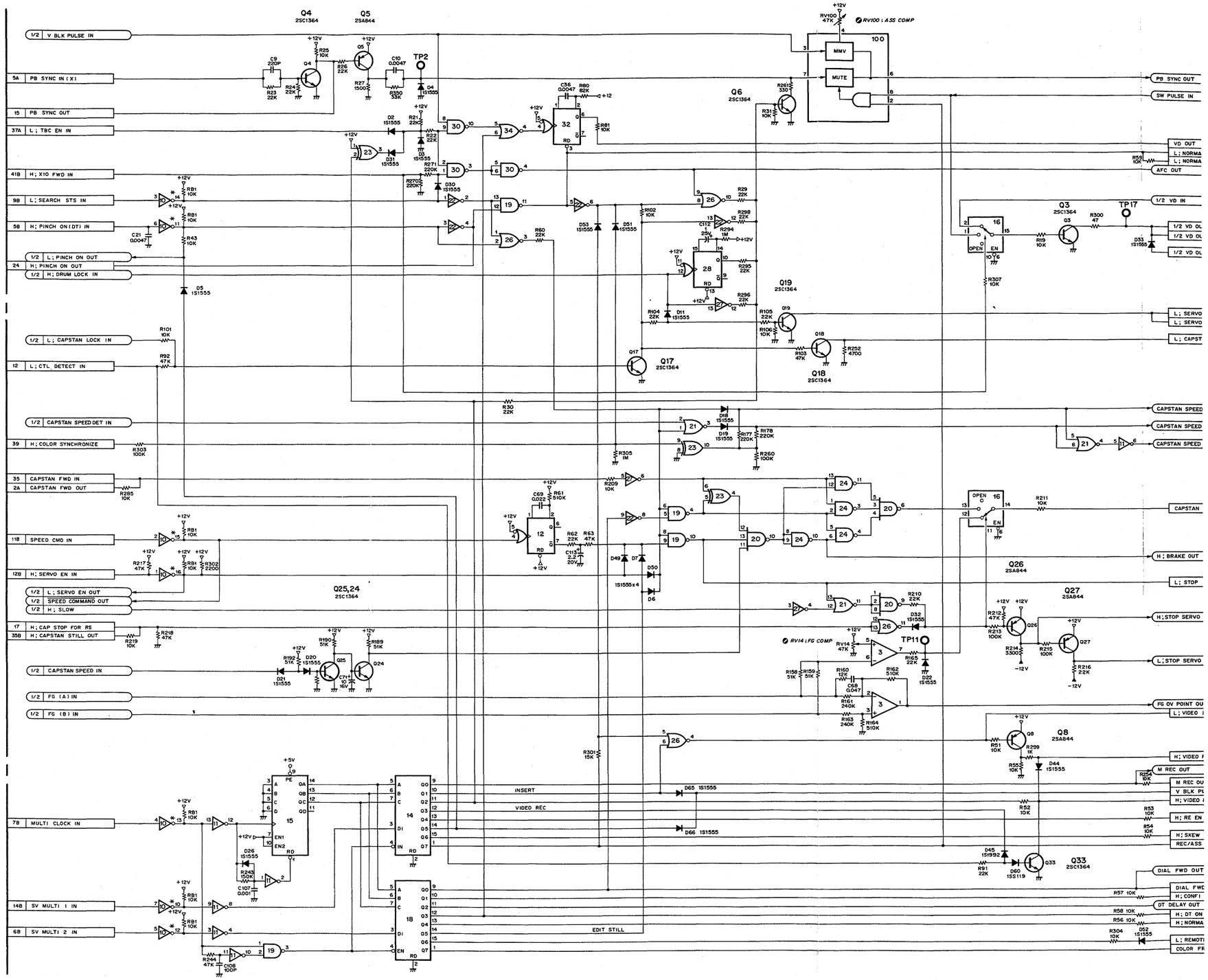

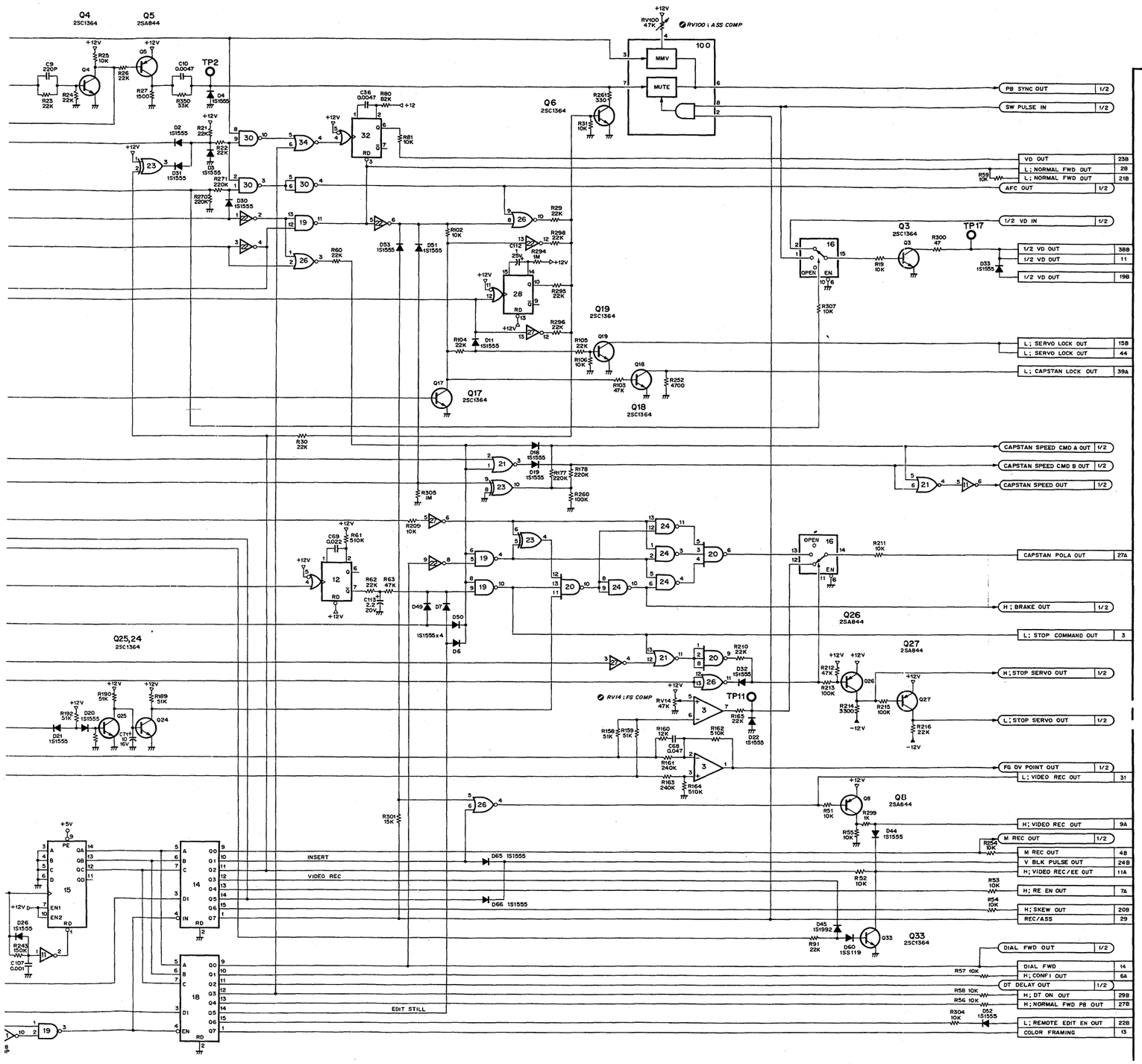

REF NO.	TYPE	P I N NO. +V(+12V)	+V(5V)	GND	-V(-12V)
IC 1	μPC4558C	8		4	
IC 2	NJM2903D	8		4	
IC 3	μPC4558C	8			4
IC 4	μPC324C	4			11
IC 5	CX194A	30	10	11,29	
IC 6	μPC324C	4		11	
IC 7	μPC311C	8		1,4	
IC 8	μPC324C	4		11	
IC 9	μPC311C	8		1,4	
IC 10	M54517P			6	
IC 11	TC4069UBP	14		7	
IC 12	MC14538BCP	16		8	
IC 13	μPC4558C	8			4
IC 14	TC4099BP	16		8	
IC 15	TC40161BP	16		8	
IC 16	TC4053BP	16		8	
IC 17	TC4052BP	16		8	
IC 18	TC4099BP	16		8	
IC 19	TC4011BP	14		7	
IC 20	TC4023BP	14		7	
IC 21	TC4001BP	14		7	
IC 22	TC4069UBP	14		7	
IC 23	TC4030BP	14		7	
IC 24	TC4011BP	14		7	
IC 25	TC4013BP	14		7	
IC 26	TC4001BP	14		7	
IC 27	TC4069UBP	14		7	
IC 28	MC14538BCP	16		8	
IC 29	TC4053BP	16		8	
IC 30	TC4011BP	14		7	
IC 31	MC14538BCP	16		8	
IC 32	MC14538BCP	16		8	
IC 33	MC14538BCP	16		8	
IC 34	TC4001BP	14		7	

		GND	1
		GND	2
	-12V	REG-12V OUT	4
4A	L; INPUT VIDEO DET IN	L; INPUT VIDEO DET OUT	49
13A	L; FRAMING EN IN	L; FRAMING EN OUT	46
14A	CTL HEAD (X)	CTL HEAD (X)	36
15A	CTL HEAD (Y)	CTL HEAD (Y)	37
16A	CTL HEAD (G)	CTL HEAD (G)	38
30A	PB BURST PULSE IN(X)	PB BURST PULSE OUT(X)	33
32A	REF BURST PULSE IN(X)	REF BURST PULSE OUT(X)	23
33A	DUB 1ST FIELD IN	DUB 1ST FIELD OUT	22
34A	LINE / DUB SW IN	LINE / DUB SW OUT	20
35A	REMOTE CTL OUT	REMOTE CTL IN	19
41A	PB CF PULSE OUT	PB CF PULSE IN	8
13B	L; REMOTE(2) IN	L; REMOTE(2) OUT	43
16B	EXT SYNC IN	EXT SYNC OUT	45
17B	L; COLOR FRAMING OUT	L; COLOR FRAMING IN	47
18B	L; STANDBY STS IN	L; STANDBY STS OUT	48
25B	H; TAPE FWD OUT	H; TAPE FWD IN	42
26B	CTL COUNT PULSE OUT	CTL COUNT PULSE IN	41
28B	H; REC/ASS IN	H; REC/ASS OUT	34
32B	L; REEL STOP IN	L; REEL STOP OUT	27
33B	H; REEL FWD IN	H; REEL FWD OUT	26
34B	H; CAPSTAN FWD OUT	H; CAPSTAN FWD IN	25
31B	CTL PULSE OUT	CTL PULSE IN	30
36B	H; CAPSTAN ROT OUT	H; CAPSTAN ROT IN	9

R245 10K

CN1-CN50/SV-52A ⟷ CN1-CN50/CF-9

SV-52A(2/2)

1-607-914-14
BVU-850P

CF-9(1/2); CTL REC/PB AMPLIFIER

REF NO.	TYPE	PIN NO		
		+12V	GND	-12V
IC501	TC4030BP	14	7	
IC502	TC4011BP	14	7	
IC503	TC4001BP	14	7	
IC504	TC5040136P	14	7	
IC505	TC5040278P	16	8	
IC506	TC4001BP	14	7	
IC507	TC4510BP	16	8	
IC508	TC4081BP	14	7	
IC509	TC4012BP	14	7	
IC510	MC14538BCP	16	8	
IC511	TC4001BP	14	7	
IC512	TC4053BP	16	8	
IC513	TC4069BP	14	7	
IC514	TC4011BP	14	7	
IC515	TC4053BP	16	8	
IC516	TC4069BP	14	7	
IC517	TC4001BP	14	7	
IC518	MC14538BCP	16	8	
IC519	TC4011BP	14	7	
IC520	TC4066BP	14	7	
IC521	MC14584BCP	14	7	
IC522	NJM4558D-D	8	4	
IC523	BX3914	18	17	
IC524	TC4011BP	14	7	
IC525	TC4510BP	16	8	
IC526	μPC4558C	8	—	4

CF-9(2/2); COLOR FRAMING

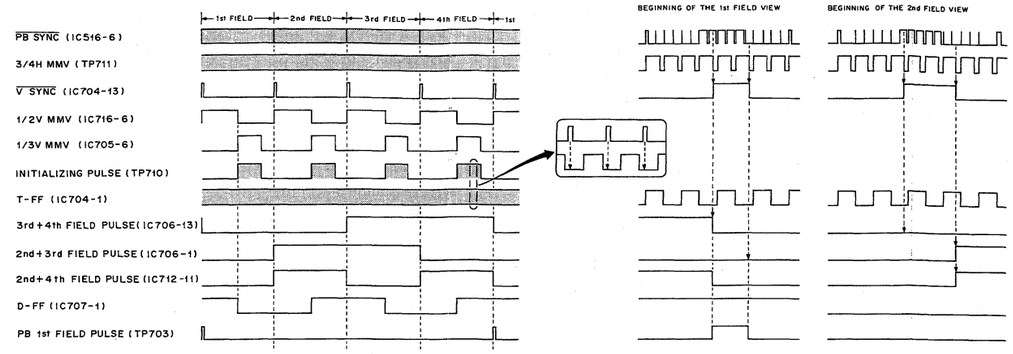

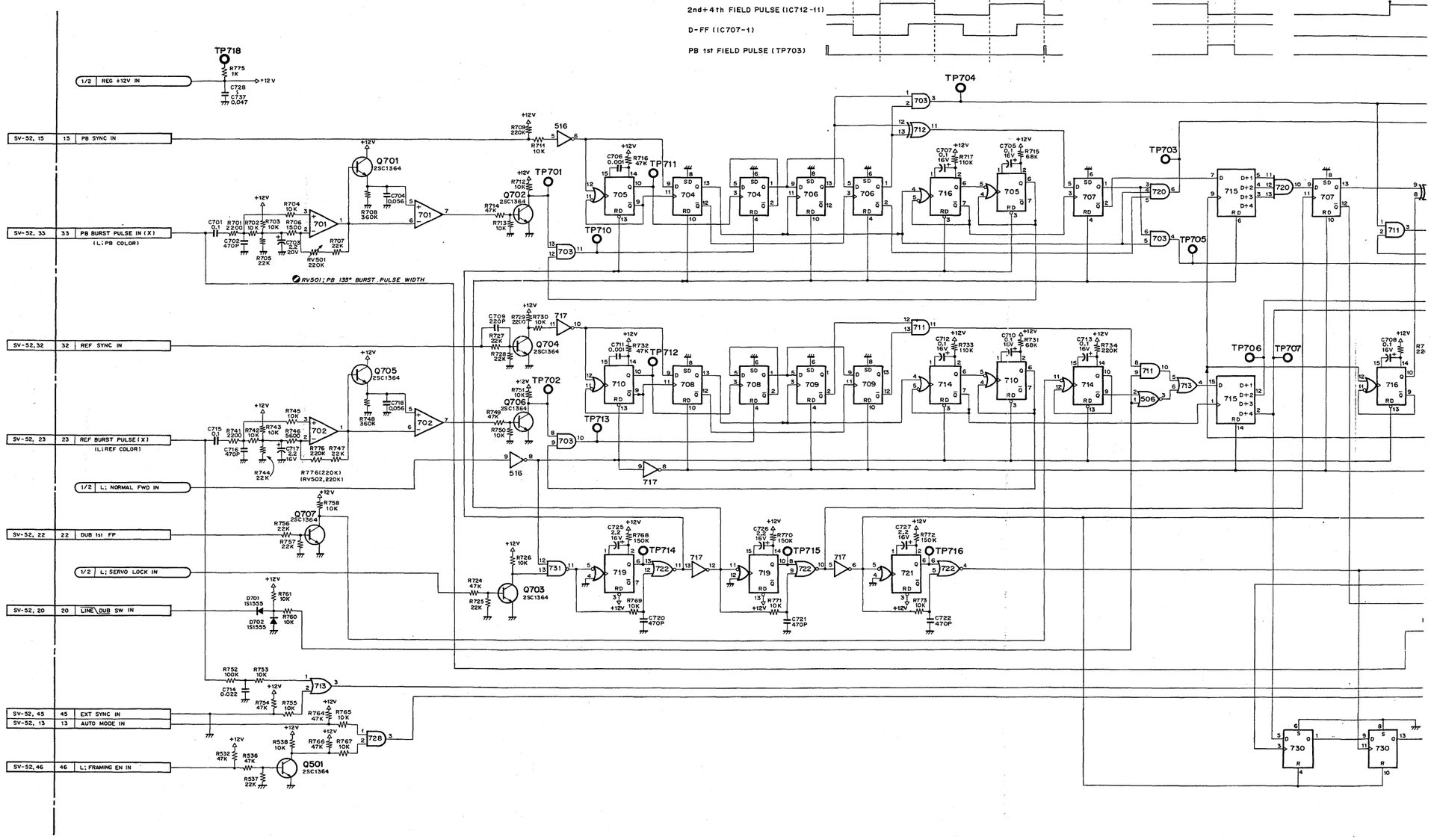

CF-9(2/2)

CF-9(2/2)

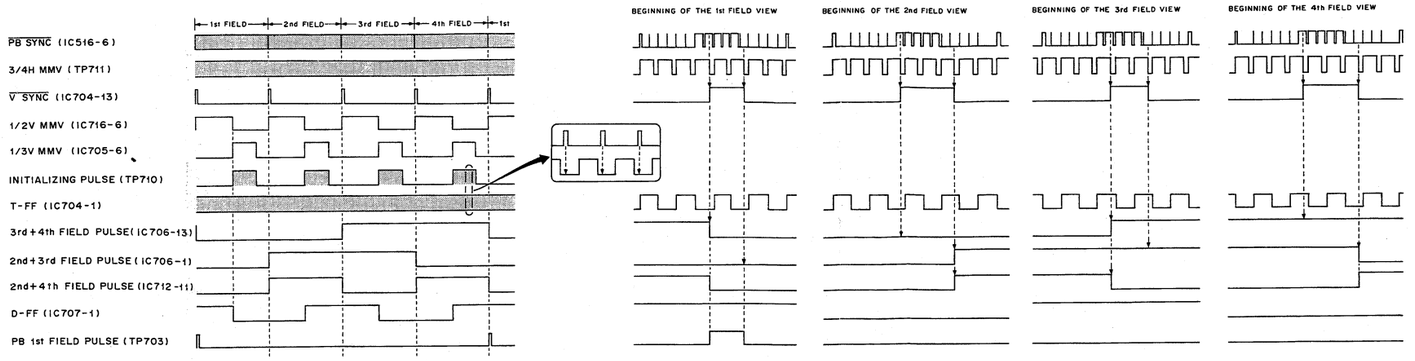

REF NO.	TYPE	PIN NO +12V	PIN NO GND
IC 701	TL082CP	8	4
IC 702	TL082CP	8	4
IC 703	TC4081BP	14	7
IC 704	TC504013BP	14	7
IC 705	HD14538BP	16	8
IC 706	TC504013BP	14	7
IC 707	TC504013BP	14	7
IC 708	TC504013BP	14	7
IC 709	TC504013BP	14	7
IC 710	HD14538BP	14	7
IC 711	TC4081BP	14	7
IC 712	TC4030BP	14	7
IC 713	TC4071BP	14	7
IC 714	HD14538BP	16	8
IC 715	TC4015BP	16	8
IC 716	HD14538BP	16	8
IC 717	TC4069UBP	14	7
IC 718	TC4015BP	16	8
IC 719	HD14538BP	16	8
IC 720	TC4073BP	14	7
IC 721	HD14538BP	16	8
IC 722	TC4001BP	14	7
IC 723	TC504013BP	14	7
IC 724	HD14538BP	16	8
IC 725	TC504013BP	14	7
IC 726	TC4073BP	14	7
IC 727	TC4071BP	14	7
IC 728	TC4081BP	14	7
IC 729	TC504013BP	14	7
IC 730	TC504013BP	14	7
IC 731	TC4011BP	14	7

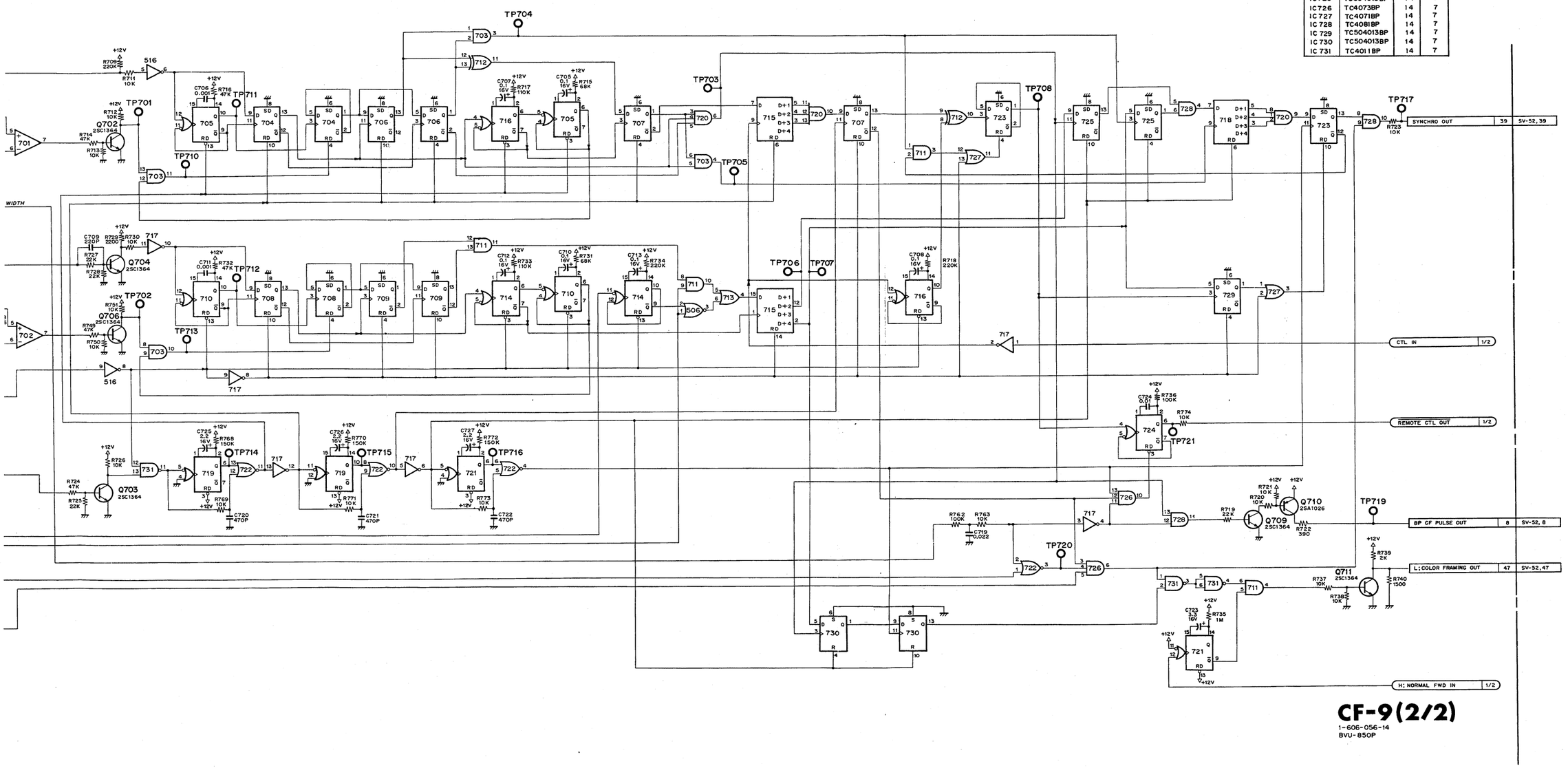

CF-9(2/2)

1-606-056-14
BVU-850P

RS-3(1/2); REEL SERVO

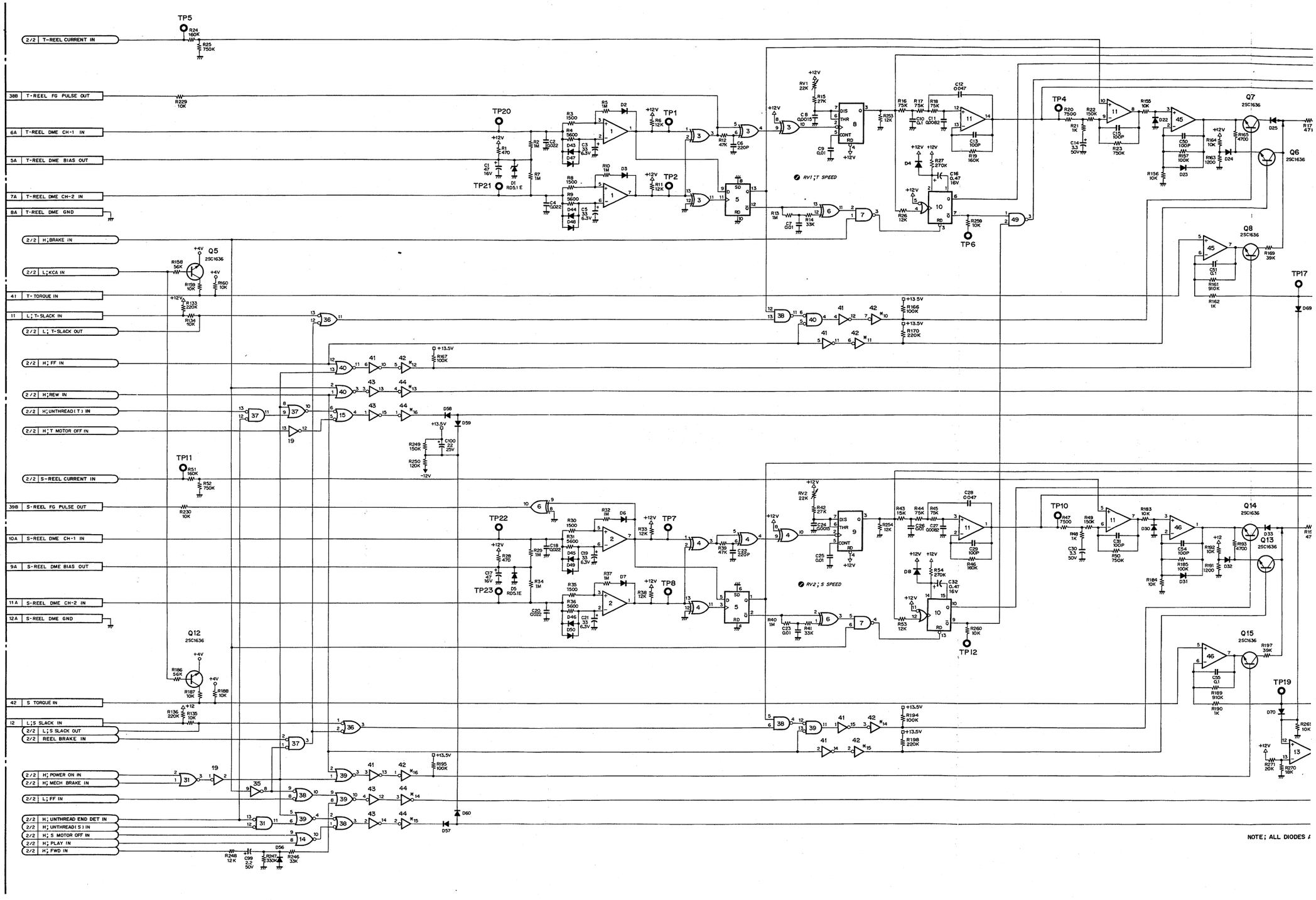

RS-3(1/2)

RS-3(1/2)

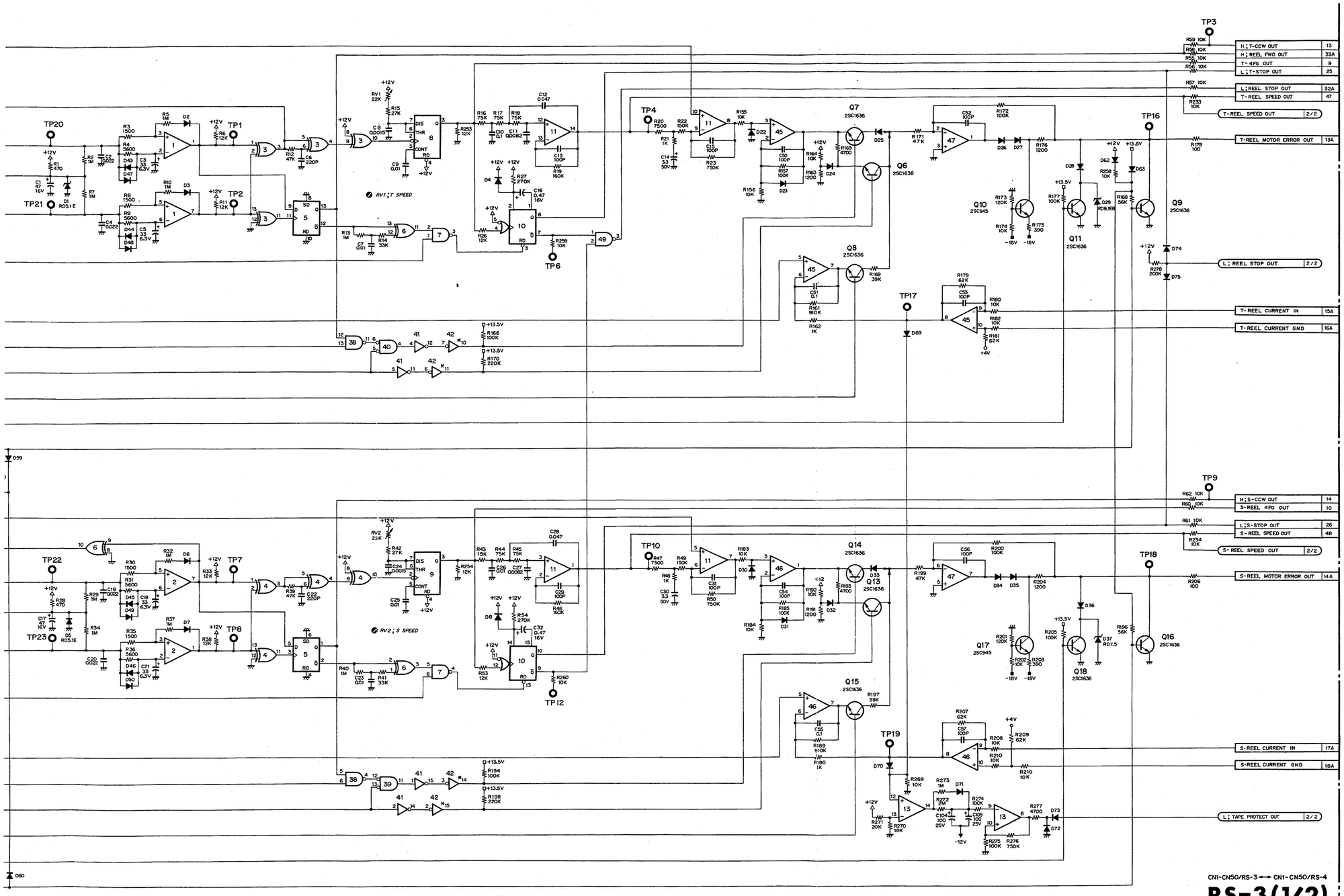

REF.NO.	TYPE	PIN NO.				
		+V(+13.5V)	+V(+12V)	GND	-V(-12V)	-V(-18V)
IC 1	NJM2903D		8	4		
2	NJM2903D		8	4		
3	TC4030BP		14	7		
4	TC4030BP		14	7		
5	TC4013BP		14	7		
6	TC4030BP		14	7		
7	TC4011BP		14	7		
8	NE555N		8	1		
9	NE555N		8	1		
10	MC14538BCP		16	8		
11	μPC324C		4		11	
12	NE555N		8	1		
13	μPC324C		4		11	
14	TC4001BP		14	7		
15	TC4011BP		14	7		
16	TC4066BP		14	7		
17	μPC324C		4		11	
18	TC4066BP		14	7		
19	TC4069UBP		14	7		
20	TC4069UBP		14	7		
21	TC4011BP		14	7		
22	TC4066BP		14	7		
23	M54517P			8		
24	TC4016BP		16	8		
25	TC4099BP		16	8		
26	TC4099BP		16	8		
27	TC4001BP		14	7		
28	TC4069UBP		14	7		
29	TC4001BP		14	7		
30	TC4001BP		14	7		
31	TC4001BP		14	7		
32	TC4011BP		14	7		
33	TC4001BP		14	7		
34	TC4001BP		14	7		
35	TC4069UBP		14	7		
36	TC4011BP		14	7		
37	TC4001BP		14	7		
38	TC4011BP		14	7		
39	TC4001BP		14	7		
40	TC4001BP		14	7		
41	TC5067BP		16	8		
42	M54519P				8	
43	TC5067BP		16	8		
44	M54519P					8
45	μPC324C		4		11	
46	μPC324C		4		11	
47	μPC4558C	8				4
48	TC4001BP		14	7		
49	TC4011BP		14	7		
50	TC4001BP		14	7		
51	MC14538BCP		16	8		—

NOTE; ALL DIODES ARE 1S1555, UNLESS OTHERWISE SPECIFIED.

CN1-CN50/RS-3 ⟷ CN1-CN50/RS-4

RS-3(1/2)

1-604-335-13

8VU-850P

RS-3(2/2) RS-3

RS-3(2/2); REEL SERVO

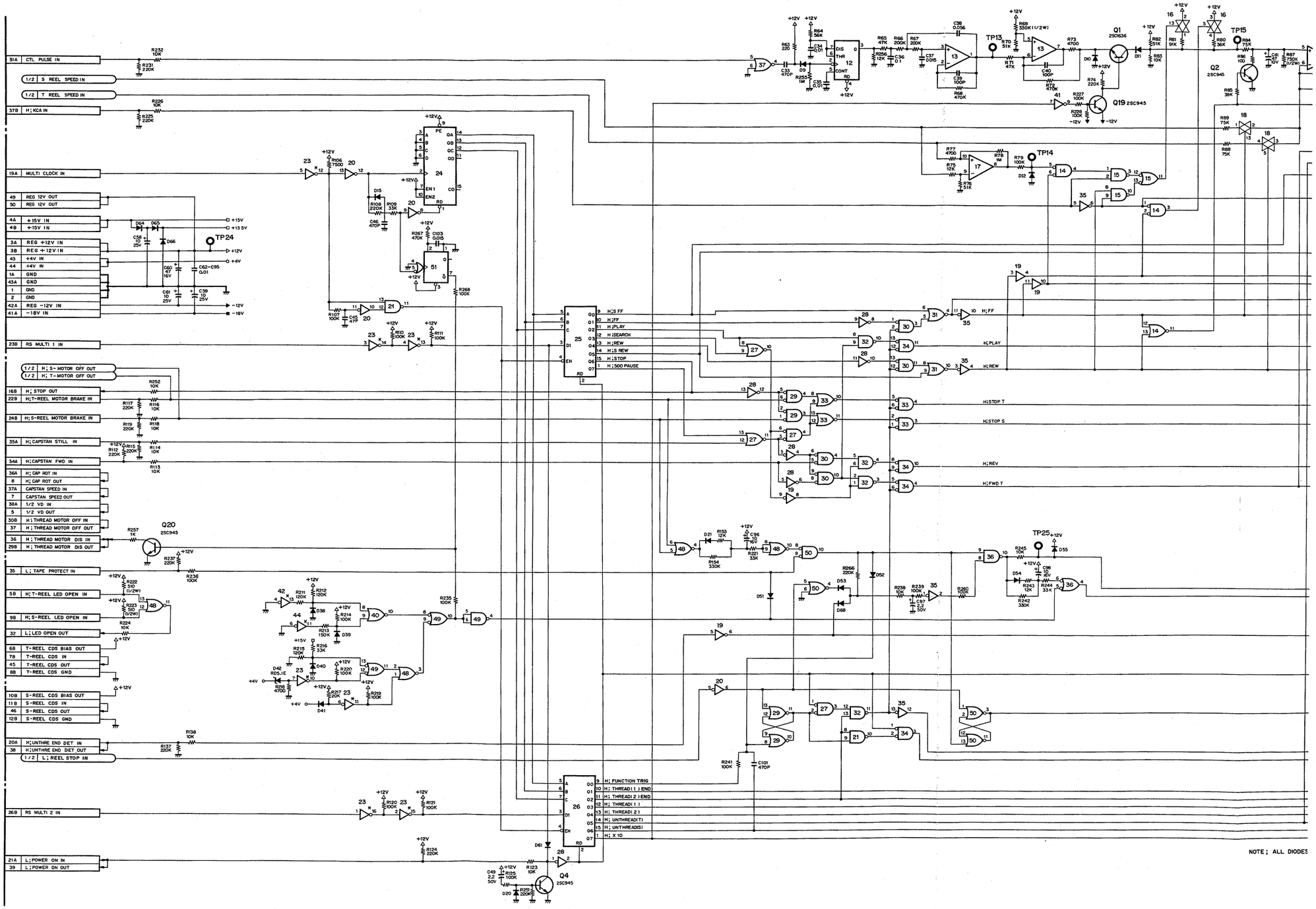

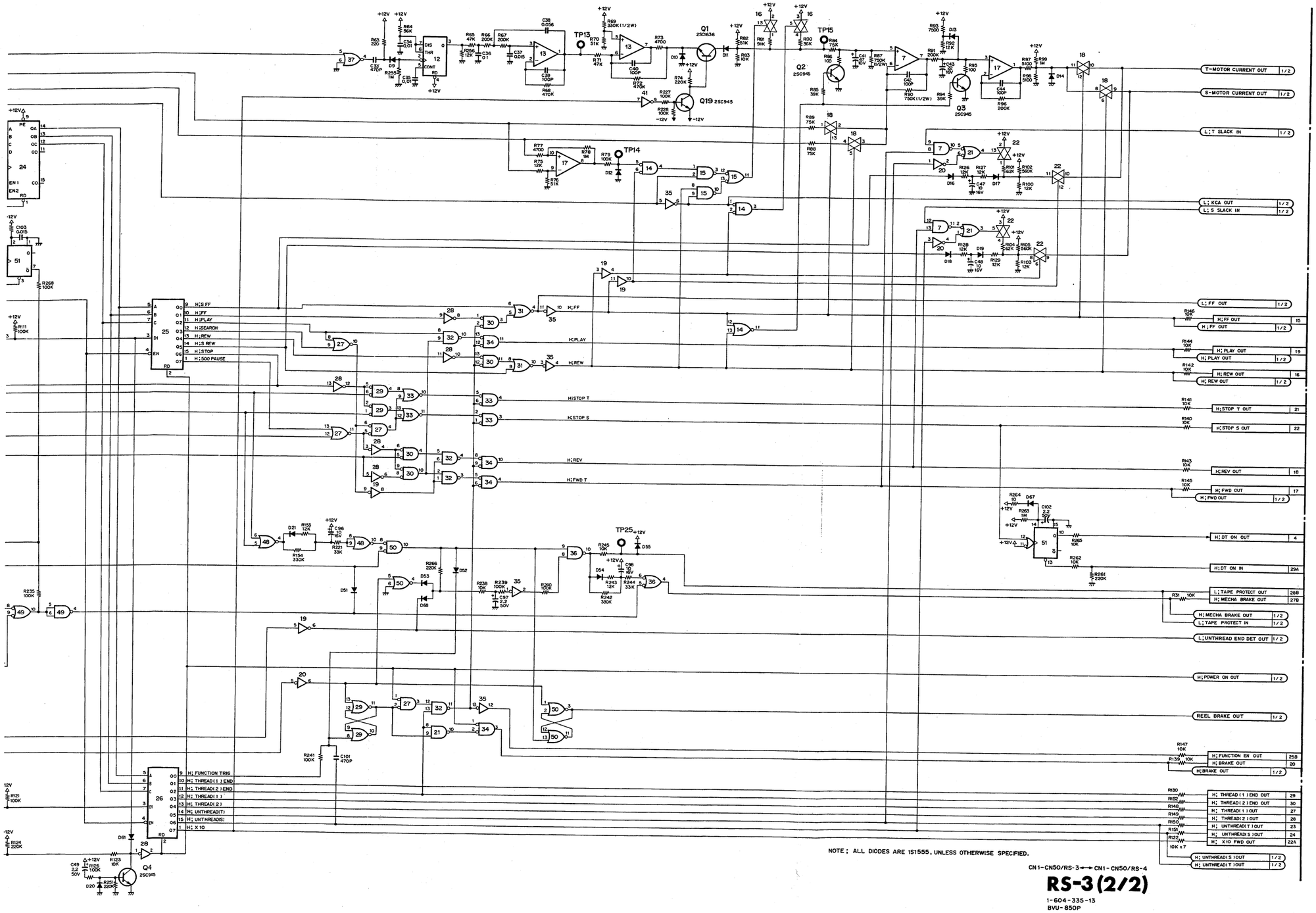

REF.NO.	TYPE	PIN NO.				
		+V(+13.5V)	+V(+12V)	GND	-V(-12V)	-V(-18V)
IC 1	NJM2903D		8	4		
2	NJM2903D		8	4		
3	TC4030BP		14	7		
4	TC4030BP		14	7		
5	TC4013BP		14	7		
6	TC4030BP		14	7		
7	TC4011BP		14	7		
8	NE555N		8	1		
9	NE555N		8	1		
10	MC14538BCP		16	8		
11	μPC324C		4		11	
12	NE555N		8	1		
13	μPC324C		4		11	
14	TC4001BP		14	7		
15	TC4011BP		14	7		
16	TC4066BP		14	7		
17	μPC324C		4		11	
18	TC4066BP		14	7		
19	TC4069UBP		14	7		
20	TC4069UBP		14	7		
21	TC4011BP		14	7		
22	TC4066BP		14	7		
23	M54517P			8		
24	TC40161BP		16	8		
25	TC4099BP		16	8		
26	TC4099BP		16	8		
27	TC4001BP		14	7		
28	TC4069UBP		14	7		
29	TC4001BP		14	7		
30	TC4001BP		14	7		
31	TC4001BP		14	7		
32	TC4011BP		14	7		
33	TC4001BP		14	7		
34	TC4001BP		14	7		
35	TC4069UBP		14	7		
36	TC4011BP		14	7		
37	TC4001BP		14	7		
38	TC4011BP		14	7		
39	TC4001BP		14	7		
40	TC4001BP		14	7		
41	TC5067BP		16	8		
42	M54519P				8	
43	TC5067BP		16	8		
44	M54519P					8
45	μPC324C		4		11	
46	μPC324C		4		11	
47	μPC4558C	8				4
48	TC4001BP		14	7		
49	TC4011BP		14	7		
50	TC4001BP		14	7		
51	MC14538BCP		16	8		—

NOTE; ALL DIODES ARE 1S1555, UNLESS OTHERWISE SPECIFIED.

CN1-CN50/RS-3 ⟷ CN1-CN50/RS-4

RS-3(2/2)

1-604-335-13
8VU-850P

RS-4(1/2) RS-4(

RS-4(1/2); TAPE TENSION SERVO

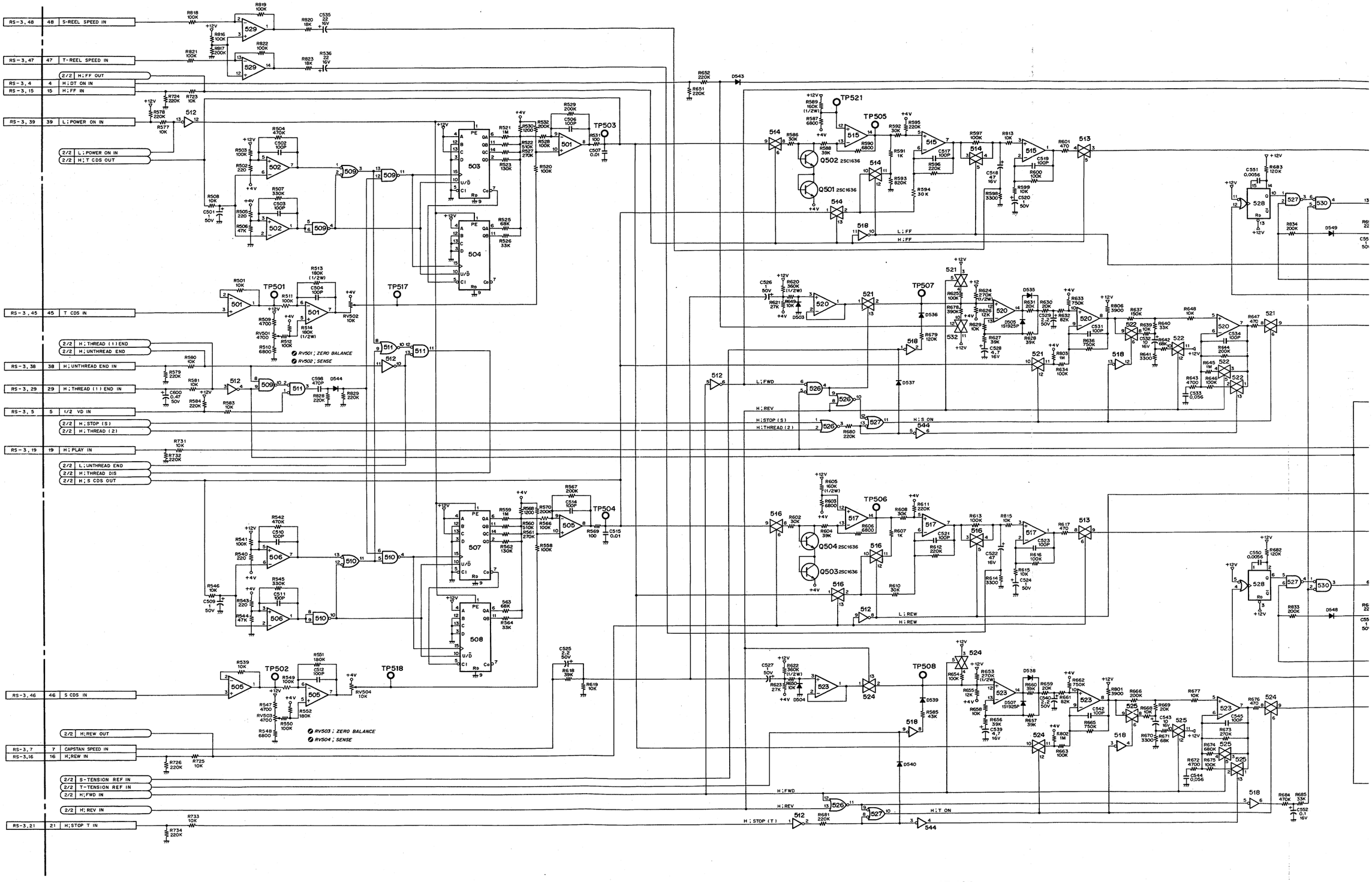

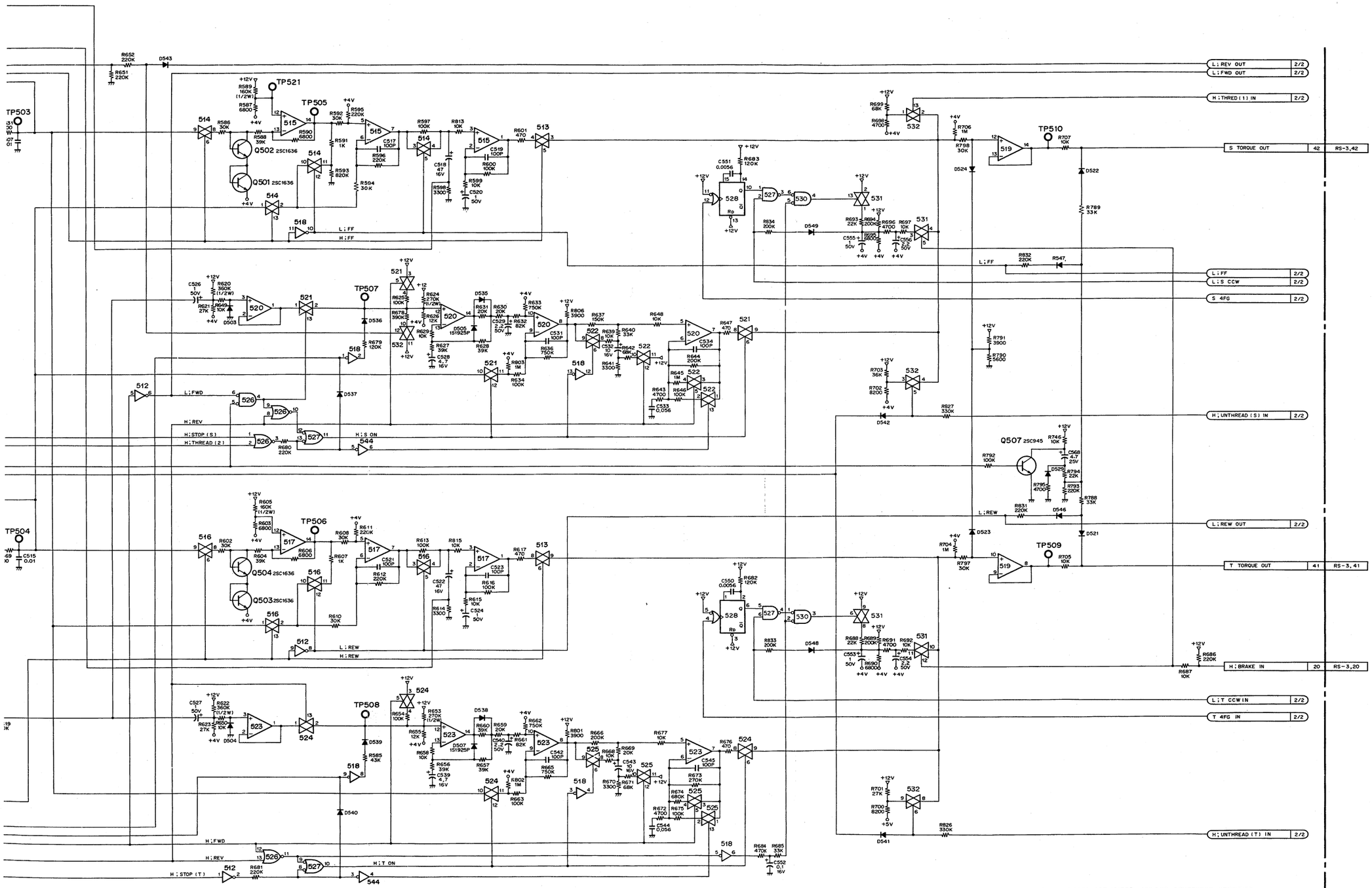

REF.NO.	TYPE	PIN NO. +V(+12V)	PIN NO. GND
IC 501	μPC324C	4	11
502	μPC324C	4	11
503	TC4516BP	16	8
504	TC4516BP	16	8
505	μPC324C	4	11
506	μPC324C	4	11
507	TC4516BP	16	8
508	TC4516BP	16	8
509	TC4011BP	14	7
510	TC4011BP	14	7
511	TC4001BP	14	7
512	TC4069UBP	14	7
513	TC4066BP	14	7
514	TC4066BP	14	7
515	μPC324C	4	11
516	TC4066BP	14	7
517	μPC324C	4	11
518	TC4069UBP	14	7
519	μPC324C	4	11
520	μPC324C	4	11
521	TC4066BP	14	7
522	TC4066BP	14	7
523	μPC324C	4	11
524	TC4066BP	14	7
525	TC4066BP	14	7
526	TC4001BP	14	7
527	TC4011BP	14	7
528	MC14538BC	16	8
529	μPC324C	4	11
530	TC4001BP	14	7
531	TC4066BP	14	7
532	TC4066BP	14	7
533	TC4011BP	14	7
534	TC4069UBP	14	7
535	TC4001BP	14	7
536	MC14538BCP	16	8
537	TC4001BP	14	7
538	TC4001BP	14	7
539	TC4001BP	14	7
540	TC4001BP	14	7
541	μPC324C	4	11
542	TC4011BP	14	7
543	TC4001BP	14	7
544	TC4069UBP	14	7
545	TC4011BP	14	7
546	TC4078BP	14	7

NOTE; ALL DIODES ARE 1S1555, UNLESS OTHERWISE SPECIFIED.

RS-4(1/2)

1-604-336-14

BVU-850P

RS-4(2/2); TAPE TENSION SERVO

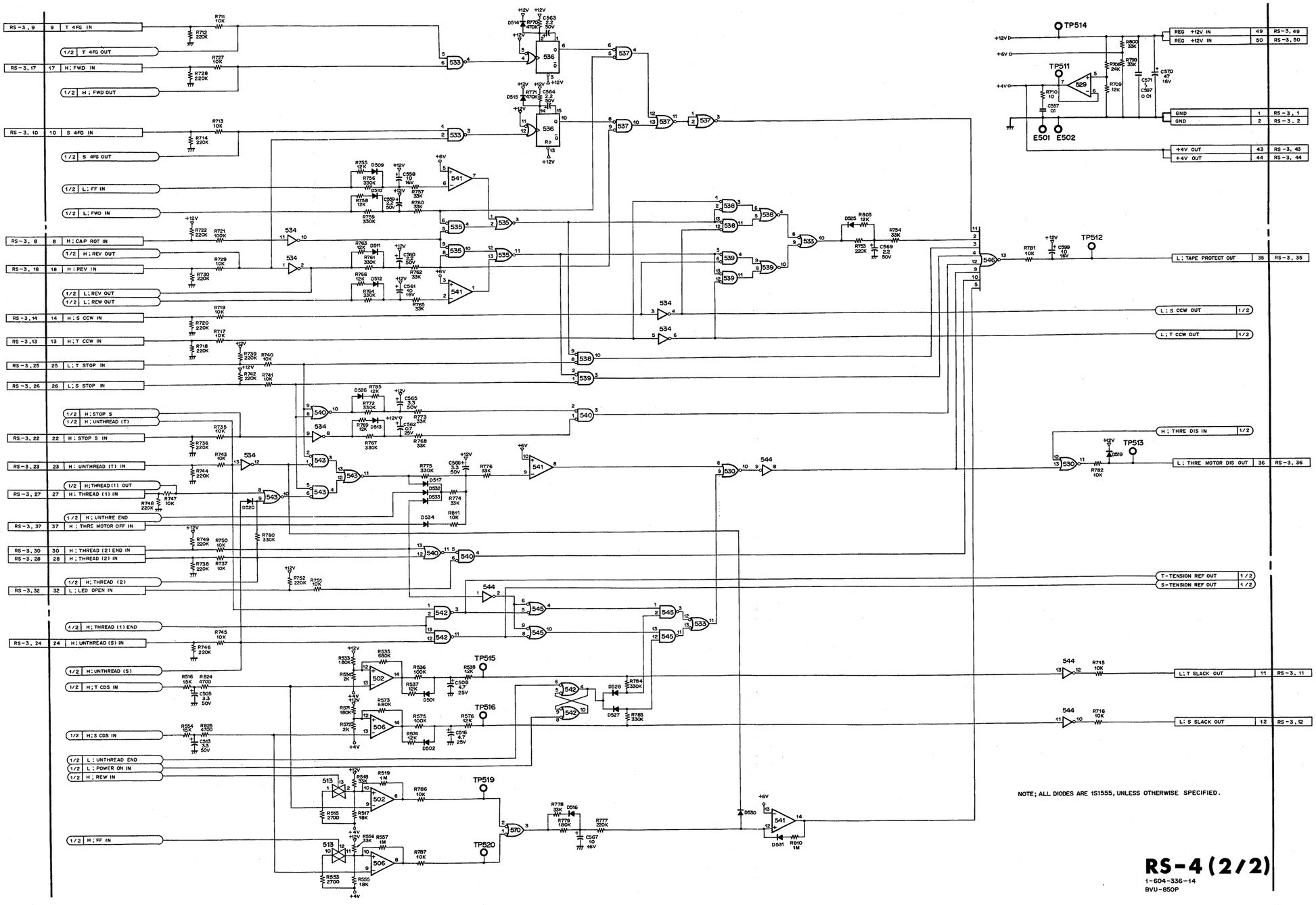

REF.NO.	TYPE	PIN NO. +V(+13.5V)	+V(+12V)	GND	-V(-12V)	-V(-18V)
IC 1	NJM2903D		8	4		
2	NJM2903D		8	4		
3	TC4030BP		14	7		
4	TC4030BP		14	7		
5	TC4013BP		14	7		
6	TC4030BP		14	7		
7	TC4011BP		14	7		
8	NE555N		8	1		
9	NE555N		8	1		
10	MC14538BCP		16	8		
11	μPC324C		4		11	
12	NE555N		8	1		
13	μPC324C		4		11	
14	TC4001BP		14	7		
15	TC4011BP		14	7		
16	TC4066BP		14	7		
17	μPC324C		4		11	
18	TC4066BP		14	7		
19	TC4069UBP		14	7		
20	TC4069UBP		14	7		
21	TC4011BP		14	7		
22	TC4066BP		14	7		
23	M54517P			8		
24	TC4016BP		16	8		
25	TC4099BP		16	8		
26	TC4099BP		16	8		
27	TC4001BP		14	7		
28	TC4069UBP		14	7		
29	TC4001BP		14	7		
30	TC4001BP		14	7		
31	TC4001BP		14	7		
32	TC4011BP		14	7		
33	TC4001BP		14	7		
34	TC4001BP		14	7		
35	TC4069UBP		14	7		
36	TC4011BP		14	7		
37	TC4001BP		14	7		
38	TC4011BP		14	7		
39	TC4001BP		14	7		
40	TC4001BP		14	7		
41	TC5067BP		16	8		
42	M54519P				8	
43	TC5067BP		16	8		
44	M54519P					8
45	μPC324C		4		11	
46	μPC324C		4		11	
47	μPC4558C	8				4
48	TC4001BP		14	7		
49	TC4011BP		14	7		
50	TC4001BP		14	7		—
51	MC14538BCP		16	8		

RS-4(2/2)
1-604-336-14
BVU-850P

PD-14, DR-9(1). (2), PD-15(1). (2), PD-17, PD-21, DR-8 PD·

PD-14; REGULATOR
DR-9(1)·(2); REEL MOTOR DRIVER
PD-15(1)·(2); REG +12V/+5V
PD-17; UNREG
PD-21; REG –12V
DR-8; CAPSTAN MOTOR DRIVER

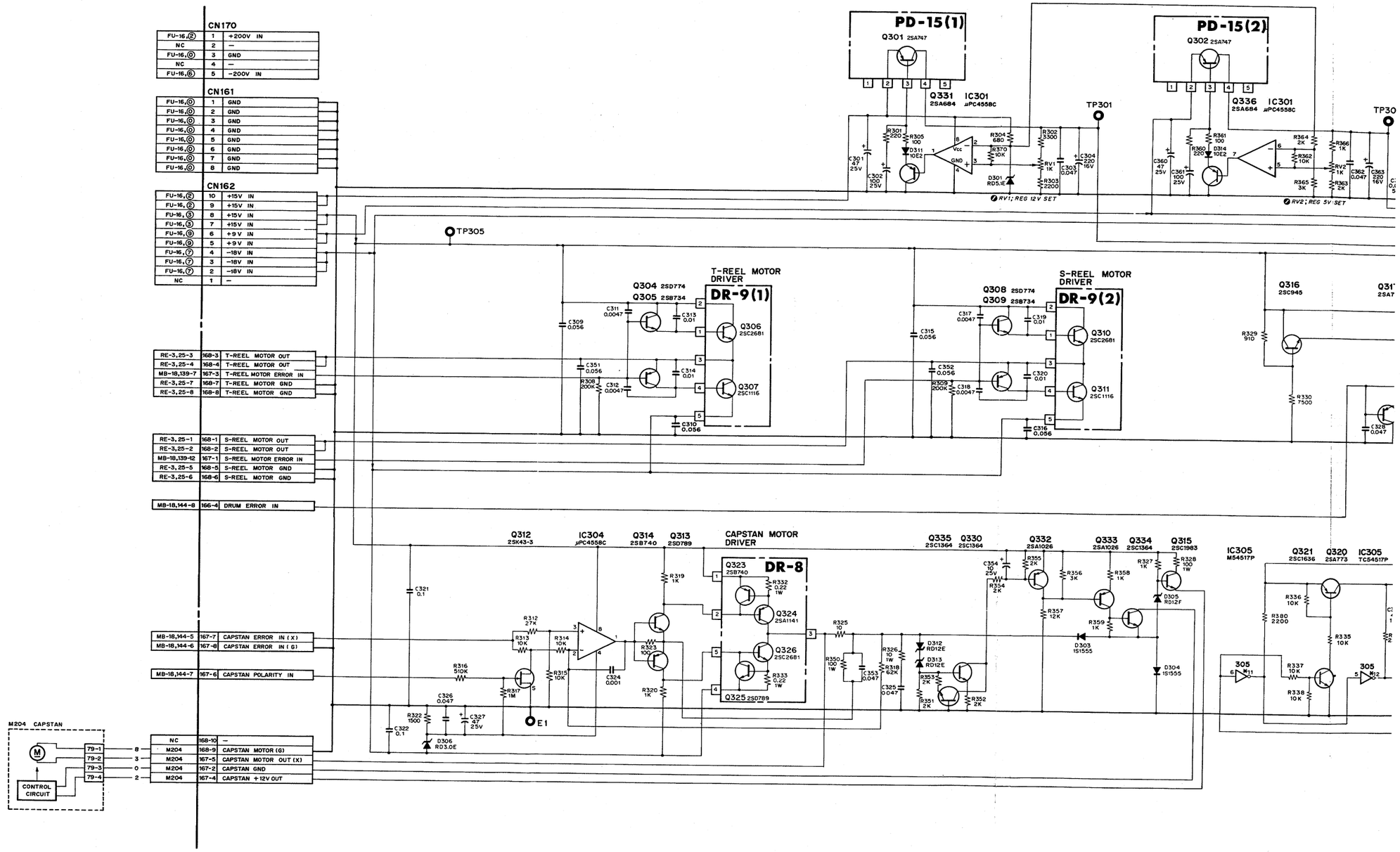

NOTE:

The shaded and ⚠-marked components are critical to safety.
Replace only with same components as specified.

PD-14, DR-9(1).(2), PD-15(1).(2), PD-17, PD-21, DR-8

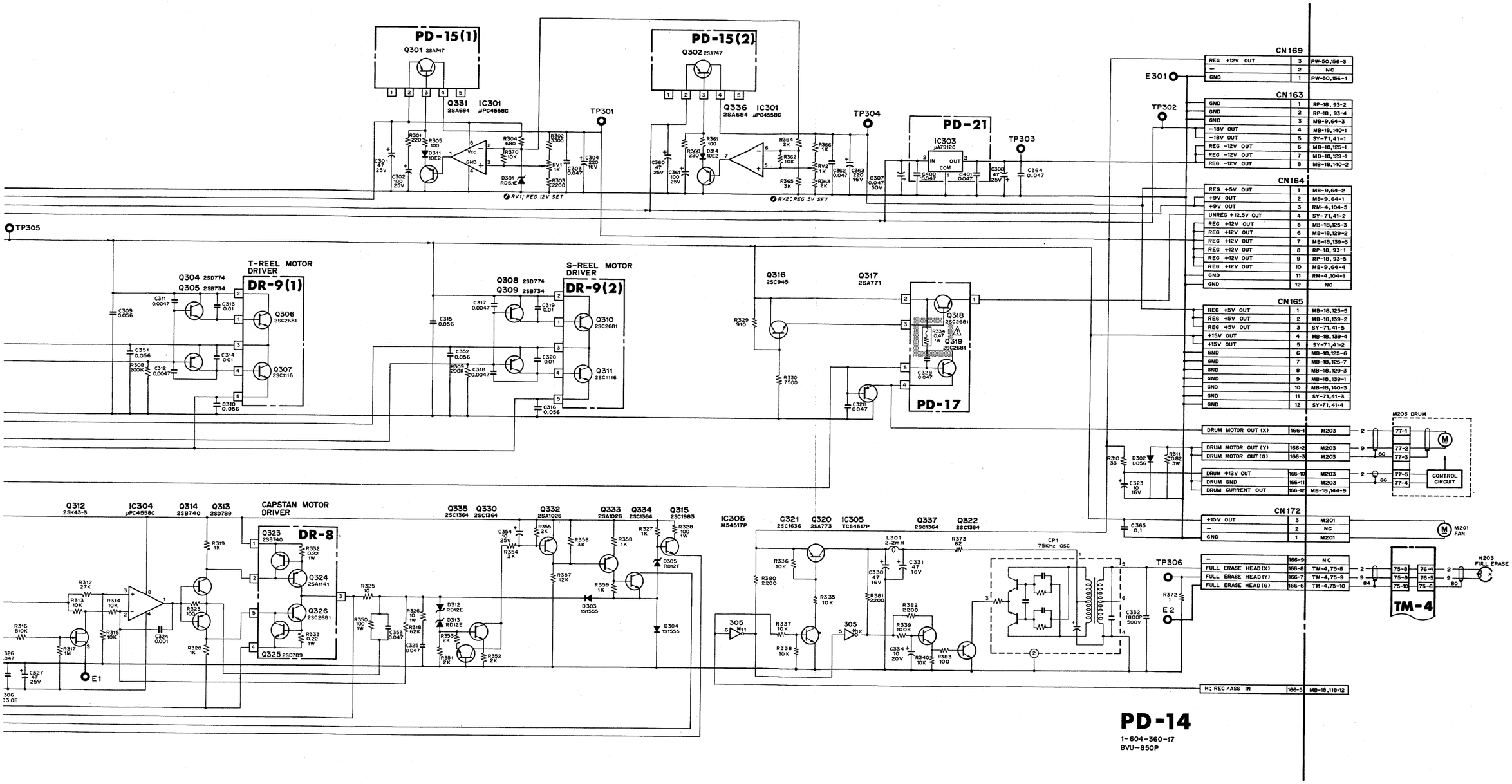

PW-50; AC RECTIFIER
PW-79; SWITCHING REGULATOR
FU-16; FUSE

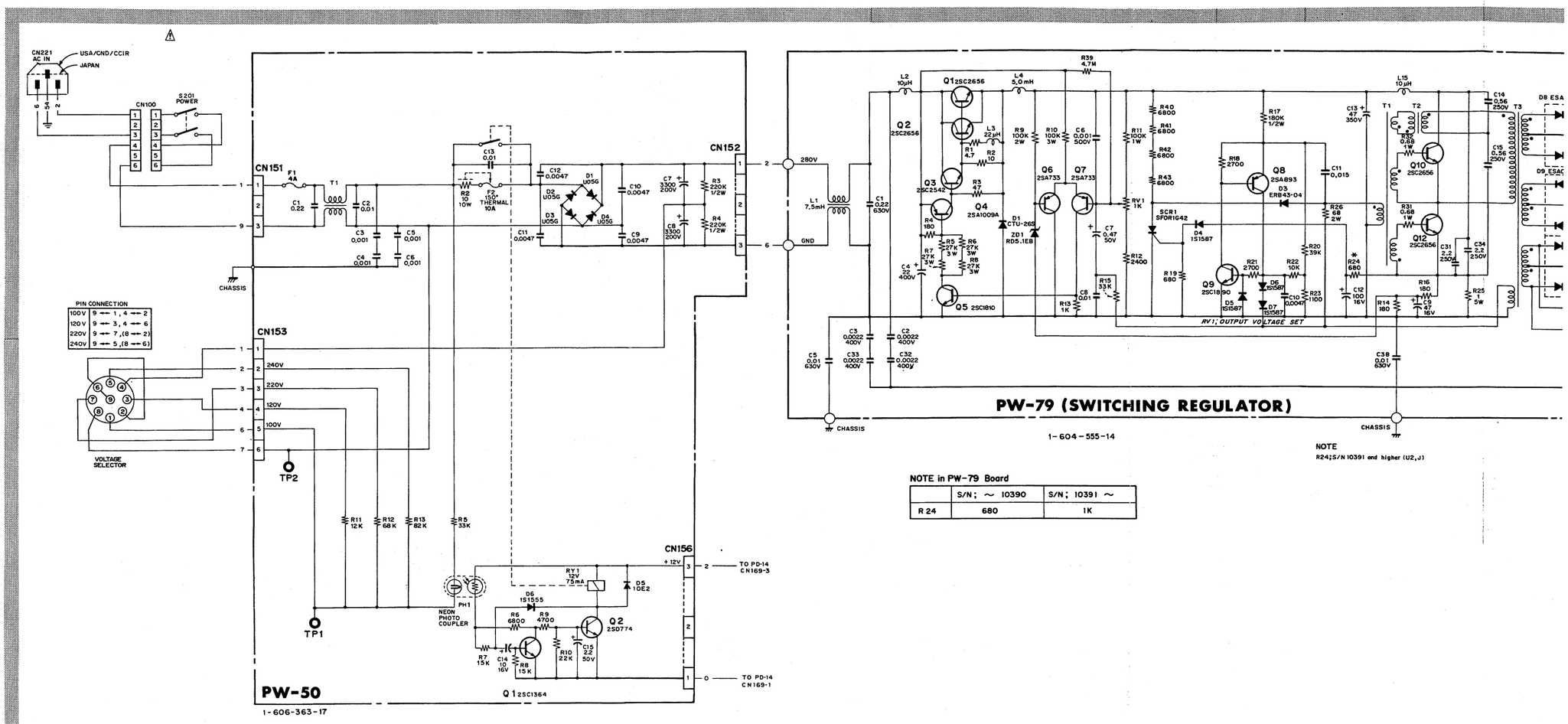

NOTE in PW-79 Board

	S/N; ~ 10390	S/N; 10391 ~
R 24	680	1K

PW-50, PW-79, FU-16

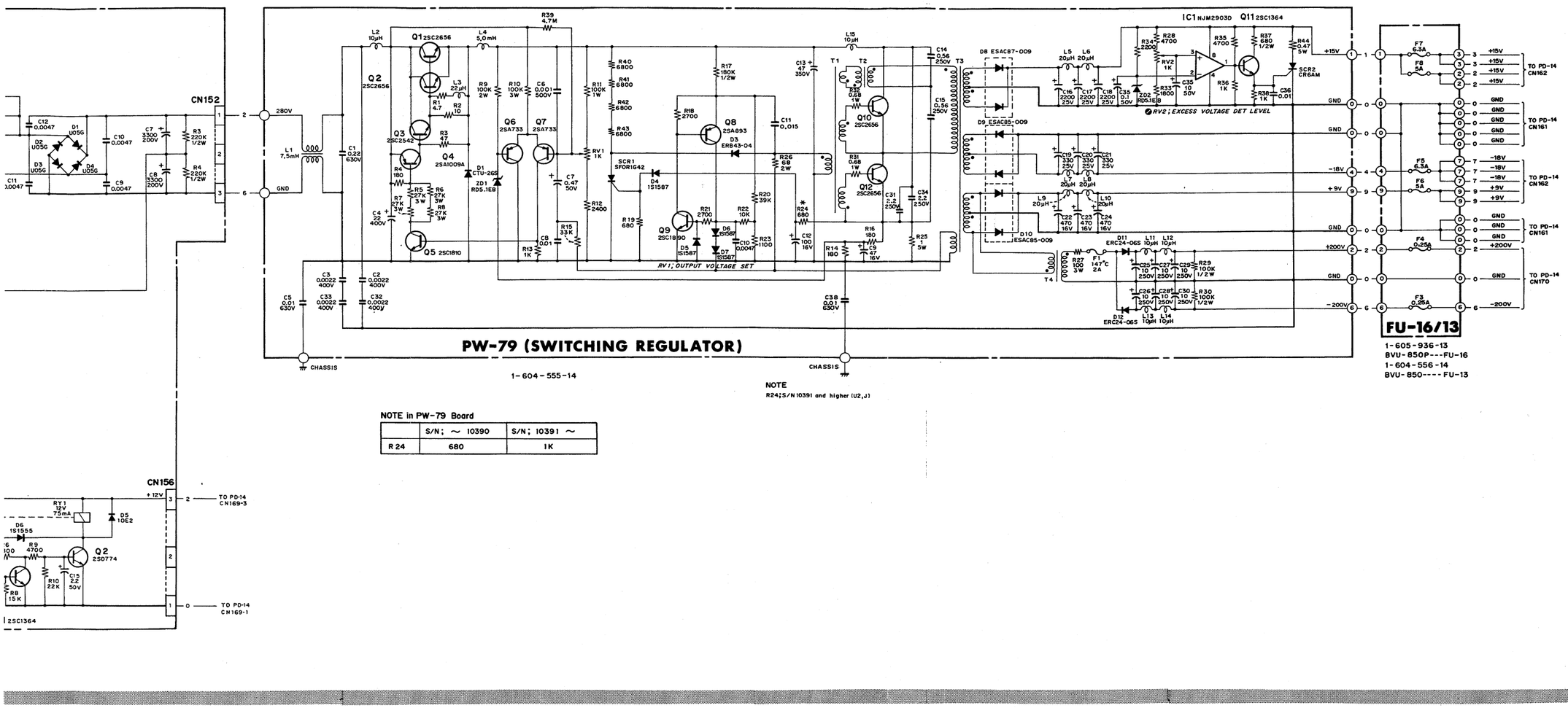

NOTE in PW-79 Board

	S/N; ~ 10390	S/N; 10391 ~
R 24	680	1K

NOTE:

The shaded and ⚠-marked components are critical to safety.
Replace only with same components as specified.

KY-9; FUNCTION KEY
KY-14; TRIM/ENTRY SW
DP-9; DISPLAY
PC-9; DIAL DETECTOR
PC-14; JOG DETECTOR

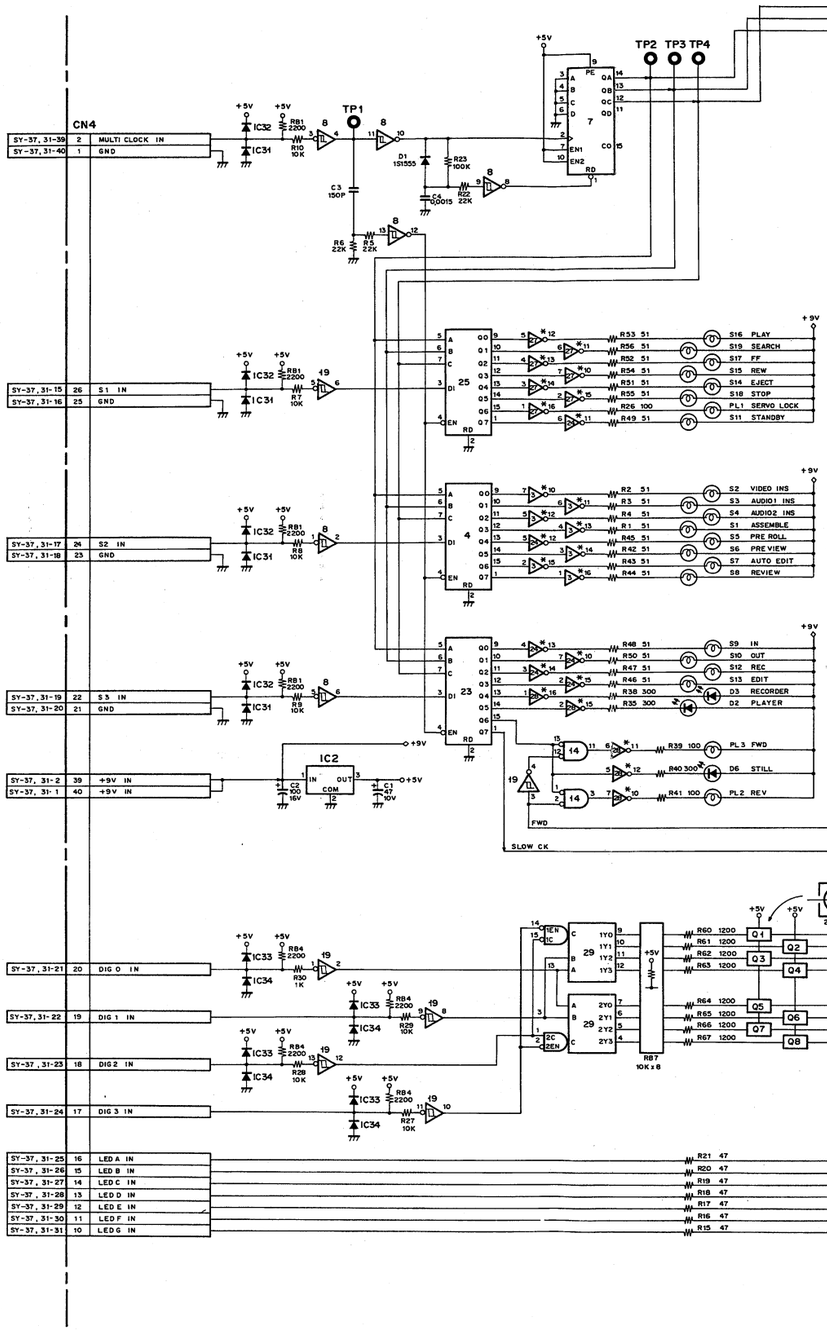

REF. NO	TYPE	PIN NO.	
		V_{DD}/V_{CC}	GND
IC 1	SN74LS05N	14	7
IC 2	μPC7805H	—	2
IC 3	M54517P	—	8
IC 4	TC4099BP	16	8
IC 5	TC4512BP	16	8
IC 6	TC4512BP	16	8
IC 7	TC40161BP	16	8
IC 8	MC14584BCP	14	7
IC 9	TC4512BP	16	8
IC 10	TC4015BP	16	8
IC 11	TC4512BP	16	8
IC 12	TC4516BP	16	8
IC 13	TC4528BP	16	8
IC 14	TC4001BP	14	7
IC 15	TC5040138P	14	7
IC 16	TC5040138P	14	7
IC 17	TC4011BP	14	7
IC 18	TC4011BP	14	7
IC 19	MC14584BCP	14	7
IC 20	TC4030BP	14	7
IC 21	TC4030BP	14	7
IC 22	TC4512BP	16	8
IC 23	TC4099BP	16	8
IC 24	M54517P	—	8
IC 25	TC4099BP	16	8
IC 26	TC4512BP	16	8
IC 27	M54517P	—	8
IC 28	M54517P	—	8
IC 29	SN74LS156N	16	8
IC 30	—	—	—
IC 31	μPA64H	—	—
IC 32	μPA54H	—	—
IC 33	μPA54H	—	—
IC 34	μPA64H	—	—

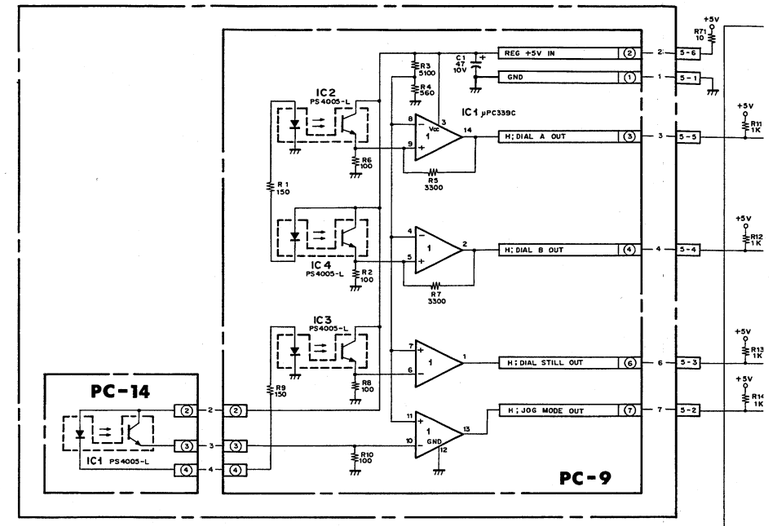

KY-9, KY-14, DP-9, PC-9, PC-14

REF. NO	TYPE	PIN NO. Vbb/Vcc	GND
IC 1	SN74LS05N	14	7
IC 2	μPC7805H	—	2
IC 3	M54517P	—	8
IC 4	TC4099BP	16	8
IC 5	TC4512BP	16	8
IC 6	TC4512BP	16	8
IC 7	TC40H61BP	16	8
IC 8	MC14584BCP	14	7
IC 9	TC4512BP	16	8
IC 10	TC4015BP	16	8
IC 11	TC4512BP	16	8
IC 12	TC4516BP	16	8
IC 13	TC4528BP	16	8
IC 14	TC4001BP	14	7
IC 15	TC5040I3BP	14	7
IC 16	TC5040I3BP	14	7
IC 17	TC40H1BP	14	7
IC 18	TC40H1BP	14	7
IC 19	MC14584BCP	14	7
IC 20	TC4030BP	14	7
IC 21	TC4030BP	14	7
IC 22	TC4512BP	16	8
IC 23	TC4099BP	16	8
IC 24	M54517P	—	8
IC 25	TC4099BP	16	8
IC 26	TC4512BP	16	8
IC 27	M54517P	—	8
IC 28	M54517P	—	8
IC 29	SN74LS156N	16	8
IC 30	—	—	—
IC 31	μPA64H	—	—
IC 32	μPA54H	—	—
IC 33	μPA54H	—	—
IC 34	μPA64H	—	—

TC-13; TIME CODE REC/PB AMPLIFIER
CTL COUNTER
SERVO REF SYNC SELECTOR

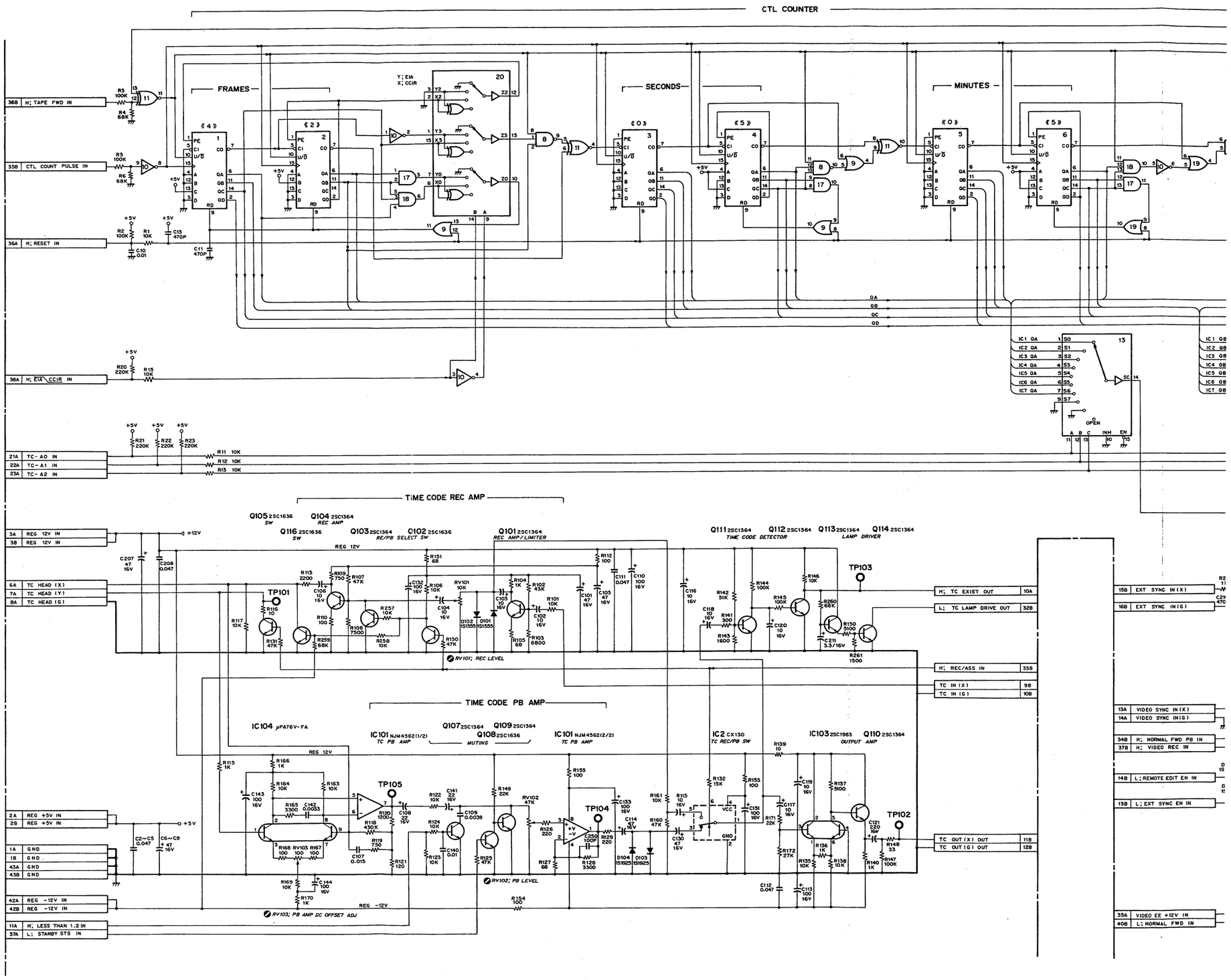

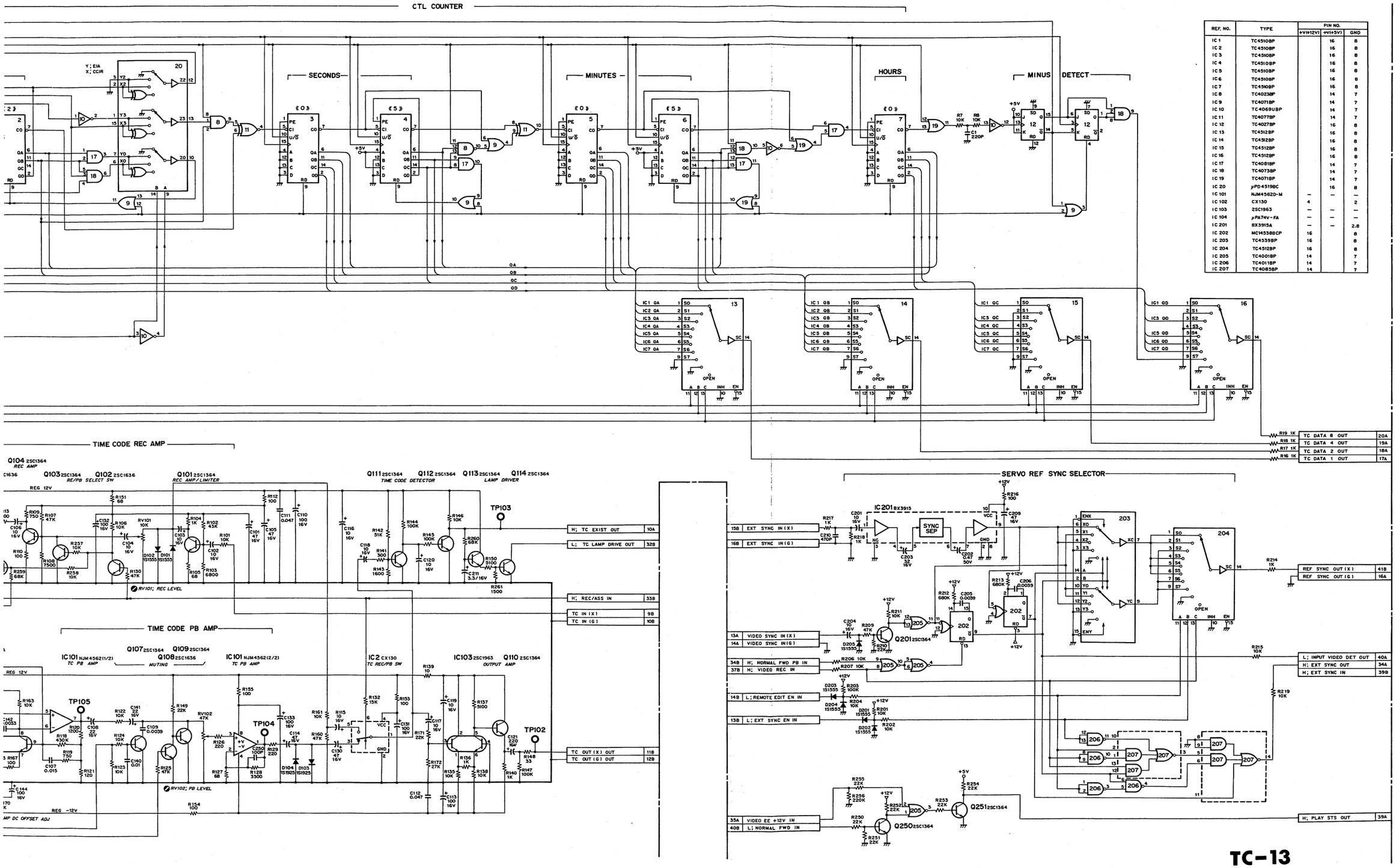

REF. NO.	TYPE	PIN NO. +V(+12V)	PIN NO. +V(+5V)	PIN NO. GND
IC 1	TC4510BP		16	8
IC 2	TC4510BP		16	8
IC 3	TC4510BP		16	8
IC 4	TC4510BP		16	8
IC 5	TC4510BP		16	8
IC 6	TC4510BP		16	8
IC 7	TC4510BP		16	8
IC 8	TC4023BP		14	7
IC 9	TC4071BP		14	7
IC 10	TC4069UBP		14	7
IC 11	TC4077BP		14	7
IC 12	TC4027BP		16	8
IC 13	TC4512BP		16	8
IC 14	TC4512BP		16	8
IC 15	TC4512BP		16	8
IC 16	TC4512BP		16	8
IC 17	TC4081BP		14	7
IC 18	TC4073BP		14	7
IC 19	TC4071BP		14	7
IC 20	μPD4519BC		16	8
IC 101	NJM4562D-M	–	–	–
IC 102	CX130	4		2
IC 103	2SC1963	–	–	–
IC 104	μPA74V-FA	–	–	–
IC 201	BX3915A	–	–	2.8
IC 202	MC14538BCP	16		8
IC 203	TC4539BP	16		8
IC 204	TC4512BP	16		8
IC 205	TC4001BP	14		7
IC 206	TC4011BP	14		7
IC 207	TC4085BP	14		7

TC-13
1-604-341-16
BVU-850P

SY-36(1/2) SY-

SY-36(1/2); FUNCTION SYSTEM CONTROL

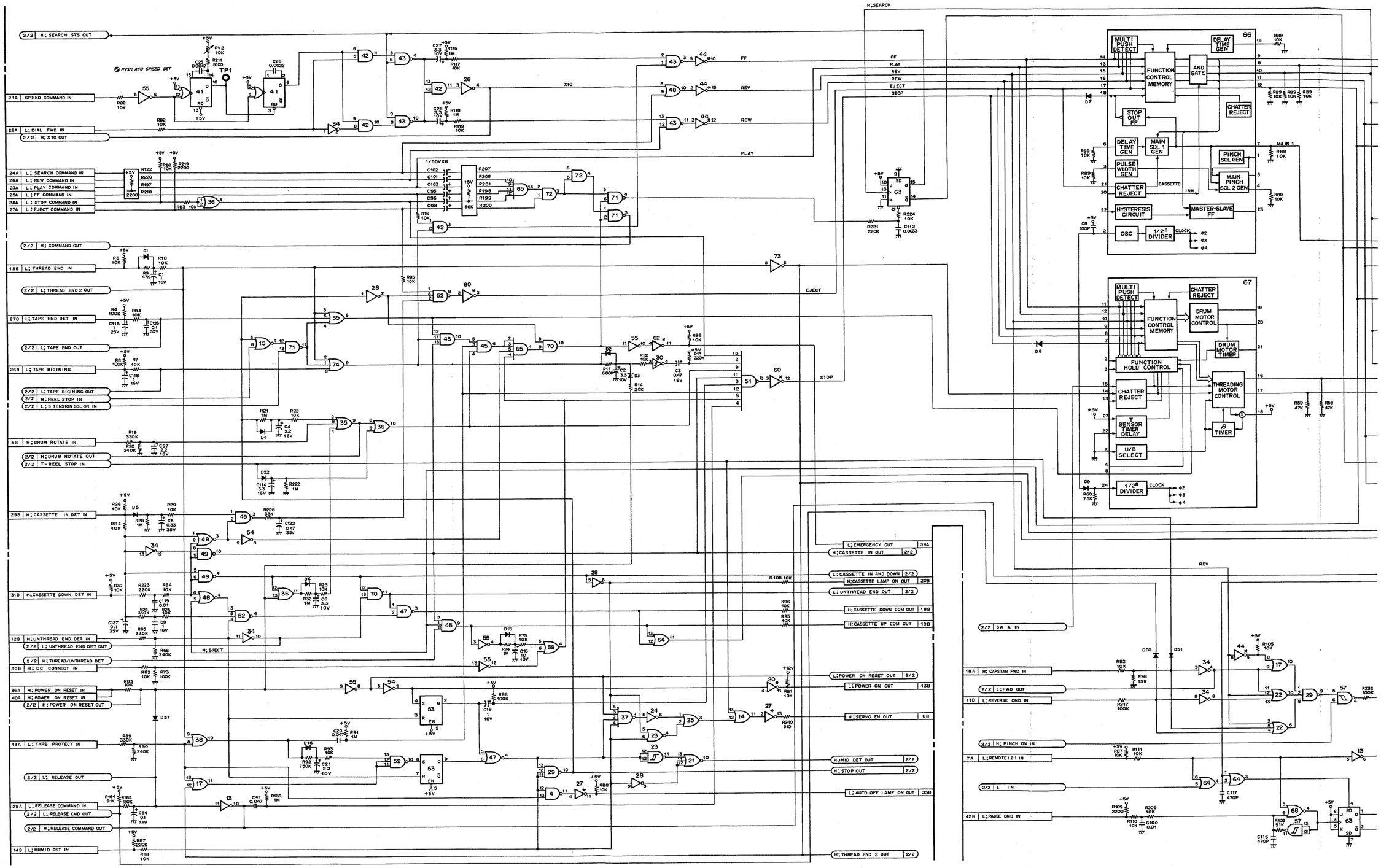

17-140

17-141

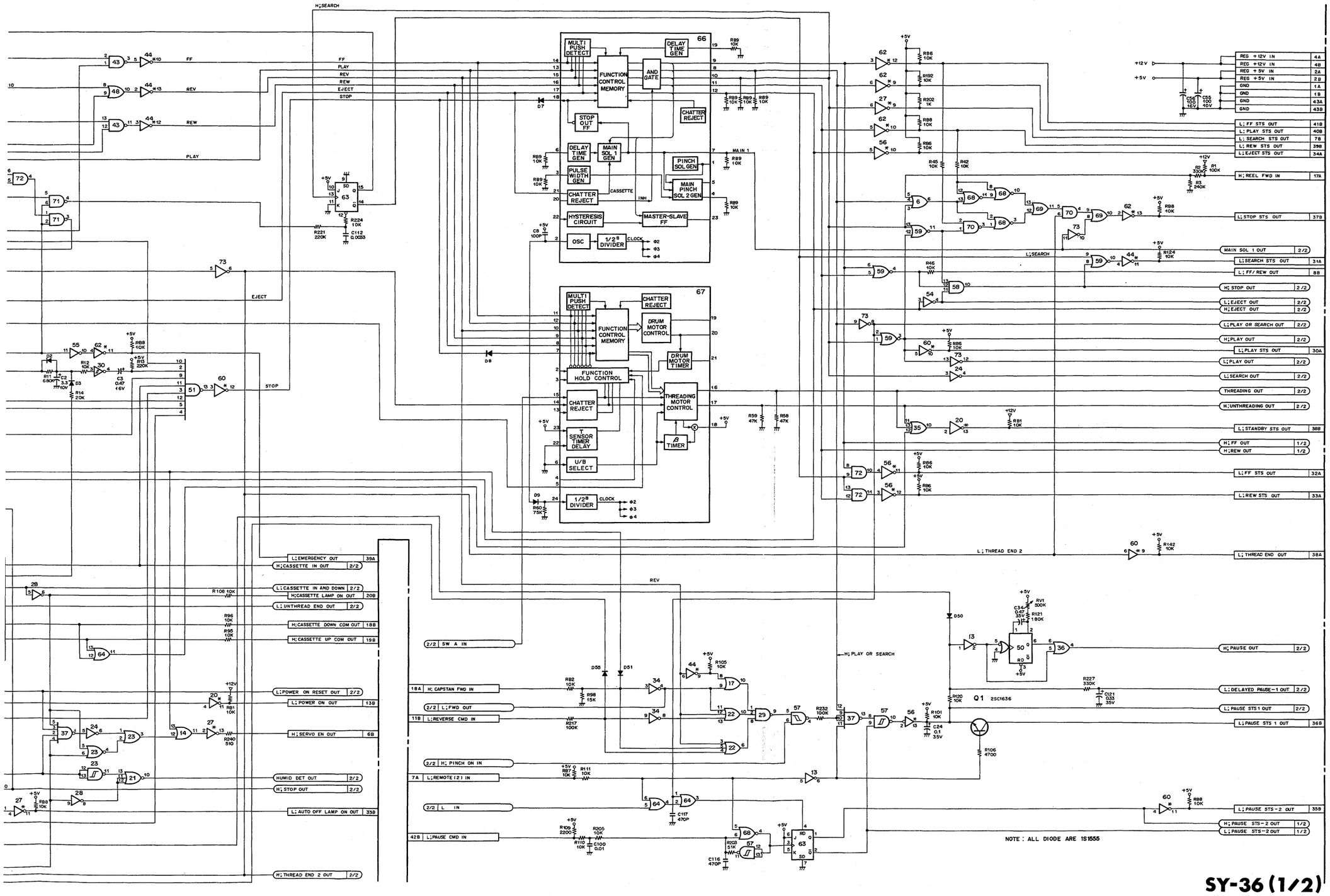

REF. NO.	TYPE	PIN NO. +V (5V)	PIN NO. GND
IC1	TC40161BP	16	8
IC2	TC4512BP	16	8
IC3	TC4081BP	14	7
IC4	TC4011BP	14	7
IC5	TC4073BP	14	7
IC6	TC4075BP	14	7
IC7	TC4081BP	14	7
IC8	TC4512BP	16	8
IC9	TC4081BP	14	7
IC10	TC4069UBP	14	7
IC11	TC4069UBP	14	7
IC12	TC4082BP	14	7
IC13	TC4069UBP	14	7
IC14	TC4071BP	14	7
IC15	TC4001BP	14	7
IC16	TC4043BP	16	8
IC17	TC4071BP	14	7
IC18	TC4071BP	14	7
IC19	TC4073BP	14	7
IC20	M54529AP	14	7
IC21	TC4025BP	14	7
IC22	TC4075BP	14	7
IC23	TC4001BP	14	7
IC24	TC4069UBP	14	7
IC25	TC4025BP	14	7
IC26	TC4043BP	16	8
IC27	M54529AP	14	7
IC28	TC4069UBP	14	7
IC29	TC4023BP	14	7
IC30	MC14584BCP	14	7
IC31	TC4081BP	14	7
IC32	TC4011BP	14	7
IC33	TC4001BP	14	7
IC34	TC4069UBP	14	7
IC35	TC4075BP	14	7
IC36	TC4071BP	14	7
IC37	TC4012BP	14	7
IC38	TC4071BP	14	7
IC39	TC4072BP	14	7
IC40	TC4073BP	14	7
IC41	TC4528BP	16	8
IC42	TC4081BP	14	7
IC43	TC4011BP	14	7
IC44	M54529AP	14	7
IC45	TC4073BP	14	7
IC46	TC4071BP	14	7
IC47	TC4001BP	14	7
IC48	TC4001BP	14	7
IC49	TC4011BP	14	7
IC50	HD14538BP	16	8
IC51	TC4068BP	14	7
IC52	TC4023BP	14	7
IC53	TC4043BP	16	8
IC54	TC4069UBP	14	7
IC55	TC4069UBP	14	7
IC56	M54529AP	14	7
IC57	TC4093BP	14	7
IC58	TC4073BP	14	7
IC59	TC4001BP	14	7
IC60	M54529AP	14	7
IC61	MC14584BCP	14	7
IC62	M54529AP	14	7
IC63	TC4027BP	16	8
IC64	TC4071BP	14	7
IC65	TC4082BP	14	7
IC66	CX756A	F	24
IC67	CX757	F	1
IC68	TC4001BP	14	7
IC69	TC4071BP	14	7
IC70	TC4081BP	14	7
IC71	TC4011BP	14	7
IC72	TC4081BP	14	7
IC73	TC4069UBP	14	7
IC74	TC4075BP	14	7

SY-36 (1/2)
1-604-342-17
BVU-850P

SY-36(2/2); FUNCTION SYSTEM CONTROL

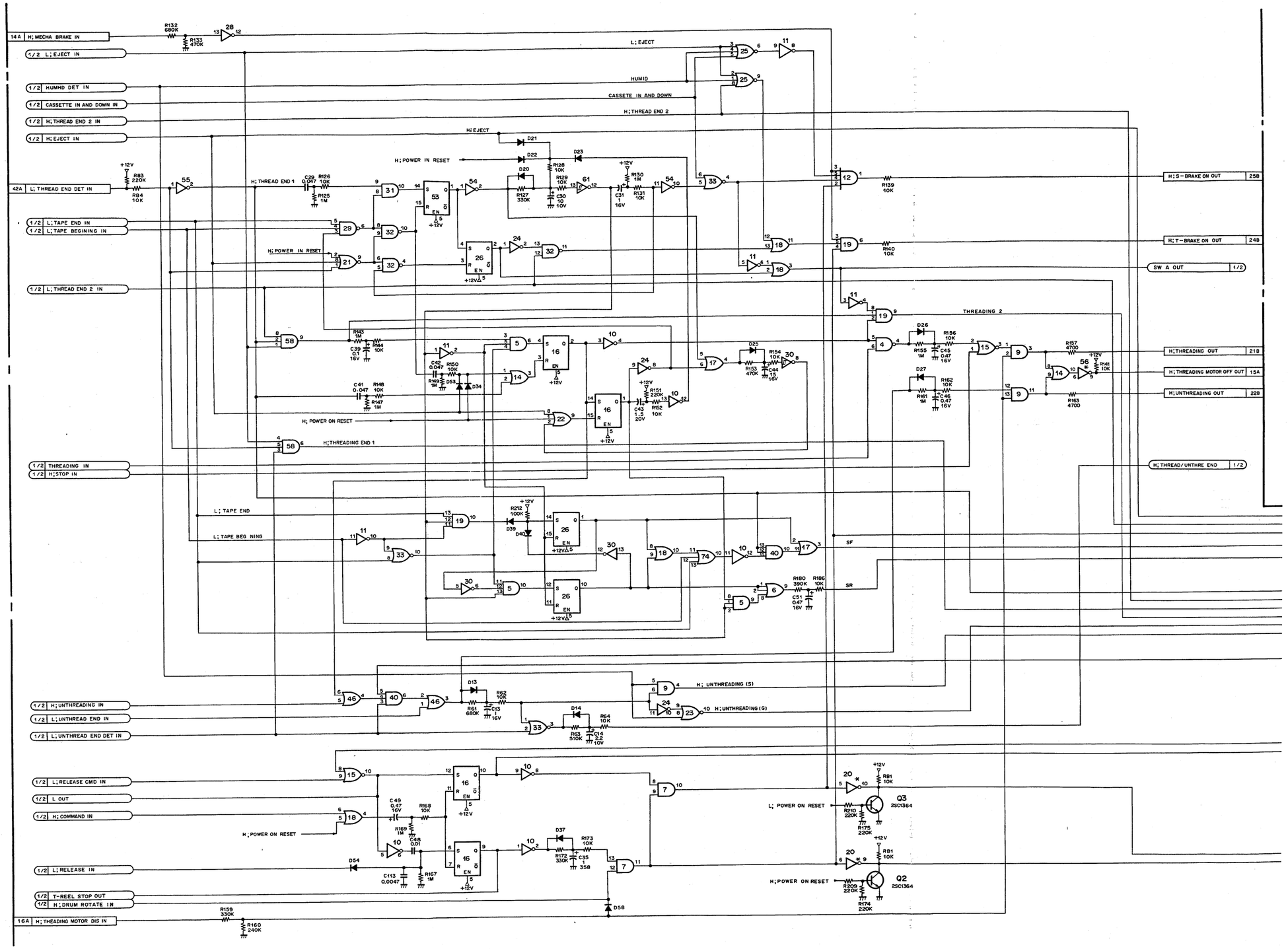

17-147 17-148

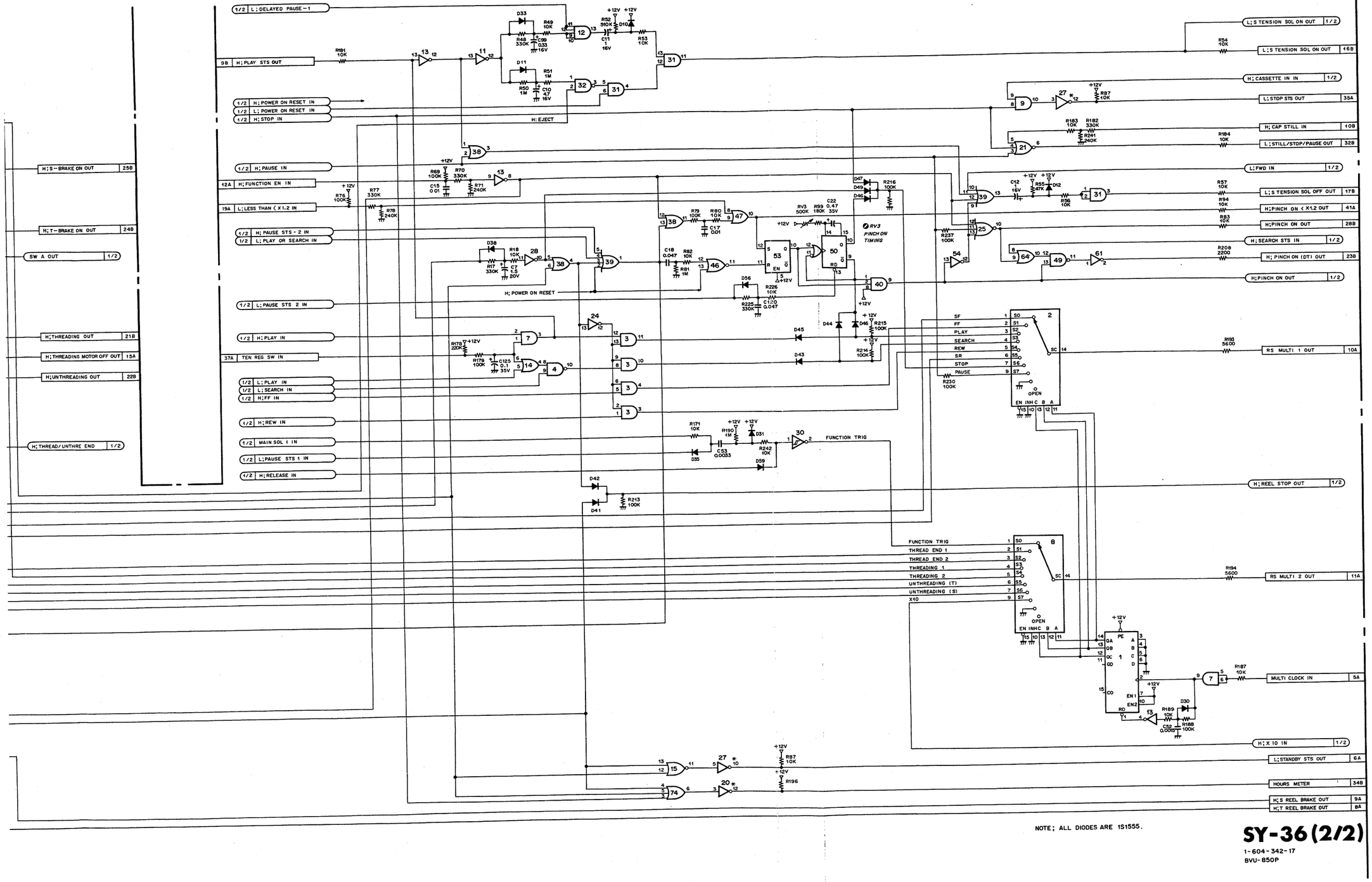

REF. NO.	TYPE	PIN NO. +V (5V)	PIN NO. GND
IC1	TC40161BP	16	8
IC2	TC4512BP	16	8
IC3	TC4081BP	14	7
IC4	TC4011BP	14	7
IC5	TC4073BP	14	7
IC6	TC4075BP	14	7
IC7	TC4081BP	14	7
IC8	TC4512BP	16	8
IC9	TC4081BP	14	7
IC10	TC4069UBP	14	7
IC11	TC4069UBP	14	7
IC12	TC4082BP	14	7
IC13	TC4069UBP	14	7
IC14	TC4071BP	14	7
IC15	TC4001BP	14	7
IC16	TC4043BP	16	8
IC17	TC4071BP	14	7
IC18	TC4071BP	14	7
IC19	TC4073BP	14	7
IC20	M54529AP	14	7
IC21	TC4025BP	14	7
IC22	TC4075BP	14	7
IC23	TC4001BP	14	7
IC24	TC4069UBP	14	7
IC25	TC4025BP	14	7
IC26	TC4043BP	16	8
IC27	M54529AP	14	7
IC28	TC4069UBP	14	7
IC29	TC4023BP	14	7
IC30	MC14584BCP	14	7
IC31	TC4081BP	14	7
IC32	TC4011BP	14	7
IC33	TC4001BP	14	7
IC34	TC4069UBP	14	7
IC35	TC4075BP	14	7
IC36	TC4071BP	14	7
IC37	TC4012BP	14	7
IC38	TC4071BP	14	7
IC39	TC4073BP	14	7
IC40	TC4073BP	14	7
IC41	TC4528BP	16	8
IC42	TC4081BP	14	7
IC43	TC4011BP	14	7
IC44	M54529AP	14	7
IC45	TC4073BP	14	7
IC46	TC4071BP	14	7
IC47	TC4001BP	14	7
IC48	TC4001BP	14	7
IC49	TC4011BP	14	7
IC50	HD14538BP	16	8
IC51	TC4068BP	14	7
IC52	TC4023BP	14	7
IC53	TC4043BP	16	8
IC54	TC4069UBP	14	7
IC55	TC4069UBP	14	7
IC56	M54529AP	14	7
IC57	TC4093BP	14	7
IC58	TC4073BP	14	7
IC59	TC4001BP	14	7
IC60	M54529AP	14	7
IC61	MC14584BCP	14	7
IC62	M54529AP	14	7
IC63	TC4027BP	16	8
IC64	TC4071BP	14	7
IC65	TC4082BP	14	7
IC66	CX756A	F	24
IC67	CX757	F	1
IC68	TC4001BP	14	7
IC69	TC4071BP	14	7
IC70	TC4081BP	14	7
IC71	TC4011BP	14	7
IC72	TC4081BP	14	7
IC73	TC4069UBP	14	7
IC74	TC4075BP	14	7

SY-37A(1/2) SY-3

SY-37A(1/2); MICRO PROCESSOR

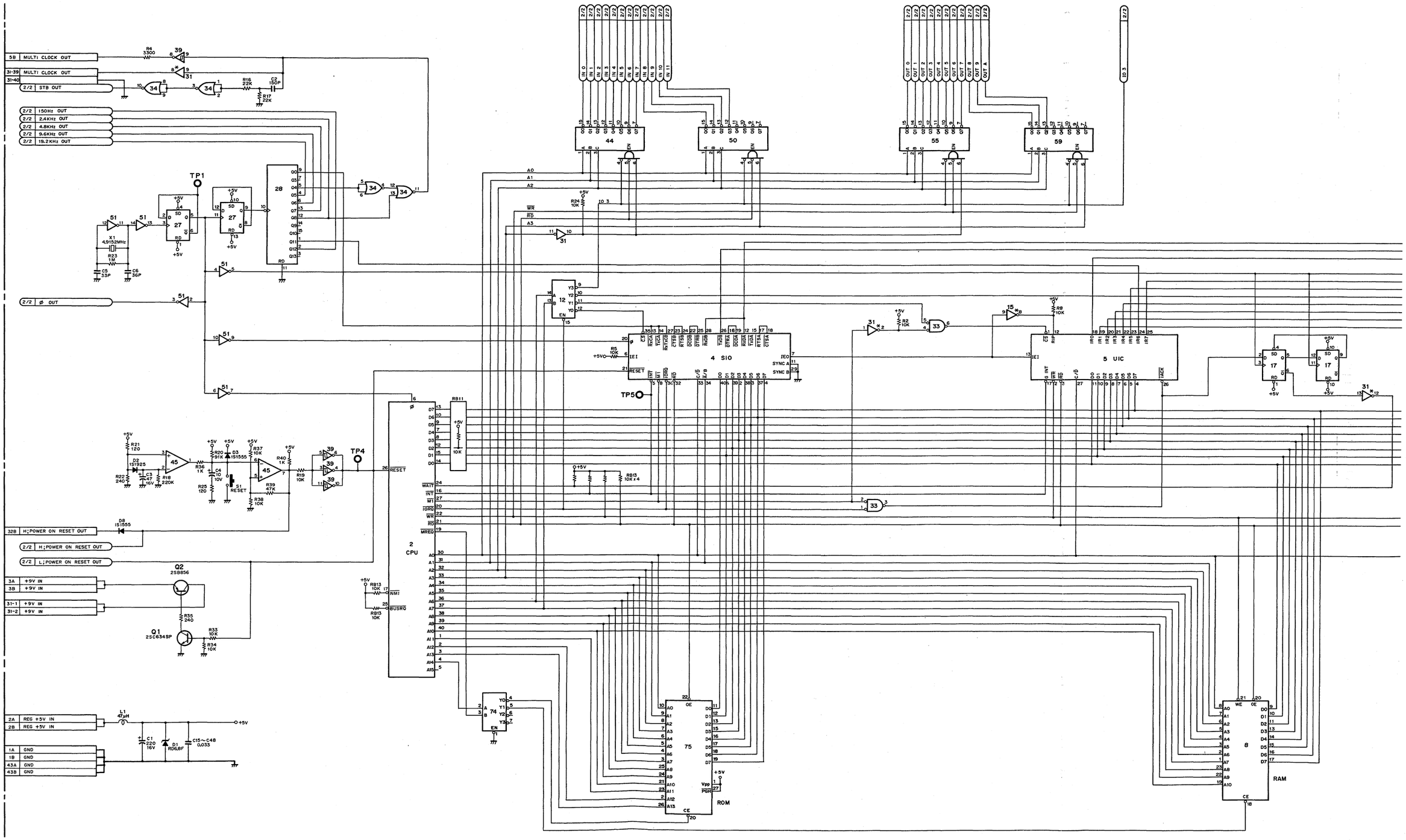

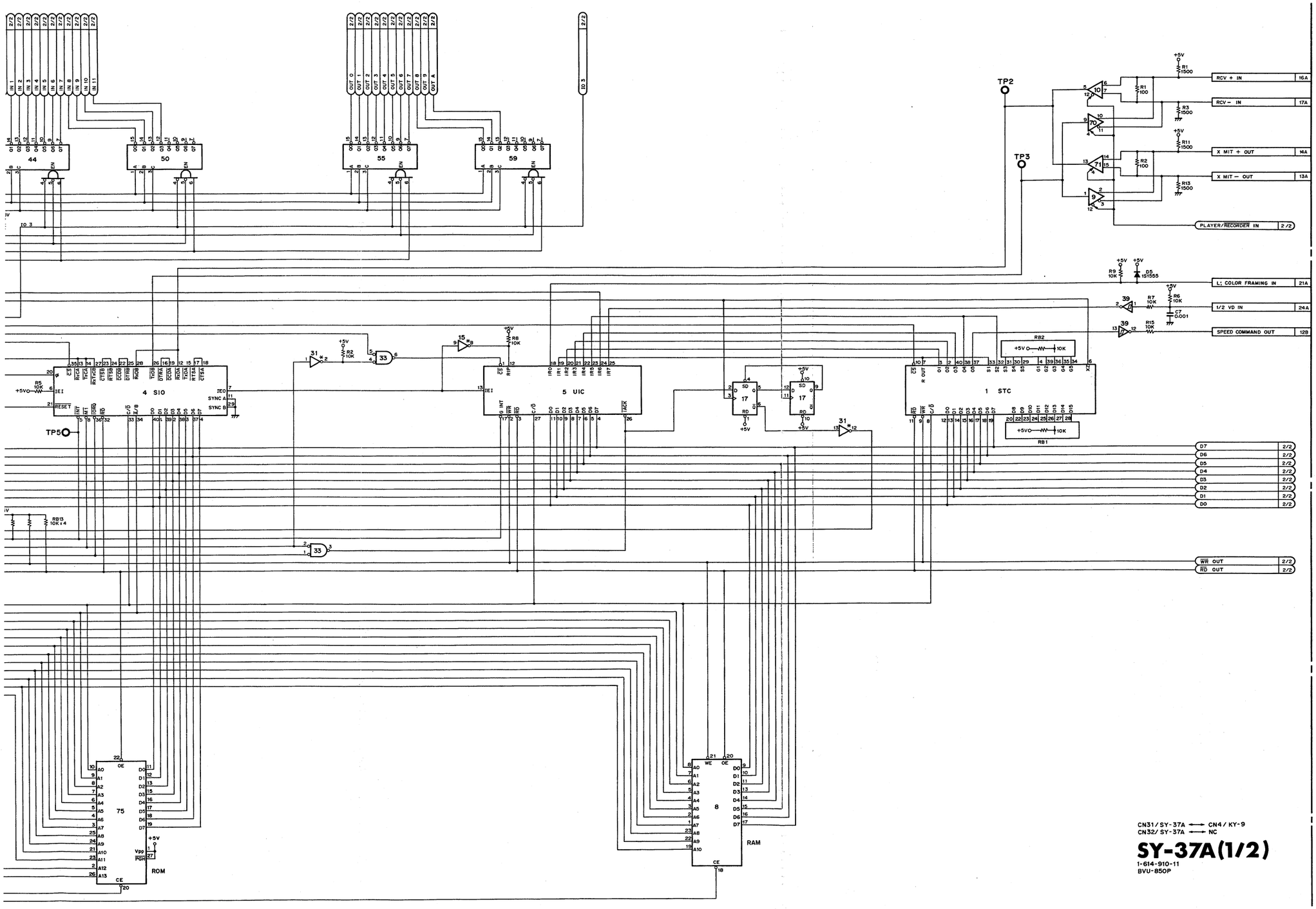

REF NO.	TYPE	PIN NO. +V (5V)	PIN NO. GND
IC 1	AM9513DC	1	21
IC 2	LH0080	11	29
IC 3	—	24	12
IC 4	LH0084	9	31
IC 5	AM9519APC	28	14
IC 6	—	24	12
IC 7	—	24	12
IC 8	MSM2128-15RS	24	12
IC 9	AM26LS31PC	16	8
IC10	AM26LS32PC	16	8
IC11	SN74LS244N	20	10
IC12	SN74LS139N	16	8
IC13	—		
IC14	MC14598BCP	18	9
IC15	SN7407N	14	7
IC16	SN74LS244N	20	10
IC17	SN74LS74AN	14	7
IC18	SN74LS244N	20	10
IC19	MC14598BCP	18	9
IC20	SN74LS378N	16	8
IC21	SN74LS377N	20	10
IC22	LB1261	9	8
IC23	LB1261	9	8
IC24	MC14598BCP	18	9
IC25	SN74LS05N	14	7
IC26	SN74LS377N	20	10
IC27	TC40H074P	14	7
IC28	TC4020BP	16	8
IC29	SN74LS244N	20	10
IC30	MC14598BCP	18	9
IC31	SN74LS05N	14	7
IC32	SN74LS377N	20	10
IC33	SN74LS32N	14	7
IC34	TC4001BP	14	7
IC35	M74LS244P	20	10
IC36	MC14598BCP	18	9
IC37	TC4512BP	16	8
IC38	SN74LS377N	20	10
IC39	MC14584BCP	14	7
IC40	SN74LS244N	20	10
IC41	MC14598BCP	18	9
IC42	TC4512BP	16	8
IC43	SN74LS377N	20	10
IC44	SN74LS138N	16	8
IC45	NJM29030	8	4
IC46	SN74LS244N	20	10
IC47	—		
IC48	TC4512BP	16	8
IC49	SN74LS377N	20	10
IC50	SN74LS138N	16	8
IC51	TC40H368P	16	8
IC52	SN74LS244N	20	10
IC53	TC4512BP	16	8
IC54	SN74LS377N	20	10
IC55	SN74LS138N	16	8
IC56	SN74LS377N	20	10
IC57	TC4512BP	16	8
IC58	SN74LS377N	20	10
IC59	SN74LS138N	16	8
IC60	—	16	8
IC61	μPA54H	—	—
IC62	μPA64H	—	—
IC63	μPA54H	—	—
IC64	μPA64H	—	—
IC65	SN74LS158N	16	8
IC66	SN74LS158N	16	8
IC70	AM26LS31PC	1	5, 8
IC71	AM26LS32PC	16	8
IC72	—	24	12
IC73	SN74HC74N	14	7
IC74	SN74LS139N	16	8
IC75	HN4827128-U850-V1	28	14

CN31/SY-37A ⟷ CN4/KY-9
CN32/SY-37A ⟷ NC

SY-37A(1/2)
1-614-910-11
BVU-850P

SY-37A(2/2) SY-

SY-37A(2/2); MICRO PROCESSOR

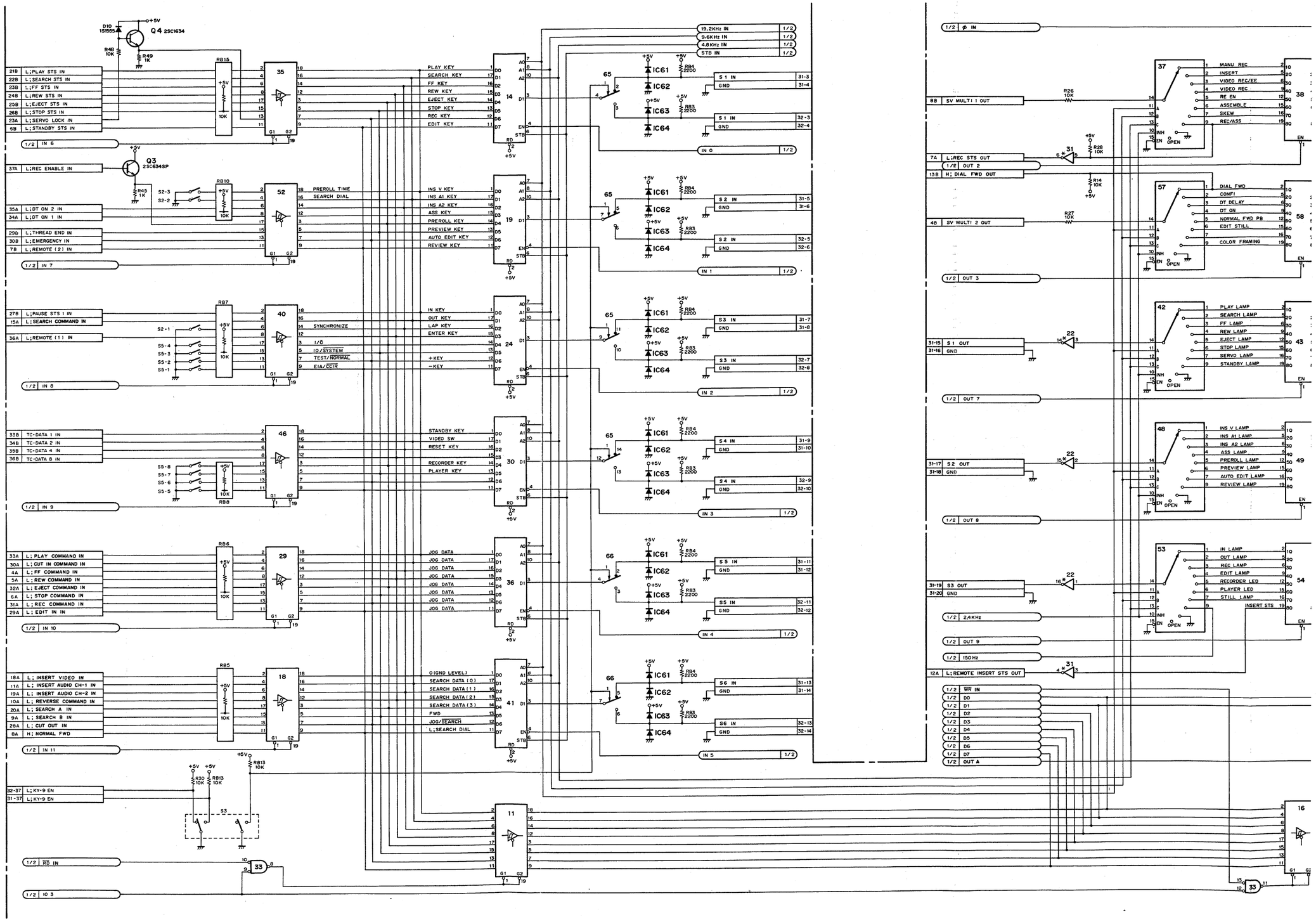

17-160

17-161

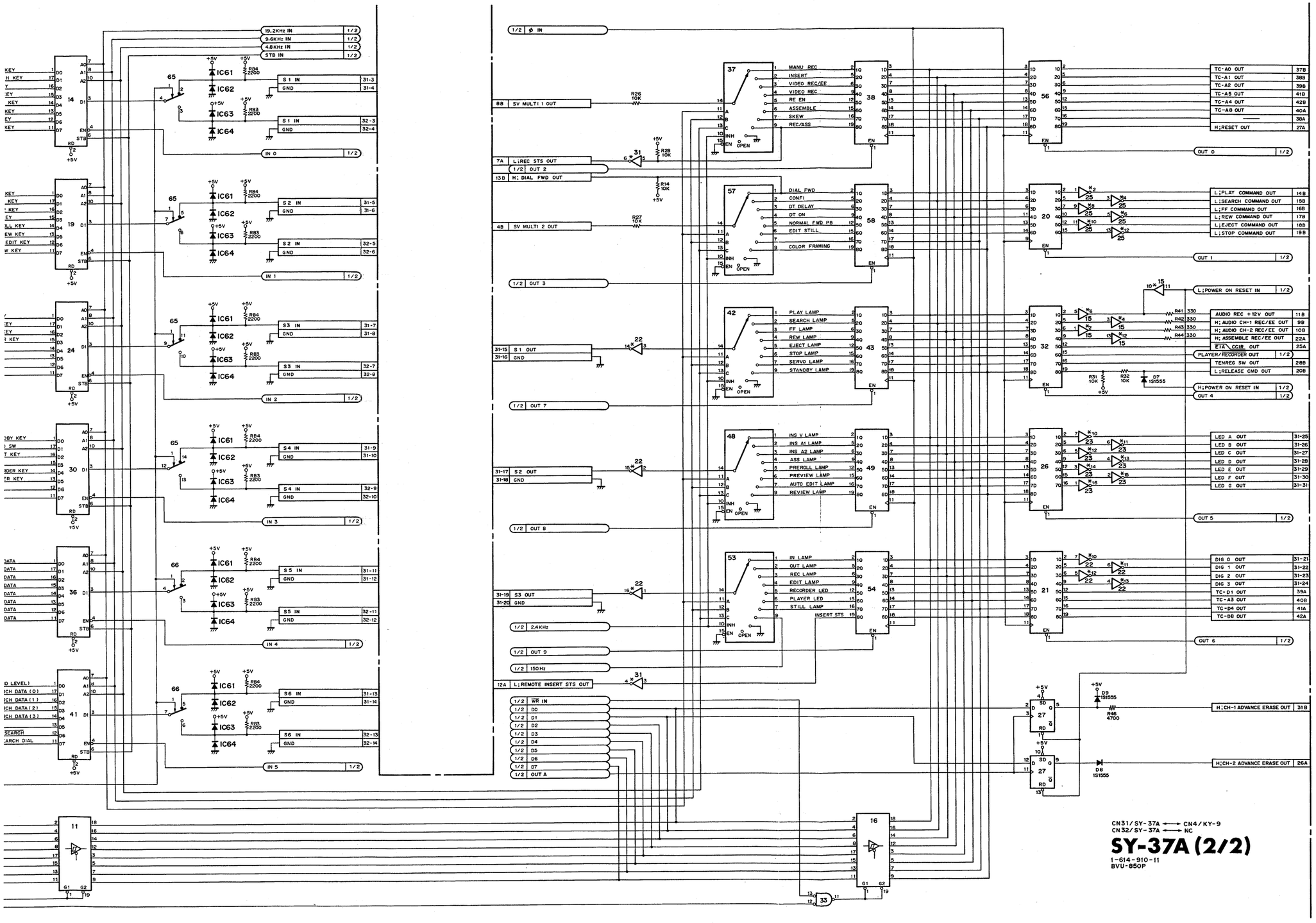

REF NO.	TYPE	PIN NO. +V (5V)	PIN NO. GND
IC 1	AM9513DC	1	21
IC 2	L H0080	11	29
IC 3	—	24	12
IC 4	LH0084	9	31
IC 5	AM9519APC	28	14
IC 6	—	24	12
IC 7	—	24	12
IC 8	MSM2128-15RS	24	12
IC 9	AM26LS31PC	16	8
IC10	AM26LS32PC	16	8
IC11	SN74LS244N	20	10
IC12	SN74LS139N	16	8
IC13	—	—	—
IC14	MC14598BCP	18	9
IC15	SN7407N	14	7
IC16	SN74LS244N	20	10
IC17	SN74LS74AN	14	7
IC18	SN74LS244N	20	10
IC19	MC14598BCP	18	9
IC20	SN74LS378N	16	8
IC21	SN74LS377N	20	10
IC22	LB1261	9	8
IC23	LB1261	9	8
IC24	MC14598BCP	18	9
IC25	SN74LS05N	14	7
IC26	SN74LS377N	20	10
IC27	TC40H074P	14	7
IC28	TC4020BP	16	8
IC29	SN74LS244N	20	10
IC30	MC14598BCP	18	9
IC31	SN74LS05N	14	7
IC32	SN74LS377N	20	10
IC33	SN74LS32N	14	7
IC34	TC4001BP	14	7
IC35	M74LS244P	20	10
IC36	MC14598BCP	18	9
IC37	TC4512BP	16	8
IC38	SN74LS377N	20	10
IC39	MC14584BCP	14	7
IC40	SN74LS244N	20	10
IC41	MC14598BCP	18	9
IC42	TC4512BP	16	8
IC43	SN74LS377N	20	10
IC44	SN74LS138N	16	8
IC45	NJM2903D	8	4
IC46	SN74LS244N	20	10
IC47			
IC48	TC4512BP	16	8
IC49	SN74LS377N	20	10
IC50	SN74LS138N	16	8
IC51	TC40H368P	16	8
IC52	SN74LS244N	20	10
IC53	TC4512BP	16	8
IC54	SN74LS377N	20	10
IC55	SN74LS138N	16	8
IC56	SN74LS377N	20	10
IC57	TC4512BP	16	8
IC58	SN74LS377N	20	10
IC59	SN74LS138N	16	8
IC60	—	16	8
IC61	μPA54H	—	—
IC62	μPA64H	—	—
IC63	μPA54H	—	—
IC64	μPA64H	—	—
IC65	SN74LS158N	16	8
IC66	SN74LS158N	16	8
IC70	AM26LS31PC	1	5, 8
IC71	AM26LS32PC	16	8
IC72	—	24	12
IC73	SN74HC74N	14	7
IC74	SN74LS139N	16	8
IC75	HN482712-U850-V1	28	14

SY-71; MOTOR/SOLENOID DRIVER
EK-2(B); THREAD END DETECTOR
TM-8; THREAD MOTOR

SY-71, EK-2(B), TM-8 SY-7

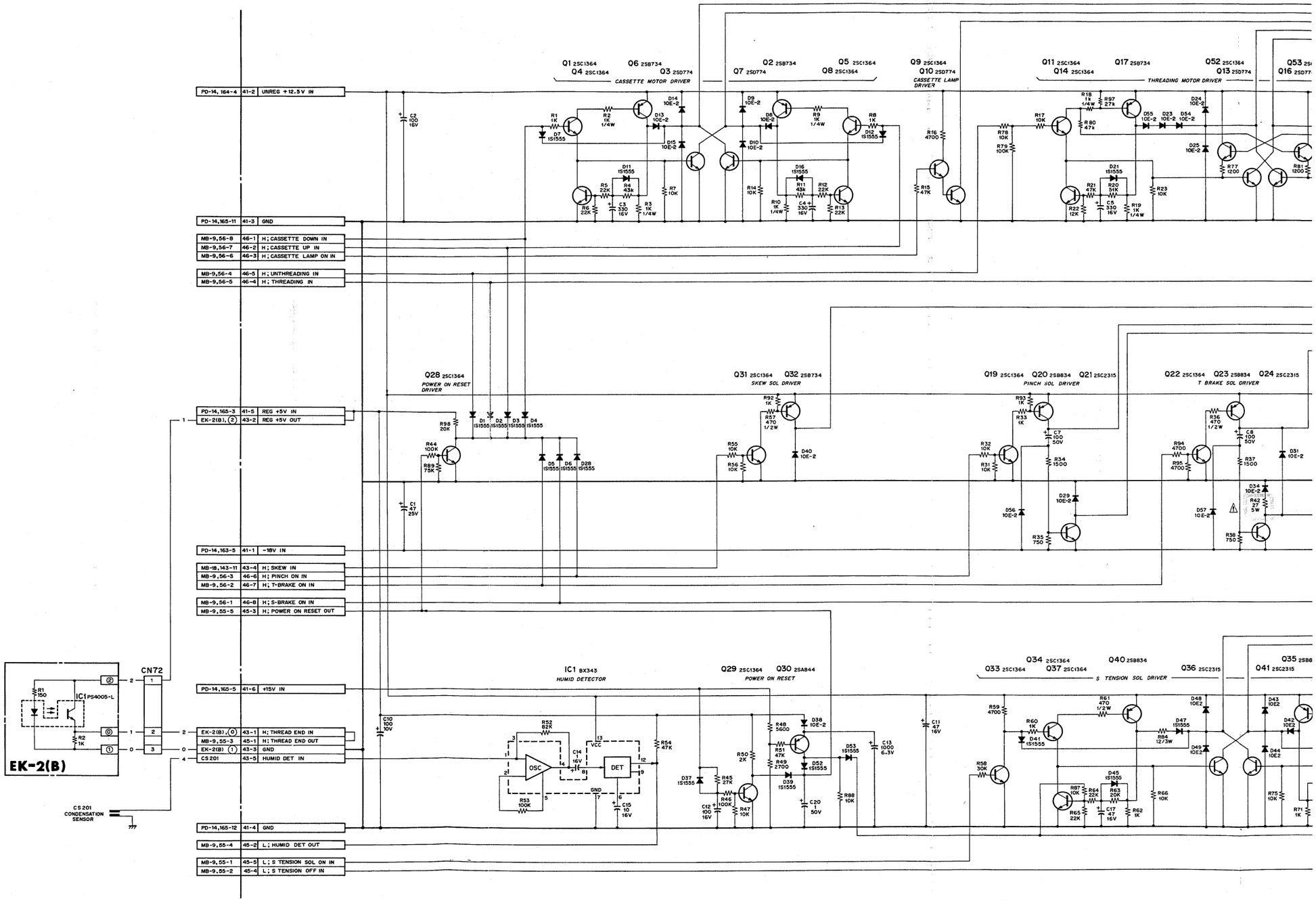

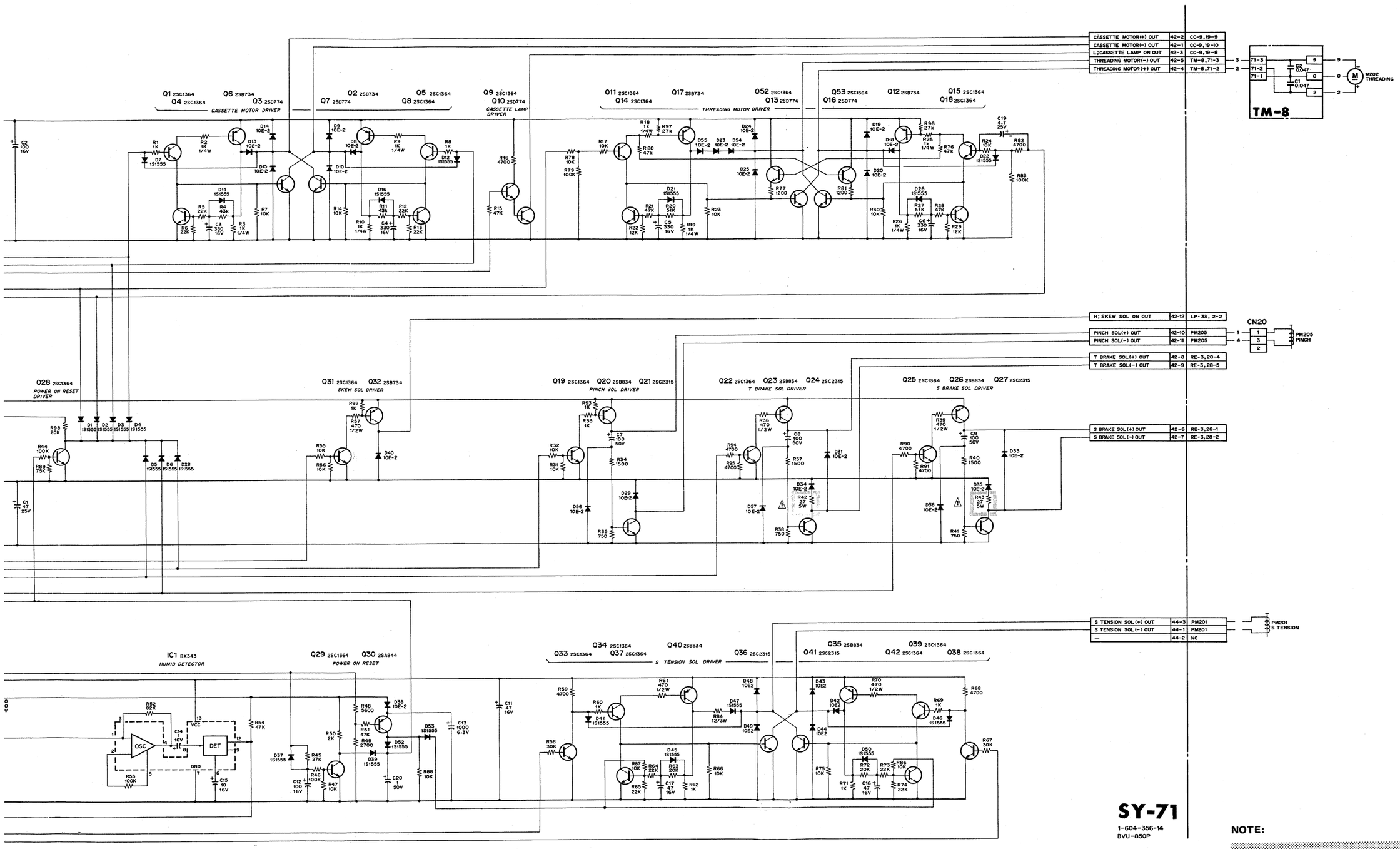

SY-71
1-604-356-14
BVU-850P

NOTE:

The shaded and ⚠-marked components are critical to safety.
Replace only with same components as specified.

LP-33, PR-33, MS-5(E), LMP-1

LP-33; AUDIO REC/PB LEVEL CONTROL
PR-33; REMOTE SELECT
MS-5(E); REMOTE/LOCAL SW
LMP-1; WARNING LAMP

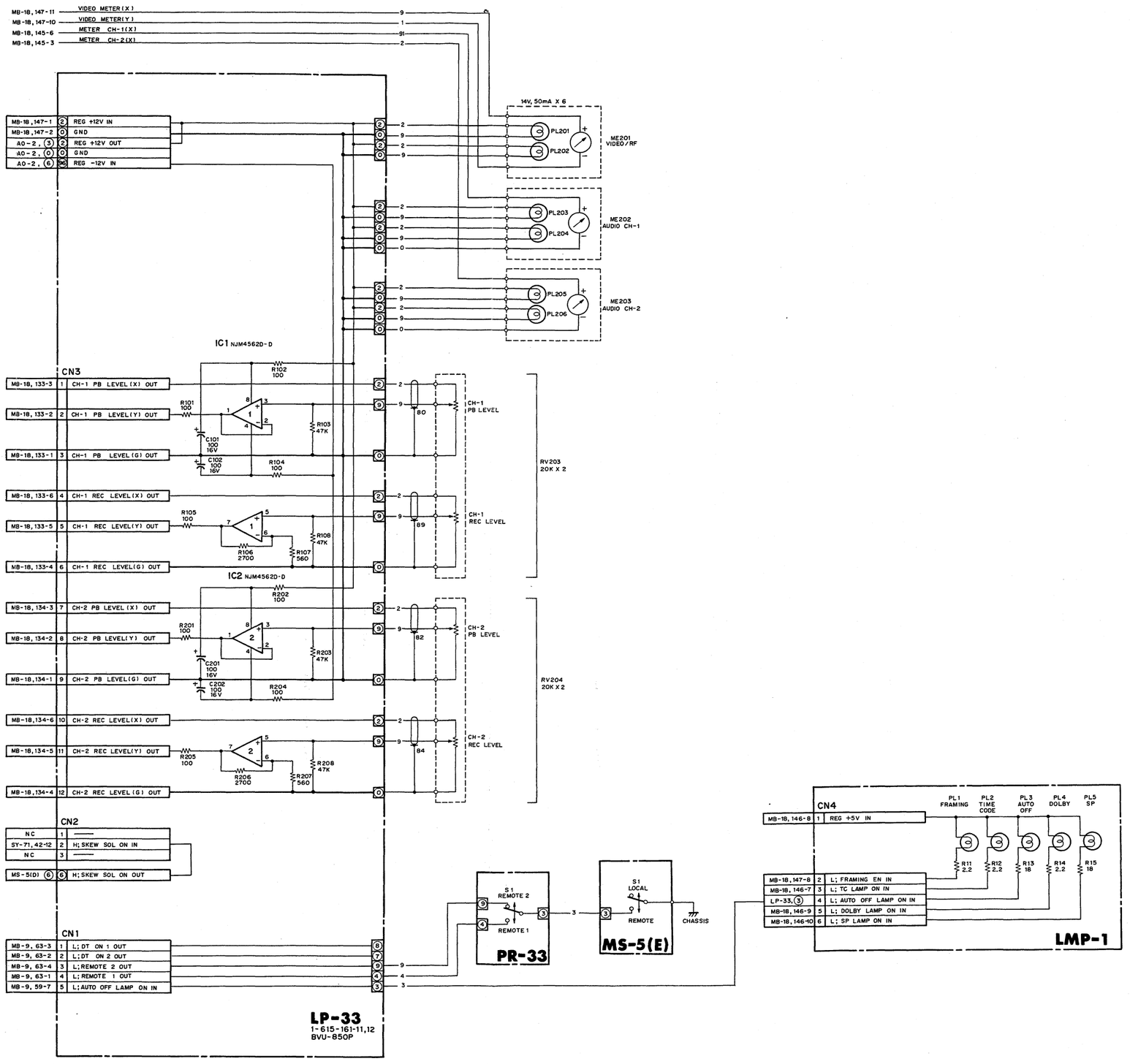

17-171

17-172

CC-9, CC-10, CC-11

CC-9; CASSETTE COMPARTMENT
CC-10; CASSETTE IN DETECTOR
CC-11; CASSETTE DOWN DETECTOR

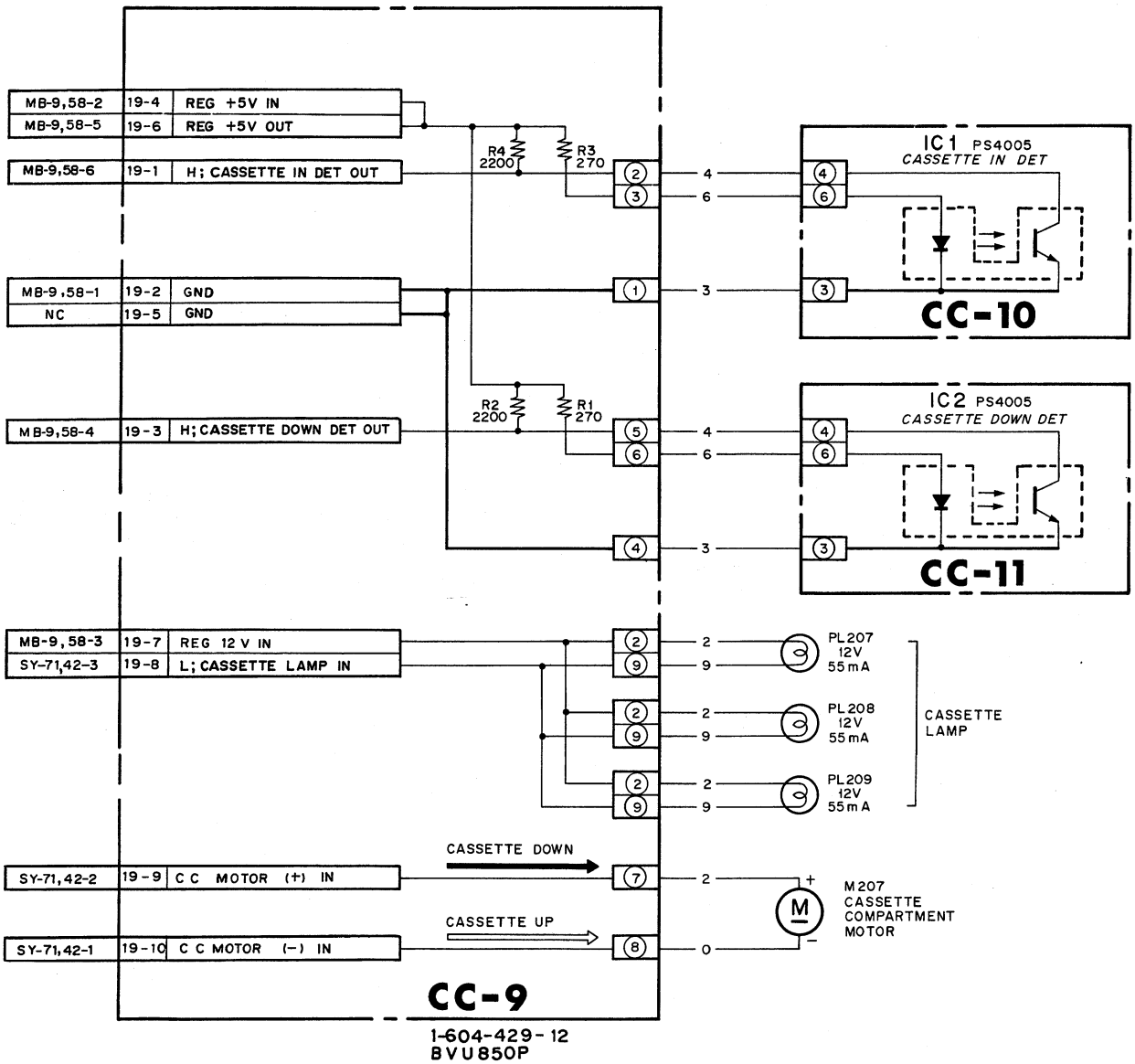

RM-4; REMOTE CONNECTOR

S/N; UP TO 10390

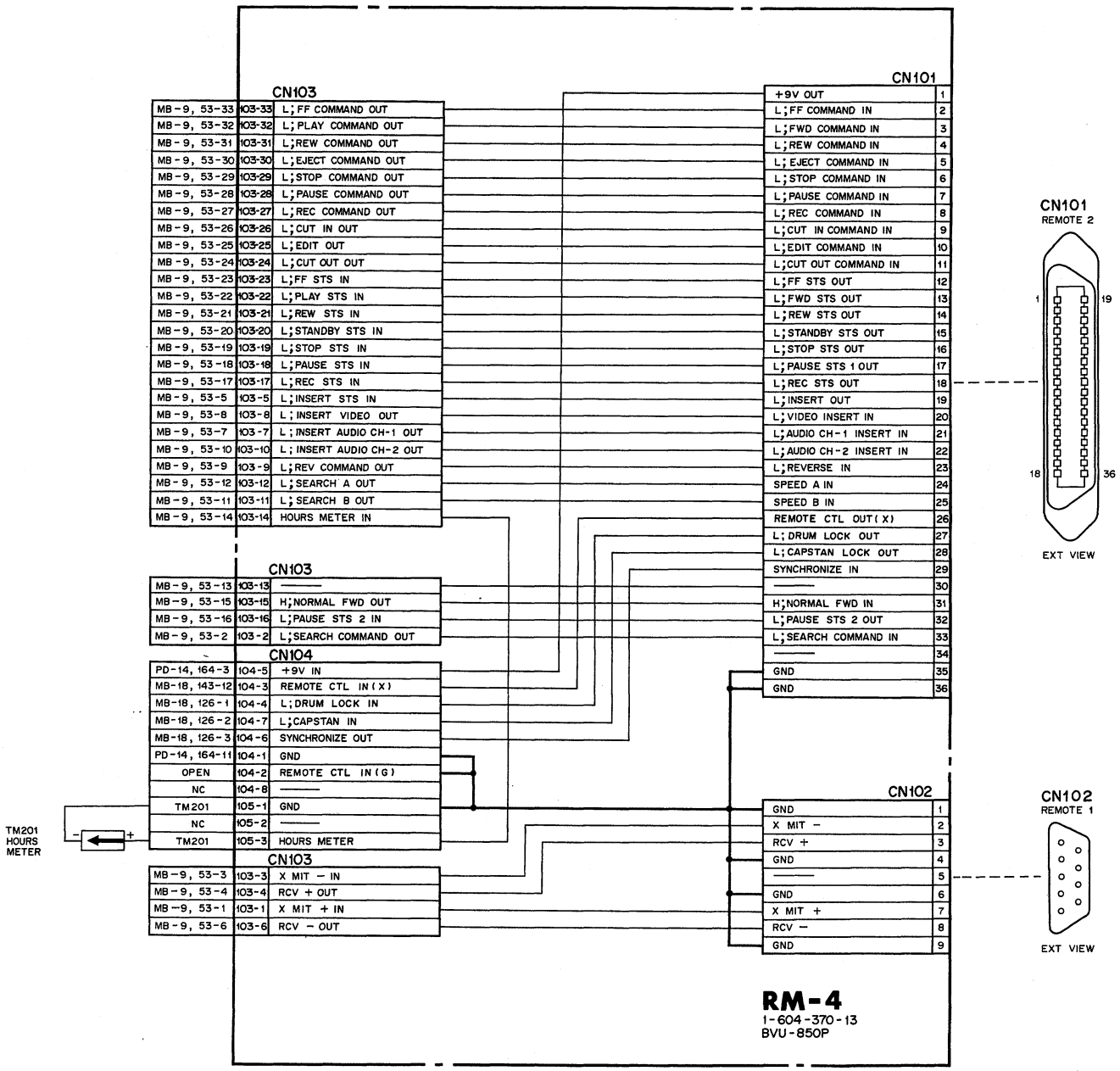

RM-35; REMOTE CONNECTOR/DC FAN

S/N; 10391 and higher

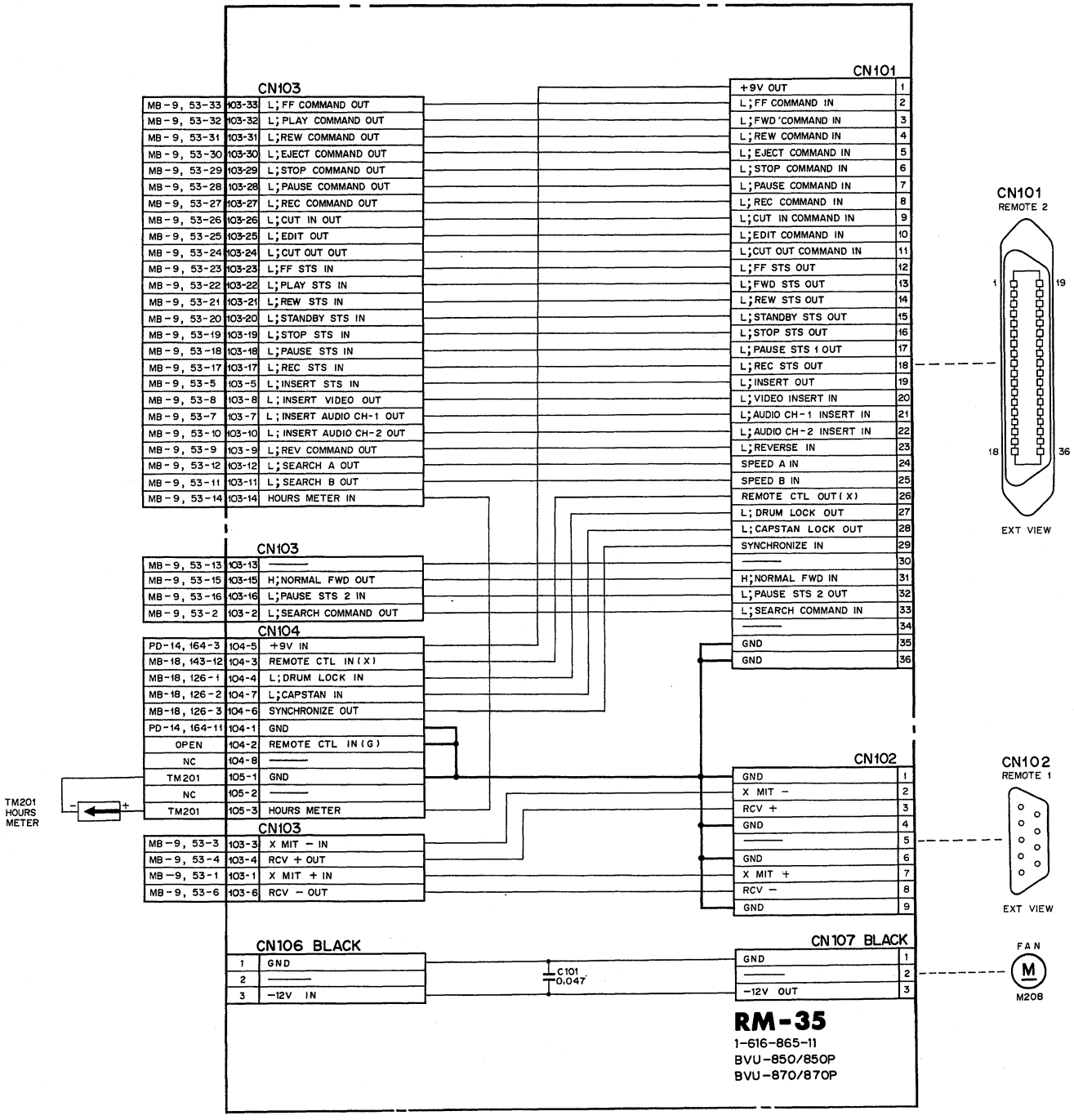

TM-14; TERMINAL

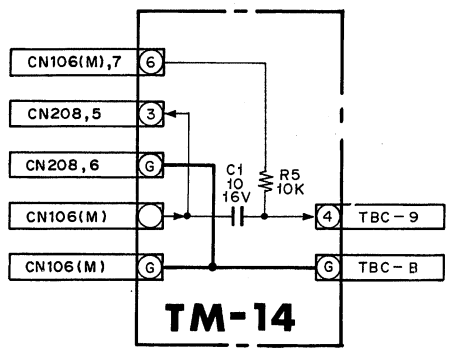

1-606-977-11
BVU-850P

RE-3; T/S-REEL MOTOR
PC-12; TAPE BEGIN/END DETECTOR
PC-8; TAPE BEGIN/END DETECTOR

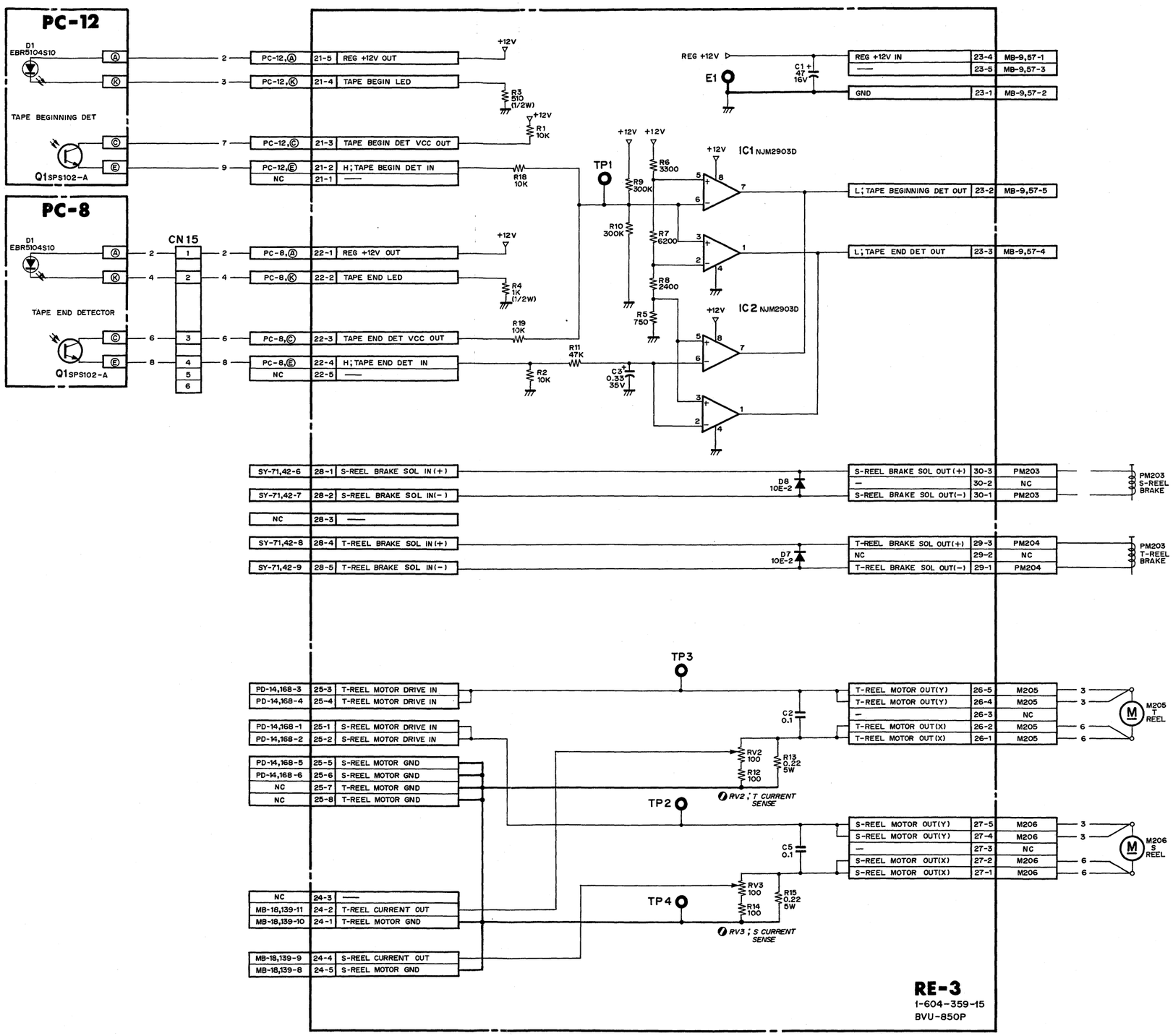

 MB-9, EK-3, EK-2(A), PC7(B)

MB-9; MOTHER BOARD
EK-3; THREAD END DETECTOR
EK-2(A); UNTHREAD END DETECTOR
PC-7(B); MISS REC DETECTOR

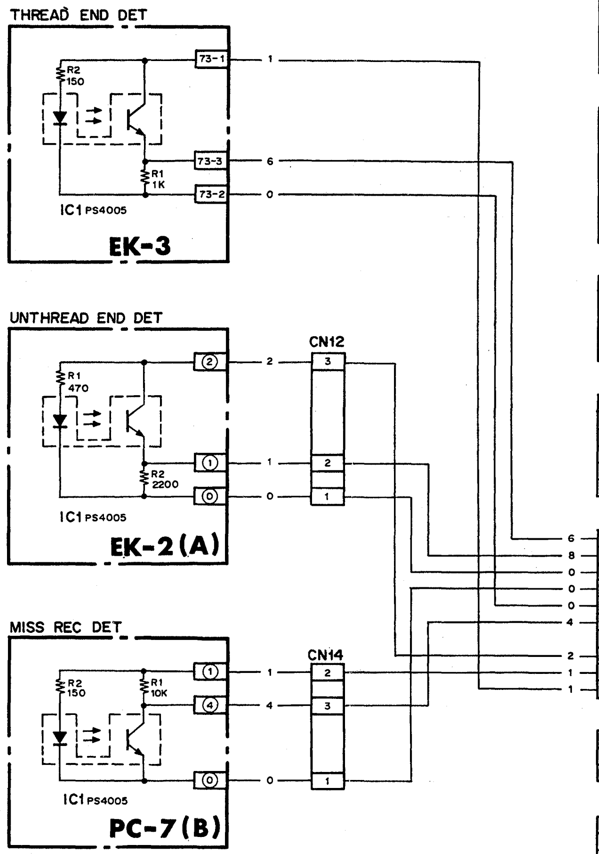

CN55

SY-71,45-5	1	L; TENSION SOL OFF OUT	52-17B
SY-71,45-4	2	L; TENSION SOL ON OUT	52-16B
SY-71,45-1	3	H; THREAD END IN	52-15B
SY-71,45-2	4	L; HUMID DET IN	52-14B
SY-71,45-3	5	H; POWER ON RESET IN	52-36A

CN56

SY-71,46-8	1	H; S-BRAKE ON OUT	52-25B
SY-71,46-7	2	H; T-BRAKE ON OUT	52-24B
SY-71,46-6	3	H; PINCH ON OUT	52-28B
SY-71,46-5	4	H; UNTHREADING OUT	52-22B
SY-71,46-4	5	H; THREADING OUT	52-21B
SY-71,46-3	6	H; CASSETTE LAMP ON OUT	52-20B
SY-71,46-2	7	H; CASSETTE UP OUT	52-19B
SY-71,46-1	8	H; CASSETTE DOWN OUT	52-18B

CN57

RE-3,23-4	1	REG +12V OUT	+12V
RE-3,23-1	2	GND	
RE-3,23-5	3	—	NC
RE-3,23-3	4	L; TAPE END DET IN	52-27B
RE-3,23-2	5	L; TAPE BEGIN DET IN	52-26B

CN58

CC-9,19-2	1	GND		
CC-9,19-4	2	REG +5V OUT	+5V	
CC-9,19-7	3	REG+12V	+12V	
CC-9,19-3	4	H; CASSETTE DOWN DET IN	52-31B	60-2
CC-9,19-6	5	CC CONNECT +5V IN	52-30B	
CC-9,19-1	6	H; CASSETTE IN DET IN	52-29B	

CN59

6	EK-3,73-3	1	H; THREADING END DET IN	52-42A	
8	EK-2(A),①	2	H; UNTHRE END DET IN	52-12B	54-3
0	EK-2(A),⓪	3	GND		
0	PC-7(B),⓪	4	GND		
0	EK-3,73-2	5	GND		
4	PC-7(B),④	6	L; REC ENABLE IN	51-37A	
	LP-33,1-5	7	L; AUTO OFF LAMP ON OUT	52-33B	
2	EK-2(A),②	8	REG +12V OUT	+12V	
1	PC-7(B),①	9	REG +5V OUT	+5V	
1	EK-3,73-1	10	REG +5V OUT	+5V	

CN60

NC	1	H; CAPSTAN FWD OUT	54-21
NC	2	H; CASSETTE DOWN DET OUT	58-4
NC	3	L; STILL/STOP/PAUSE OUT	52-32B

CN61

MB-18,121-2	1	TC-A5 OUT	51-41B
MB-18,121-3	2	TC-A4 OUT	51-42B
MB-18,121-1	3	TC-A2 OUT	51-39B
MB-18,121-4	4	GND	
MB-18,120-9	5	TC-A1 OUT	51-38B
MB-18,120-8	6	TC-A0 OUT	51-37B
MB-18,120-7	7	TC DATA 8 IN	51-36B
MB-18,120-10	8	GND	
MB-18,120-5	9	TC DATA 4 IN	51-35B
MB-18,120-4	10	TC DATA 2 IN	51-34B
MB-18,120-3	11	TC DATA 1 IN	51-33B
MB-18,120-6	12	GND	

CN62

MB-18,121-9	1	TC-A3 OUT	51-40B
MB-18,121-11	2	TC-D8 OUT	51-42A
MB-18,121-10	3	TC-D4 OUT	51-41A
MB-18,121-12	4	GND	
MB-18,121-5	5	TC-A8 OUT	51-40A
MB-18,121-7	6	TC-D1 OUT	51-39A
MB-18,121-6	7	—	51-38A
MB-18,121-8	8	GND	

CN63

LP-33,1-4	1	L; REMOTE (1) IN	51-36A		
LP-33,1-2	2	L; DT ON 2 IN	51-35A		
LP-33,1-1	3	L; DT ON 1 IN	51-34A		
LP-33,1-3	4	L; REMOTE (2) IN	51-7B	52-7A	54-33
NC	5	—	NC		

CN64

PD-14,164-2	1	+9V IN	+9V
PD-14,164-1	2	REG +5V IN	+5V
PD-14,163-3	3	GND	
PD-14,164-10	4	REG +12V IN	+12V
NC	5	—	NC

CN31

KY-9, 40	1	+9V OUT
KY-9, 39	2	+9V OUT
KY-9, 38	3	S1 IN
KY-9, 37	4	GND
KY-9, 36	5	S2 IN
KY-9, 35	6	GND
KY-9, 34	7	S3 IN
KY-9, 33	8	GND
KY-9, 32	9	S4 IN
KY-9, 31	10	GND
KY-9, 30	11	S5 IN
KY-9, 29	12	GND
KY-9, 28	13	S6 IN
KY-9, 27	14	GND
KY-9, 26	15	S1 OUT
KY-9, 25	16	GND
KY-9, 24	17	S2 OUT
KY-9, 23	18	GND
KY-9, 22	19	S3 OUT
KY-9, 21	20	GND
KY-9, 20	21	DIG 0 OUT
KY-9, 19	22	DIG 1 OUT
KY-9, 18	23	DIG 2 OUT
KY-9, 17	24	DIG 3 OUT
KY-9, 16	25	LED A OUT
KY-9, 15	26	LED B OUT
KY-9, 14	27	LED C OUT
KY-9, 13	28	LED D OUT
KY-9, 12	29	LED E OUT
KY-9, 11	30	LED F OUT
KY-9, 10	31	LED G OUT
KY-9, 9	32	—
KY-9, 8	33	—
KY-9, 7	34	—
KY-9, 6	35	—
KY-9, 5	36	—
KY-9, 4	37	—
KY-9, 3	38	—
KY-9, 2	39	MULTI CLOCK OUT
KY-9, 1	40	GND

SY-37A(2/2)

SY-37A

	A	CN51	B		
	GND	1	GND		
+5V	REG +5V IN	2	REG +5V IN	+5V	
+9V	+9V IN	3	+9V IN	+9V	
53-33	L; FF COMMAND IN	4	SV MULTI 2 OUT	54-29	
53-31	L; REW COMMAND IN	5	MULTI CLOCK OUT	54-32	52-5A
53-29	L; STOP COMMAND IN	6	L; STANDBY STS IN	52-6A	
53-17	L; REC STS OUT	7	L; REMOTE (2) IN	63-4	
53-15	H; NORMAL FWD IN	8	SV MULTI 1 OUT	54-30	
53-11	L; SEARCH B IN	9	H; AUDIO CH-1 REC/EE OUT	54-27	
53-9	L; REVERSE COMMAND IN	10	H; AUDIO CH-2 REC/EE OUT	54-28	
53-7	L; AUDIO CH-1 INSERT IN	11	AUDIO REC +12V OUT	54-25	
53-5	L; REMOTE INSERT STS OUT	12	SPEED COMMAND OUT	54-26	52-21A
53-3	X MIT -OUT	13	H; DIAL FWD OUT	52-22A	
53-1	X MIT +OUT	14	L; PLAY COMMAND OUT	52-23A	
53-2	L; SEARCH COMMAND IN	15	L; SEARCH COMMAND OUT	52-24A	
53-4	RCV + IN	16	L; FF COMMAND OUT	52-25A	
53-6	RCV - IN	17	L; REW COMMAND OUT	52-26A	
53-8	L; VIDEO INSERT IN	18	L; EJECT COMMAND OUT	52-27A	
53-10	L; AUDIO CH-2 INSERT IN	19	L; STOP COMMAND OUT	52-28A	
53-12	L; SEARCH A IN	20	L; RELEASE COMMAND OUT	52-29A	
54-34	L; COLOR FRAMING IN	21	L; PLAY STS IN	52-30A	
54-35	H; ASSEMBLE REC/EE OUT	22	L; SEARCH STS IN	52-31A	
54-36	L; SERVO LOCK IN	23	L; FF STS IN	52-32A	
54-37	1/2 VD IN	24	L; REW STS IN	52-33A	
54-38	EIA\CCIR OUT	25	L; EJECT STS IN	52-34A	
54-39	H; CH-2 ADVANCE ERASE OUT	26	L; STOP STS IN	52-35A	
54-40	H; RESET OUT	27	L; PAUSE STS 1 IN	52-36B	
53-24	L; CUT OUT IN	28	↑ENREG SW OUT	52-37A	
53-25	L; EDIT IN	29	L; THREAD END IN	52-38A	
53-26	L; CUT IN COMMAND IN	30	L; EMERGENCY IN	52-39A	
53-27	L; REC COMMAND IN	31	H; CH-1 ADVANCE ERASE OUT	54-1	
53-30	L; EJECT COMMAND IN	32	H; POWER ON RESET OUT	52-40A	
53-32	L; PLAY COMMAND IN	33	TC DATA 1 IN	61-11	
63-3	L; DT ON 1 IN	34	TC DATA 2 IN	61-10	
63-2	L; DT ON 2 IN	35	TC DATA 4 IN	61-9	
63-1	L; REMOTE (1) IN	36	TC DATA 8 IN	61-7	
59-6	L; REC ENABLE IN	37	TC-A0 OUT	61-6	
62-7	—	38	TC-A1 OUT	61-5	
62-6	TC-D1 OUT	39	TC-A2 OUT	61-3	
62-5	TC-A8 OUT	40	TC-A3 OUT	62-1	
62-3	TC-D4 OUT	41	TC-A5 OUT	61-1	
62-2	TC-D8 OUT	42	TC-A4 OUT	61-2	
	GND	43	GND		

SY-36

	A	CN52	B		
	GND	1	GND		
+5V	REG +5V IN	2	REG +5V IN	+5V	
NC	—	3	—	NC	
+12V	REG +12V IN	4	REG +12V IN	+12V	
51-5B	MULTI CLOCK IN	5	H; DRUM ROTATE IN	54-10	
51-6B	L; STANDBY STS OUT	6	H; SERVO EN OUT	54-9	
63-4	L; REMOTE (2) IN	7	L; SEARCH STS OUT	54-12	
54-11	H; T REEL BRAKE OUT	8	L; FF/REW OUT	54-7	
54-14	H; S REEL BRAKE OUT	9	H; PLAY STS OUT	54-8	
54-13	RS MULTI 1 OUT	10	H; CAPSTAN STILL IN	54-5	
54-16	RS MULTI 2 OUT	11	L; REVERSE COMMAND	53-9	
54-15	H; FUNCTION EN IN	12	H; UNTHREAD END DET IN	59-2	
54-18	L; TAPE PROTECT IN	13	L; POWER ON OUT	54-4	
54-17	H; MECHA BRAKE IN	14	L; HUMID DET IN	55-4	
54-20	H; THREADING MOTOR OFF OUT	15	H; THREAD END IN	55-3	
54-19	H; THEADING MOTOR DIS IN	16	L; S TENSION SOL ON OUT	55-2	
54-22	H; REEL FWD IN	17	L; S TENSION SOL OFF OUT	55-1	
54-21	H; CAPSTAN FWD IN	18	H; CASSETTE DOWN OUT	56-8	
54-24	L; LESS THAN < x 1.2 IN	19	H; CASSETTE UP OUT	56-7	
54-23	—	20	H; CASSETTE LAMP ON OUT	56-6	
51-12B	SPEED COMMAND IN	21	H; THREADING OUT	56-5	
51-13B	L; DIAL FWD IN	22	H; UNTHREADING OUT	56-4	
51-14B	L; PLAY COMMAND IN	23	H; PINCH ON (DT) OUT	54-6	
51-15B	L; SEARCH COMMAND IN	24	H; T-BRAKE ON OUT	56-2	
51-16B	L; FF COMMAND IN	25	H; S-BRAKE ON OUT	56-1	
51-17B	L; REW COMMAND IN	26	L; TAPE BEGIN DET IN	57-5	
51-18B	L; EJECT COMMAND IN	27	L; TAPE END DET IN	57-4	
51-19B	L; STOP COMMAND IN	28	H; PINCH ON OUT	56-3	
51-20B	L; RELEASE COMMAND IN	29	H; CASSETTE IN DET IN	58-6	
51-21B	L; PLAY STS OUT	30	CC CONNECT +5V IN	58-5	
51-22B	L; SEARCH STS OUT	31	H; CASSETTE DOWN DET IN	58-4	
51-23B	L; FF STS OUT	32	L; STILL/STOP/PAUSE OUT	60-3	
51-24B	L; REW STS OUT	33	L; AUTO OFF LAMP ON OUT	59-7	
51-25B	L; EJECT STS OUT	34	HOURS METER	53-14	
51-26B	L; STOP STS OUT	35	L; PAUSE STS 2 OUT	53-16	
55-5	H; POWER ON RESET IN	36	L; PAUSE STS 1 OUT	53-18	51-27B
51-28B	TEN REG SW IN	37	L; STOP STS OUT	53-19	
51-29B	L; THREAD END OUT	38	L; STANDBY STS OUT	53-20	54-2
51-30B	L; EMERGENCY OUT	39	L; REW STS OUT	53-21	
51-32B	H; POWER ON RESET IN	40	L; PLAY STS OUT	53-22	
54-31	H; PINCH ON < x1.2 OUT	41	L; FF STS OUT	53-23	
59-1	H; THREAD END DET IN	42	L; PAUSE COMMAND IN	53-28	
	GND	43	GND		

CN53 (TO CN103 / RM-4 34P FLAT CABLE; RM-4 ⟶ RM-35 S/N; 10391~)

	51-14A	X MIT + OUT	1
	51-15A	L; SEARCH COMMAND IN	2
	51-13A	X MIT - OUT	3
	51-16A	RCV+IN	4
	51-12A	L; INSERT STS OUT	5
	51-17A	RCV-IN	6
	51-11A	L; AUDIO CH-1 INSERT IN	7
	51-18A	L; VIDEO INSERT IN	8
52-11B	51-10A	L; REVERCE COMMAND IN	9
	51-19A	L; AUDIO CH-2 INSERT IN	10
	51-9A	L; SEARCH B IN	11
	51-20A	L; SEARCH A IN	12
	NC	—	13
	52-34B	HOURS METER OUT	14
	51-8A	H; NORMAL FWD PB IN	15
	52-35B	L; PAUSE STS 2 OUT	16
	51-7A	L; REC STS OUT	17
	52-36B	L; PAUSE STS 1 OUT	18
	52-37B	L; STOP STS OUT	19
	52-38B	L; STANDBY STS OUT	20
	52-39B	L; REW STS OUT	21
	52-40B	L; PLAY STS OUT	22
	52-41B	L; FF STS OUT	23
	51-28A	L; CUT OUT IN	24
	51-29A	L; EDIT IN	25
	51-30A	L; CUT IN IN	26
	51-31A	L; REC COMMAND IN	27
	52-42B	L; PAUSE COMMAND IN	28
	51-6A	L; STOP COMMAND IN	29
	51-32A	L; EJECT COMMAND IN	30
	51-5A	L; REW COMMAND IN	31
	51-33A	L; PLAY COMMAND IN	32
	51-4A	L; FF COMMAND IN	33
		GND	34

CN54 (TO CN142/MB-18 40P FLAT CABLE)

	51-31B	H; CH-1 ADVANCE ERASE OUT	1
	52-38B	L; STANDBY STS OUT	2
	59-2	H; UNTHREAD END DET OUT	3
	52-13B	L; POWER ON OUT	4
	52-10B	H; CAPSTAN STILL IN	5
	52-23B	H; PINCH ON (DT) OUT	6
	52-8B	L; FF/REW OUT	7
	52-9B	H; PLAY STS OUT	8
	52-6B	H; SERVO EN OUT	9
	52-5B	H; DRUM ROTATE IN	10
	52-8A	H; T REEL BRAKE OUT	11
	52-7B	L; SEARCH STS OUT	12
	52-10A	RS MULTI 1 OUT	13
	52-9A	H; S REEL BRAKE OUT	14
	52-12A	H; FUNCTION EN IN	15
	52-11A	RS MULTI 2 OUT	16
	52-14A	H; MECHA BRAKE IN	17
	52-13A	L; TAPE PROTECT IN	18
	52-16A	H; THREADING MOTOR DIS IN	19
	52-15A	H; THREADING MOTOR OFF OUT	20
60-1	52-18A	H; CAPSTAN FWD IN	21
	52-17A	H; REEL FWD IN	22
	52-20A	—	23
	52-19A	L; LESS THAN < x 1.2 IN	24
	51-11B	AUDIO REC +12V OUT	25
	51-12B	SPEED COMMAND OUT	26
	51-9B	H; AUDIO CH-1 REC/EE OUT	27
	51-10B	H; AUDIO CH-2 REC/EE OUT	28
	51-4B	SV MULTI 2 OUT	29
	51-8B	SV MULTI 1 OUT	30
	52-41A	H; PINCH ON < x1.2 OUT	31
	51-5B	MULTI LOCK OUT	32
	63-4	L; REMOTE (2) OUT	33
	51-21A	L; COLOR FRAMING IN	34
	51-22A	H; ASSEMBLE REC/EE OUT	35
	51-23A	L; SERVO LOCK IN	36
	51-24A	1/2 VD IN	37
	51-25A	EIA\CCIR OUT	38
	51-26A	H; CH-2 ADVANCE ERASE OUT	39
	51-27A	H; RESET OUT	40

MB-9
1-604-374-11
BVU-850P
BVU-850

SP537 / Druck 96

MB-18-1, PC-7, PH-1, LE-4, EM-1, TM-4, TC-12, MS-5, LV-1

MB-18-1; MOTHER BOARD
PC-7(A); KCA/KCS DETECTOR
PH-1(A); LE-4(A); S-REEL TENSION DETECTOR
PH-1(B); LE-4(B); T-REEL TENSION DETECTOR
EM-1; S/T-REEL DME
TM-4; TC-12; CTL R/P, TC R/P HEAD
MS-5(A); AUDIO LIMITER SW
MS-5(B); MIXING SELECT
MS-5(C); MODE SELECT
MS-5(D); DUB/LINE SELECT
LV-1; VIDEO LEVEL VR

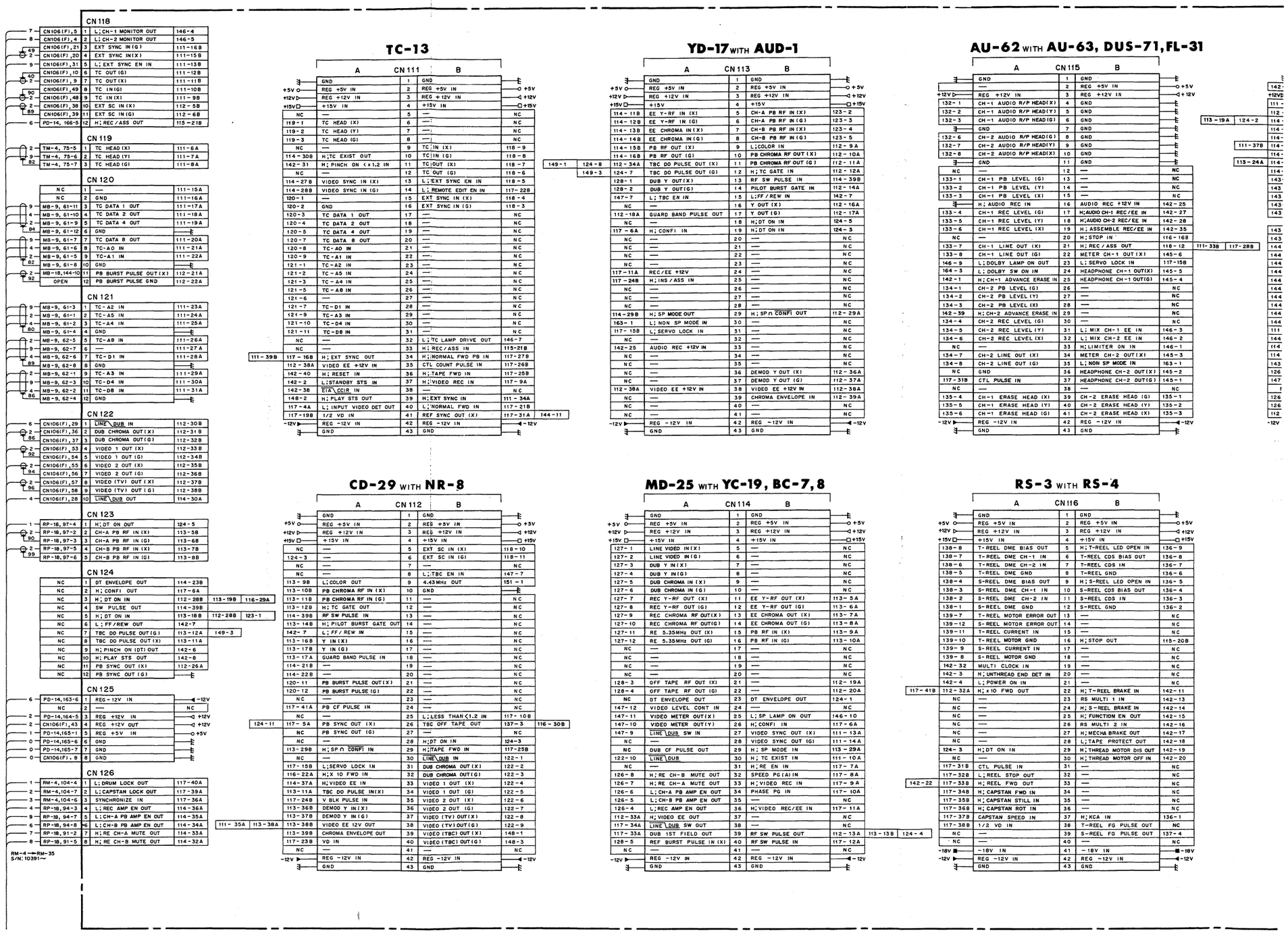

MB-18-1, PC-7, PH-1, LE-4, EM-1, TM-4, TC-12, MS-5, LV-1

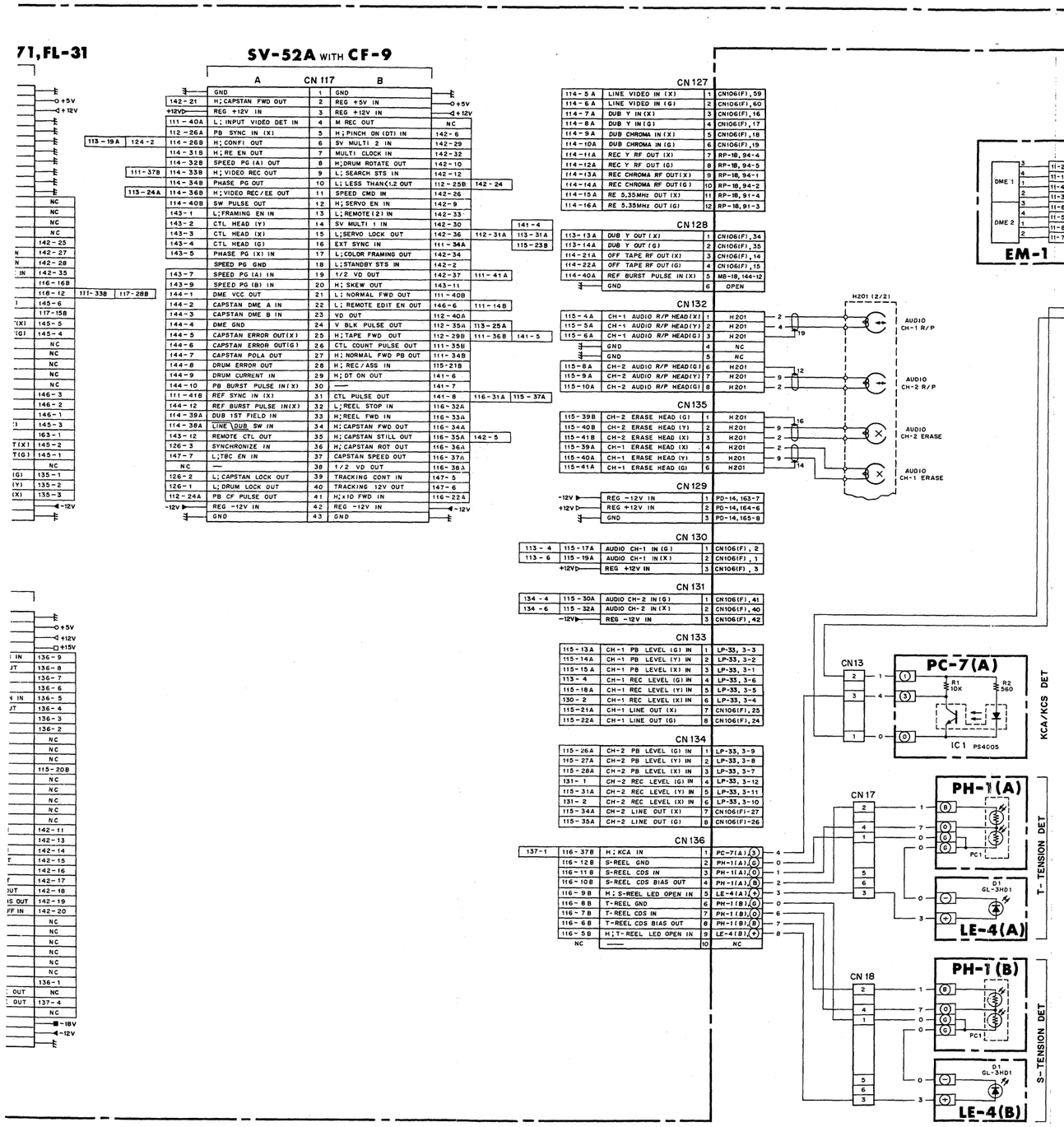

FRAME (1/2)

S/N; UP TO 10390

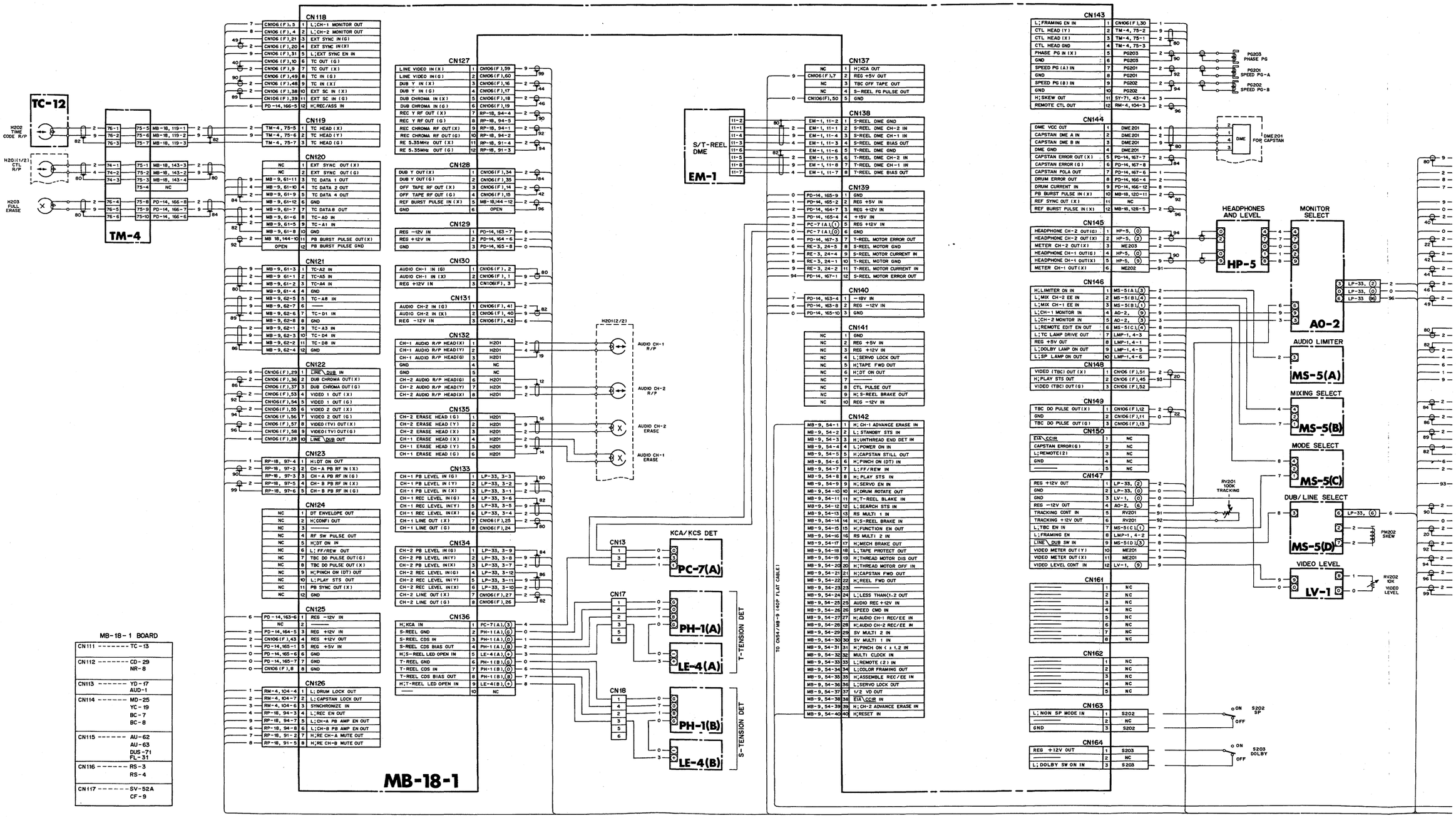

MB-18-1 BOARD

CN111	TC-13
CN112	CD-29, NR-8
CN113	YD-17, AUD-1
CN114	MD-25, YC-19, BC-7, BC-8
CN115	AU-62, AU-63, DUS-71, FL-31
CN116	RS-3, RS-4
CN117	SV-52A, CF-9

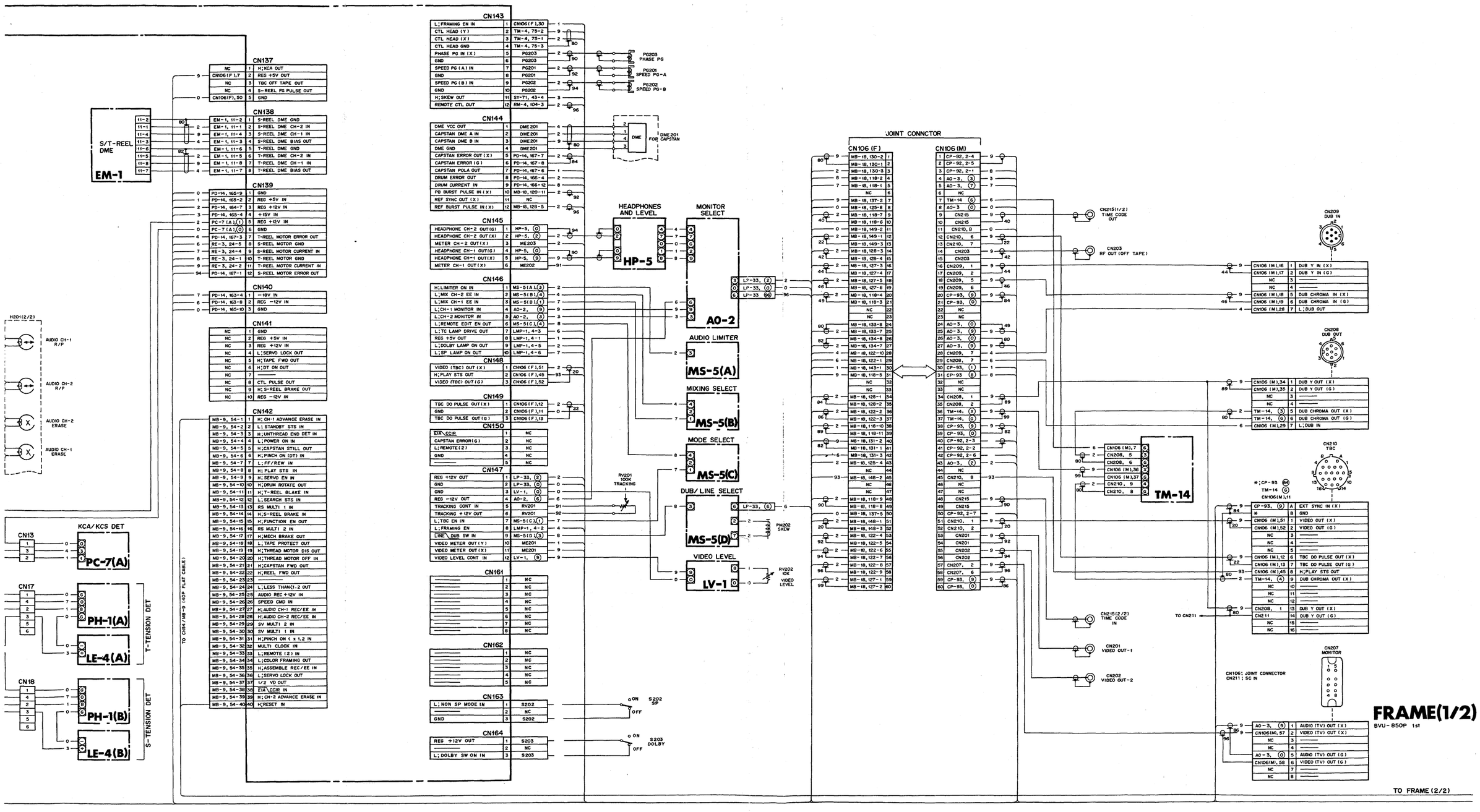

FRAME(1/2)
BVU-850P 1st

FRAME (2/2) **S/N; UP TO 10390**

SY-71

CN41

−18V IN	1	PD−14,163−5	7
UNREG +12.5V IN	2	PD−14,164−4	4
GND	3	PD−14,165−11	0
GND	4	PD−14,165−12	0
REG +5V IN	5	PD−14,165−3	1
+15V IN	6	PD−14,165−5	3

CN42

CASSETTE MOTOR (−) OUT	1	CC−9,19−10	9
CASSETTE MOTOR (+) OUT	2	CC−9,19−9	8
L;CASSETTE LAMP ON OUT	3	CC−9,19−8	7
THREADING MOTOR (+) OUT	4	TM−8,71−2	2
THREADING MOTOR (−) OUT	5	TM−8,71−3	3
S BRAKE SOL(+) OUT	6	RE−3,28−1	91
S BRAKE SOL(−) OUT	7	RE−3,28−2	92
T BRAKE SOL(+) OUT	8	RE−3,28−4	93
T BRAKE SOL(−) OUT	9	RE−3,28−5	94
PINCH SOL(+) OUT	10	PM205	1
PINCH SOL(−) OUT	11	PM205	4
H;SKEW SOL ON OUT	12	LP−33,2−2	6

CN43

H;THREAD END IN	1	EK−2(B) (0)	2
REG +5V OUT	2	EK−2(B) (2)	1
GND	3	EK−2(B) (1)	0
H;SKEW IN	4	MB−18,143−11	3
HUMID DET IN	5	CS201	4

CN44

S TENSION SOL (−) OUT	1	PM201	
——	2	NC	
S TENSION SOL (+) OUT	3	PM201	

CN45

H;THREAD END OUT	1	MB−9,55−3	3
L;HUMID DET OUT	2	MB−9,55−4	4
H;POWER ON RESET OUT	3	MB−9,55−5	6
L;S−TENSION SOL OFF IN	4	MB−9,55−2	2
L;S−TENSION SOL ON IN	5	MB−9,55−1	1

CN46

H;CASSETTE DOWN IN	1	MB−9,56−8	1
H;CASSETTE UP IN	2	MB−9,56−7	2
H;CASSETTE LAMP ON IN	3	MB−9,56−6	3
H;THREADING IN	4	MB−9,56−5	4
H;UNTHREADING IN	5	MB−9,56−4	6
H;PINCH ON IN	6	MB−9,56−3	7
H;T−BRAKE ON IN	7	MB−9,56−2	8
H;S−BRAKE ON IN	8	MB−9,56−1	9

CN20 — PM205 PINCH

CS201 CONDENSATION SENSOR

PM201 S TENSION

CASSETTE IN DET — **CC-10**

CASSETTE DOWN DET — **CC-11**

CASSETTE LAMP: PL207, PL208, PL209

M207 CASSETTE COMPARTMENT

CN19

1	MB−9,58−6	6	
2	MB−9,58−1	0	
3	MB−9,58−4	3	
4	MB−9,58−2	1	
5	NC		
6	MB−9,58−5	1	
7	MB−9,58−3	2	
8	SY−71,42−3	7	
9	SY−71,42−2	8	
10	SY−71,42−1	9	

CC-9

UNTHREAD END DET — **EK-2(A)**

CN12

MB−9,59−8	2	3	2
MB−9,59−2	1	2	8
MB−9,59−3	0	1	0

MISS REC DET — **PC-7(B)**

CN14

MB−9,59−9	1	2	1
MB−9,59−6	4	3	4
MB−9,59−4	0	1	0

THREAD END DET 1 — **EK-3**

73−1	MB−9,59−10	1
73−2	MB−9,59−5	0
73−3	MB−9,59−1	6

CN55

SY−71,45−5	1	L;S−TENSION SOL OFF OUT	1
SY−71,45−4	2	L;S−TENSION SOL ON OUT	2
SY−71,45−1	3	H;THREAD END IN	3
SY−71,45−2	4	L;HUMID DET IN	4
SY−71,45−3	5	H;POWER ON RESET IN	5

CN56

SY−71,46−8	1	H;S−BRAKE ON OUT	9
SY−71,46−7	2	H;T−BRAKE ON OUT	8
SY−71,46−6	3	H;PINCH ON OUT	7
SY−71,46−5	4	H;UNTHREADING OUT	6
SY−71,46−4	5	H;THREADING OUT	4
SY−71,46−3	6	H;CASSETTE LAMP ON OUT	3
SY−71,46−2	7	H;CASSETTE UP OUT	2
SY−71,46−1	8	H;CASSETTE DOWN OUT	1

CN57

RE−3,23−4	1	REG +12V OUT	2
RE−3,23−1	2	GND	0
RE−3,23−5	3	—	1
RE−3,23−3	4	L;TAPE END DET IN	3
RE−3,23−2	5	L;TAPE BEGIN DET IN	4

CN58

CC−9,19−2	1	GND	0
CC−9,19−4	2	REG +5V OUT	1
CC−9,19−7	3	REG +12V	2
CC−9,19−3	4	H;CASSETTE DOWN DET IN	3
CC−9,19−6	5	CC CONNECT +5V IN	1
CC−9,19−1	6	H;CASSETTE IN DET IN	6

CN59

EK−3,73−3	1	H;THREADING END DET IN	6
EK−2(A) (1)	2	H;UNTHRE END DET IN	8
EK−2(A) (0)	3	GND	0
PC−7(B) (0)	4	GND	0
EK−3,73−2	5	GND	0
PC−7(B) (4)	6	L;REC ENABLE IN	4
LP−33,1−5	7	L;AUTO OFF LAMP ON OUT	7
EK−2(A) (2)	8	REG +12V OUT	2
PC−7(B) (1)	9	REG +5V OUT	1
EK−3,73−1	10	REG +5V OUT	1

CN60

NC	1	H;CAPSTAN FWD OUT	
NC	2	H;CASSETTE DOWN DET OUT	
NC	3	L;STILL/STOP/PAUSE OUT	

CN61

MB−18,121−2	1	TC−A5 OUT	2
MB−18,121−3	2	TC−A4 OUT	4
MB−18,121−1	3	TC−A2 OUT	9
MB−18,121−4	4	GND	80
MB−18,120−9	5	TC−A1 OUT	2
MB−18,120−8	6	TC−A0 OUT	4
MB−18,120−7	7	TC DATA 8 IN	9
MB−18,120−10	8	GND	82
MB−18,120−5	9	TC DATA 4 IN	2
MB−18,120−4	10	TC DATA 2 IN	4
MB−18,120−3	11	TC DATA 1 IN	9
MB−18,120−6	12	GND	84

CN62

MB−18,121−9	1	TC−A3 OUT	2
MB−18,121−11	2	TC−D8 OUT	4
MB−18,121−10	3	TC−D4 OUT	9
MB−18,121−12	4	GND	86
MB−18,121−5	5	TC−A8 OUT	2
MB−18,121−7	6	TC−D1 OUT	4
MB−18,121−6	7	—	9
MB−18,121−8	8	GND	89

CN63

LP−33,1−4	1	L;REMOTE (1) IN	4
LP−33,1−2	2	L;DT ON 2 IN	2
LP−33,1−1	3	L;DT ON 1 IN	1
LP−33,1−3	4	L;REMOTE (2) IN	3
NC	5	——	

CN64

PD−14,164−2	1	+9V IN	9
PD−14,164−1	2	REG+5V IN	1
PD−14,163−3	3	GND	0
PD−14,164−10	4	REG+12V IN	2
NC	5	—	

MB-9
SY-36-------CN52
SY-37A(1/2)---CN51

CN53

X MIT+ OUT	1	RM−4,103−1	
L;SEARCH COMMAND IN	2	RM−4,103−2	
X MIT− OUT	3	RM−4,103−3	
RCV+ IN	4	RM−4,103−4	
L;INSERT STS OUT	5	RM−4,103−5	
RCV− IN	6	RM−4,103−6	
L;INSERT AUDIO CH−1 IN	7	RM−4,103−7	
L;INSERT VIDEO IN	8	RM−4,103−8	
L;REV COMMAND IN	9	RM−4,103−9	
L;INSERT AUDIO CH−2 IN	10	RM−4,103−10	
L;SEARCH B IN	11	RM−4,103−11	
L;SEARCH A IN	12	RM−4,103−12	
——	13	RM−4,103−13	
HOURS METER OUT	14	RM−4,103−14	
H;NORMAL FWD IN	15	RM−4,103−15	
L;PAUSE STS 2 OUT	16	RM−4,103−16	
L;REC STS OUT	17	RM−4,103−17	
L;PAUSE STS 1 OUT	18	RM−4,103−18	
L;STOP STS OUT	19	RM−4,103−19	
L;STANDBY STS OUT	20	RM−4,103−20	
L;REW STS OUT	21	RM−4,103−21	
L;PLAY STS OUT	22	RM−4,103−22	
L;FF STS OUT	23	RM−4,103−23	
L;CUT OUT IN	24	RM−4,103−24	
L;EDIT IN	25	RM−4,103−25	
L;CUT IN IN	26	RM−4,103−26	
L;REC COMMAND IN	27	RM−4,103−27	
L;PAUSE COMMAND IN	28	RM−4,103−28	
L;STOP COMMAND IN	29	RM−4,103−29	
L;EJECT COMMAND IN	30	RM−4,103−30	
L;REW COMMAND IN	31	RM−4,103−31	
L;PLAY COMMAND IN	32	RM−4,103−32	
L;FF COMMAND IN	33	RM−4,103−33	
GND	34	RM−4,103−34	

34P FLAT CABLE

CN54

H;CH−1 ADVANCE ERASE OUT	1	MB−18,142−1	
L;STANDBY OUT	2	MB−18,142−2	
H;UNTHREAD END OUT	3	MB−18,142−3	
L;POWER ON OUT	4	MB−18,142−4	
H;CAPSTAN STILL IN	5	MB−18,142−5	
H;PINCH ON(DT) OUT	6	MB−18,142−6	
L;FF/REW OUT	7	MB−18,142−7	
H;PLAY STS OUT	8	MB−18,142−8	
H;SERVO EN OUT	9	MB−18,142−9	
H;DRUM ROTATE IN	10	MB−18,142−10	
H;T−REEL BRAKE OUT	11	MB−18,142−11	
L;SEARCH STS OUT	12	MB−18,142−12	
RS MULTI 1 OUT	13	MB−18,142−13	
H;S−REEL BRAKE OUT	14	MB−18,142−14	
H;FUNCTION EN IN	15	MB−18,142−15	
RS MULTI 2 OUT	16	MB−18,142−16	
H;MECHA BRAKE IN	17	MB−18,142−17	
L;TAPE PROTECT IN	18	MB−18,142−18	
H;THREAD MOTOR DIS IN	19	MB−18,142−19	
H;THREAD MOTOR OFF OUT	20	MB−18,142−20	
H;CAPSTAN FWD OUT	21	MB−18,142−21	
H;REEL FWD IN	22	MB−18,142−22	
——	23	MB−18,142−23	
L;LESS THAN(1,2 IN	24	MB−18,142−24	
AUDIO REC 12V OUT	25	MB−18,142−25	
SPEED COMMAND OUT	26	MB−18,142−26	
H;AUDIO CH−1 REC/EE OUT	27	MB−18,142−27	
H;AUDIO CH−2 REC/EE OUT	28	MB−18,142−28	
SV MULTI 2 OUT	29	MB−18,142−29	
SV MULTI 1 OUT	30	MB−18,142−30	
H;PINCH ON (X12 OUT	31	MB−18,142−31	
MULTI CLOCK OUT	32	MB−18,142−32	
L;REMOTE (2) OUT	33	MB−18,142−33	
L;COLOR FRAMING IN	34	MB−18,142−34	
H;ASSEMBLE REC/EE OUT	35	MB−18,142−35	
L;SERVO LOCK IN	36	MB−18,142−36	
1/2 VD IN	37	MB−18,142−37	
EIA \ CCIR OUT	38	MB−18,142−38	
H;CH−2 ADVANCE ERASE OUT	39	MB−18,142−39	
H;RESET OUT	40	MB−18,142−40	

TO CN182/MB−18140P FLAT CABLE)

THREAD END DET 2 — **EK-2(B)**

CN72

1	2	SY−71,43−2	2
2	1	SY−71,43−1	0
3	0	SY−71,43−3	1

THREADIND MOTOR — **TM-8** — M202 THREADING

NC	71−1	
SY−71,42−4	71−2	
SY−71,42−5	71−3	

RM-4

CN103

MB−9,53−1	1	X MIT+ IN	1
MB−9,53−2	2	L;SEARCH COMMAND OUT	2
MB−9,53−3	3	X MIT− IN	3
MB−9,53−4	4	RCV+ OUT	4
MB−9,53−5	5	L;INSERT STS IN	5
MB−9,53−6	6	RCV− OUT	6
MB−9,53−7	7	L;INSERT AUDIO CH−1 OUT	7
MB−9,53−8	8	L;INSERT VIDEO OUT	8
MB−9,53−9	9	L;REV COMMAND OUT	9
MB−9,53−10	10	L;INSERT AUDIO CH−2 OUT	10
MB−9,53−11	11	L;SEARCH B OUT	11
MB−9,53−12	12	L;SEARCH A OUT	12
MB−9,53−13	13	——	13
MB−9,53−14	14	HOURS METER IN	14
MB−9,53−15	15	H;NORMAL FWD OUT	15
MB−9,53−16	16	L;PAUSE STS 2 IN	16
MB−9,53−17	17	L;REC STS IN	17
MB−9,53−18	18	L;PAUSE STS 1 IN	18
MB−9,53−19	19	L;STOP STS IN	19
MB−9,53−20	20	L;STANDBY STS IN	20
MB−9,53−21	21	L;REW STS IN	21
MB−9,53−22	22	L;PLAY STS IN	22
MB−9,53−23	23	L;FF STS IN	23
MB−9,53−24	24	L;CUT OUT OUT	24
MB−9,53−25	25	L;EDIT OUT	25
MB−9,53−26	26	L;CUT IN OUT	26
MB−9,53−27	27	L;REC COMMAND OUT	27
MB−9,53−28	28	L;PAUSE COMMAND OUT	28
MB−9,53−29	29	L;STOP COMMAND OUT	29
MB−9,53−30	30	L;EJECT COMMAND OUT	30
MB−9,53−31	31	L;REW COMMAND OUT	31
MB−9,53−32	32	L;PLAY COMMAND OUT	32
MB−9,53−33	33	L;FF COMMAND OUT	33
MB−9,53−34	34	GND	34

CN104

PD−14,164−11	1	GND	0
OPEN	2	REMOTE CTL IN(G)	96
MB−18,143−6	3	REMOTE CTL IN(X)	2
MB−18,126−1	4	L;DRUM LOCK IN	1
PD−14,164−3	5	+9V IN	9
MB−18,126−3	6	SYNCHRONIZE OUT	3
MB−18,126−2	7	L;CAPSTAN LOCK IN	2
NC	8	——	

CN101

+9V OUT	1		
L;FF COMMAND IN	2		
L;FWD COMMAND IN	3		
L;REW COMMAND IN	4		
L;EJECT COMMAND IN	5		
L;STOP COMMAND IN	6		
L;PAUSE COMMAND IN	7		
L;REC COMMAND IN	8		
L;CUT IN COMMAND IN	9		
L;EDIT COMMAND IN	10		
L;CUT OUT COMMAND IN	11		
L;FF STS OUT	12		
L;FWD STS OUT	13		
L;REW STS OUT	14		
L;STANDBY STS OUT	15		
L;STOP STS OUT	16		
L;PAUSE STS 1 OUT	17		
L;REC STS OUT	18		
L;INSERT OUT	19		
L;VIDEO INSERT IN	20		
L;AUDIO CH−1 INSERT IN	21		
L;AUDIO CH−2 INSERT IN	22		
L;REVERSE IN	23		
SPEED A IN	24		
SPEED B IN	25		
REMOTE CTL OUT	26		
L;DRUM LOCK OUT	27		
L;CAPSTAN LOCK OUT	28		
SYNCHRONIZE IN	29		
——	30		
H;NORMAL FWD IN	31		
L;PAUSE STS 2 OUT	32		
L;SEARCH COMMAND IN	33		
——	34		
GND	35		
GND	36		

CN102

GND	1		
X MIT −	2		
RCV+	3		
GND	4		
——	5		
GND	6		
X MIT +	7		
RCV−	8		
GND	9		

CN105

GND	1		
——	2		
HOURS METER	3		

CN101 REMOTE 2 — EXT VIEW

CN102 REMOTE 1 — EXT VIEW

TM201 HOURS METER

DRUM ASSY H204 — **SR-14**

ROTARY ERASE — CH−B / CH−A

VIDEO R/P

ROTARY TRANSE

CN91

NC	1	GND	7
MB−18,126−7	2	H;RE CH−A MUTE IN	94
MB−18,127−12	3	RE 5.35 MHz OUT (G)	
MB−18,127−11	4	RE 5.35 MHz OUT (X)	2
MB−18,126−8	5	H;RE CH−B MUTE IN	8

CN92

SR−14,2	1	CH−A RE OUT (X)	89
SR−14,1	2	CH−A RE OUT (G)	2
SR−14, 4	3	CH−B RE OUT (X)	2
SR−14, 3	4	CH−B RE OUT (G)	80
NC	5	GND	

CN93

PD−14,164−8	1	REG +12V IN	2
PD−14,163−1	2	GND	0
NC	3	——	
PD−14,163−2	4	GND	0
PD−14,164−9	5	REG+12V IN	2

CN94

MB−18,127−9	1	REC CHROMA RF IN (X)	2
MB−18,127−10	2	REC CHROMA RF IN (G)	92
MB−18,126−4	3	L;REC AMP EN IN	4
MB−18,127−7	4	REC Y RF IN (X)	2
MB−18,127−8	5	REC Y RF IN (G)	90
NC	6	L;CH−A PB AMP EN OUT	
MB−18,126−5	7	L;CH−A PB AMP EN IN	9
MB−18,126−6	8	L;CH−B PB AMP EN IN	6

CN95

NC	1	——	
NC	2	——	
NC	3	——	
NC	4	——	
NC	5	——	

CN96

H204	1	CH−A VIDEO HEAD(X)	2
H204	2	CH−A VIDEO HEAD(Y)	9
H204	3	CH−A VIDEO HEAD(G)	89
H204	4	CH−B VIDEO HEAD(X)	2
H204	5	CH−B VIDEO HEAD(Y)	4
H204	6	CH−B VIDEO HEAD(G)	82

CN97

NC	1	GND	
MB−18,123−2	2	CH−A PB RF OUT(X)	90
MB−18,123−3	3	CH−A PB RF OUT(G)	
MB−18,123−1	4	H;DT ON IN	1
MB−18,123−4	5	CH−B PB RF OUT(X)	2
MB−18,123−5	6	CH−B PB RF OUT(G)	99

RP-18

TO CN182/MB−18140P FLAT CABLE)

MB−18,145−3
MB−18,145−6
MB−18,147−10
MB−18,147−11

REC — PB

RV203 20K X2 — RV204 20K X2

CN3

MB−18,133−3	1	CH−1 PB LEVEL (X) OUT	2
MB−18,133−2	2	CH−1 PB LEVEL (Y) OUT	9
MB−18,133−1	3	CH−1 PB LEVEL (G) OUT	80
MB−18,133−6	4	CH−1 REC LEVEL (X) OUT	2
MB−18,133−5	5	CH−1 REC LEVEL (Y) OUT	9
MB−18,133−4	6	CH−1 REC LEVEL (G) OUT	82
MB−18,134−3	7	CH−2 PB LEVEL (X) OUT	2
MB−18,134−2	8	CH−2 PB LEVEL (Y) OUT	9
MB−18,134−1	9	CH−2 PB LEVEL (G) OUT	84
MB−18334−6	10	CH−2 REC LEVEL (X) OUT	2
MB−18334−5	11	CH−2 REC LEVEL (Y) OUT	9
MB−18,134−4	12	CH−2 REC LEVEL(G) OUT	86

CH−1 PB LEVEL — CH−1 REC LEVEL — CH−2 PB LEVEL — CH−2 REC LEVEL

PL206 PL205 — ME203 AUDIO CH−2

PL204 PL203 — ME202 AUDIO CH−1

PL202 PL201 — ME201 VIDEO/RF

CN2

NC	1	——	
SY−71,42−42	2	H;SKEW SOL ON IN	6
NC	3	——	
MS−5(D), (6)	6	H;SKEW SOL ON OUT	6

CN1

MB−9,63−3	1	L;DT ON 1 OUT	1
MB−9,63−2	2	L;DT ON 2 OUT	2
MB−9,63−4	3	L;REMOTE(2)OUT	3
MB−9,63−1	4	L;REMOTE(1)OUT	4
MB−9,59−7	5	L;AUTO OFF LAMP ON IN	7

LP-33

REMOTE SELECT — **PR-33**

REMOTE/LOCAL SW — **MS-5(E)**

WARNING LAMP — **LMP-1**

4−4	4−4	MB−18,146−8	1
	4−2	MB−18,147−8	4
	4−3	MB−18,146−7	6
	4−5	MB−18,146−9	2
	4−6	MB−18,146−10	7

TO FRAME(1/2)

FRAME(2/2)

FRAME(2/2)

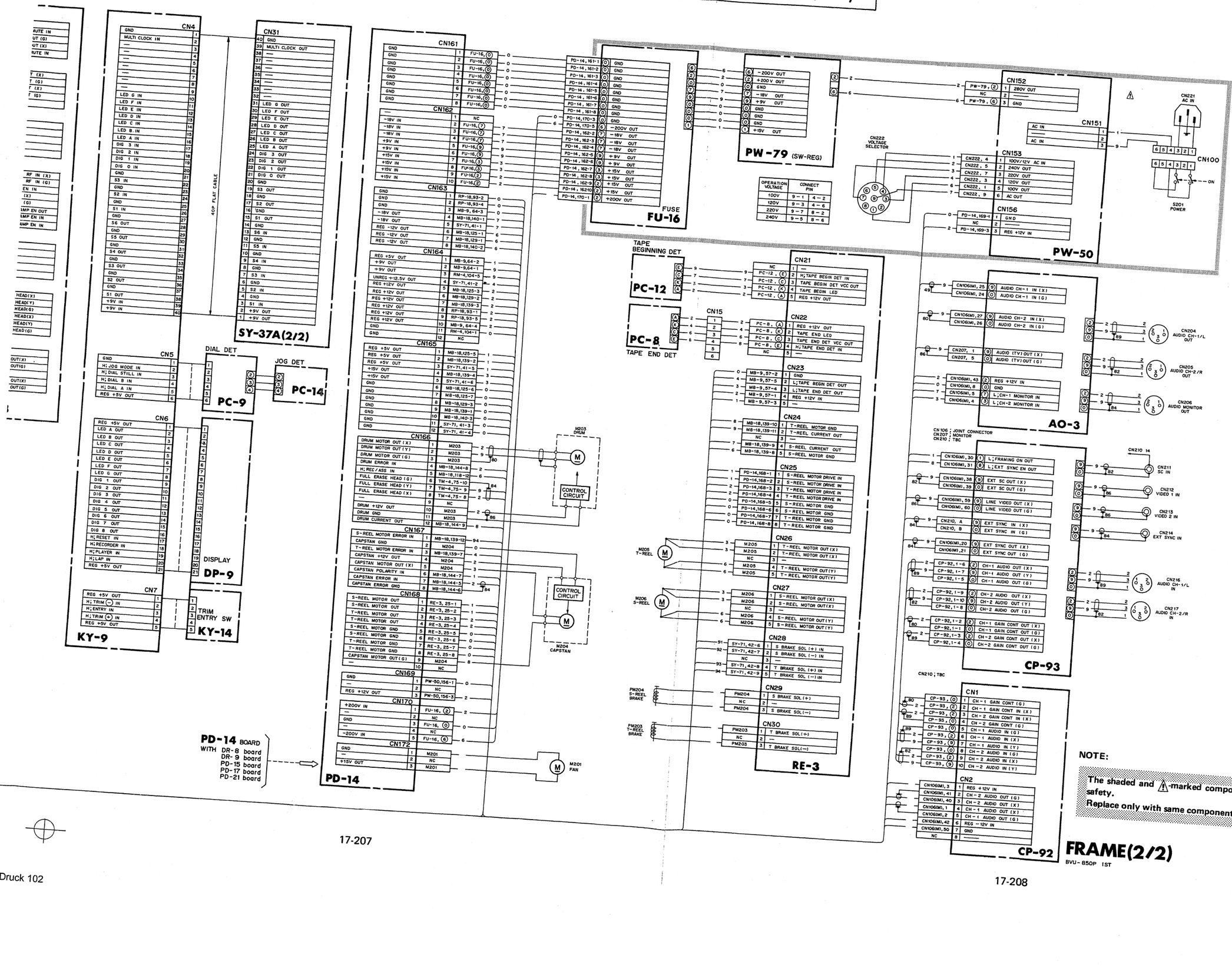

NOTE:

The shaded and ⚠-marked components are critical to safety.
Replace only with same components as specified.

FRAME(1/2) FRA

FRAME(1/2)

S/N; 10391 and higher

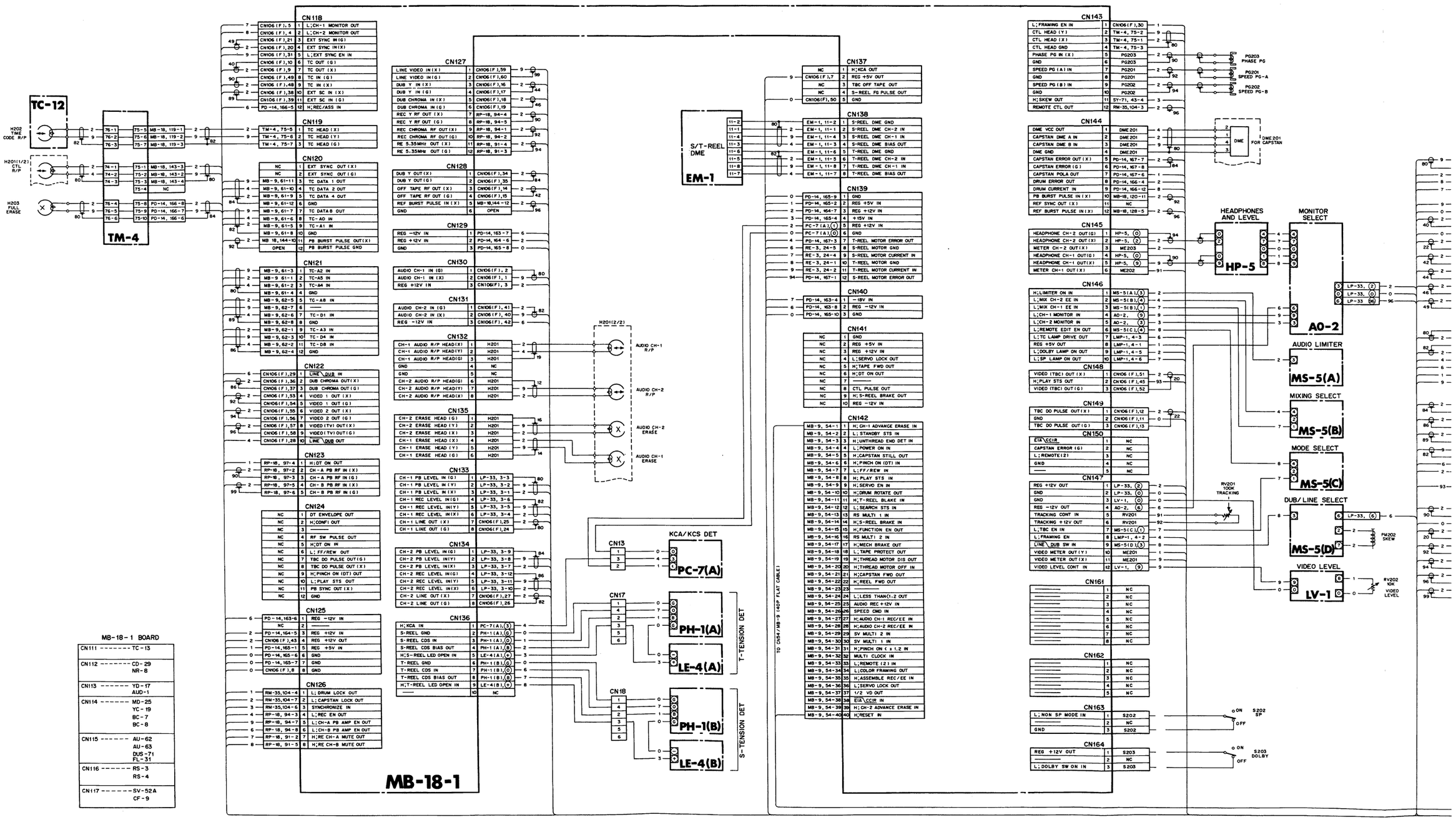

MB-18-1 BOARD

CN111	TC-13
CN112	CD-29 NR-8
CN113	YD-17 AUD-1
CN114	MD-25 YC-19 BC-7 BC-8
CN115	AU-62 AU-63 DUS-71 FL-31
CN116	RS-3 RS-4
CN117	SV-52A CF-9

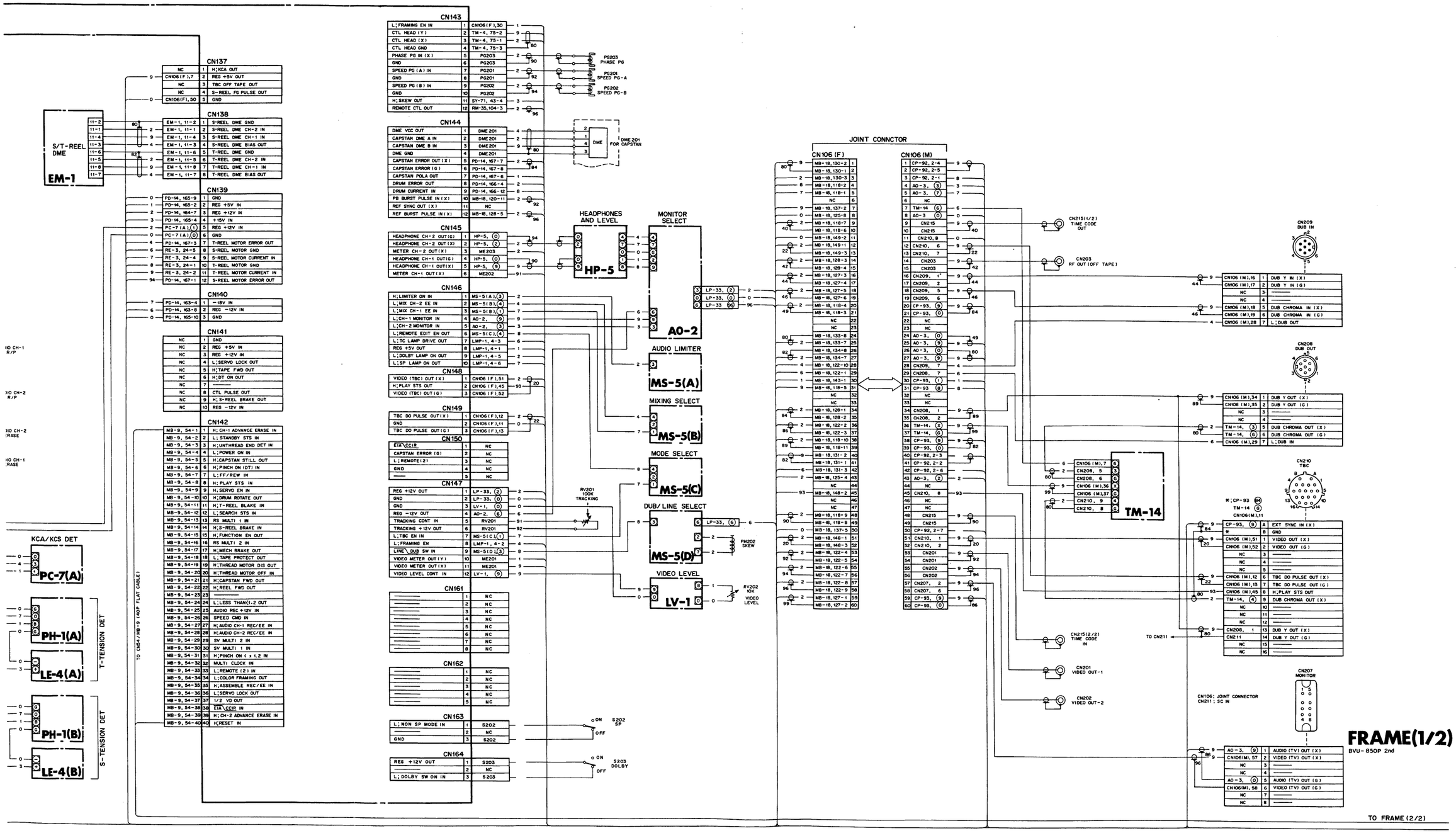
S/T-REEL DME
EM-1
CN137
NC 1 H;KCA OUT
CN106(F),7 2 REG +5V OUT
NC 3 TBC OFF TAPE OUT
NC 4 S-REEL FG PULSE OUT
CN106(F),50 5 GND
CN138
EM-1, 11-2 1 S-REEL DME GND
EM-1, 11-1 2 S-REEL DME CH-2 IN
EM-1, 11-4 3 S-REEL DME CH-1 IN
EM-1, 11-3 4 S-REEL DME BIAS OUT
EM-1, 11-6 5 T-REEL DME GND
EM-1, 11-5 6 T-REEL DME CH-2 IN
EM-1, 11-8 7 T-REEL DME CH-1 IN
EM-1, 11-7 8 T-REEL DME BIAS OUT
CN139
PD-14, 165-9 1 GND
PD-14, 165-2 2 REG +5V IN
PD-14, 164-7 3 REG +12V IN
PD-14, 165-4 4 +15V IN
PC-7(A),(I) 5 REG +12V IN
PC-7(A),(G) 6 GND
PD-14, 167-3 7 T-REEL MOTOR ERROR OUT
RE-3, 24-5 8 S-REEL MOTOR GND
RE-3, 24-4 9 S-REEL MOTOR CURRENT IN
RE-3, 24-1 10 T-REEL MOTOR GND
RE-3, 24-2 11 T-REEL MOTOR CURRENT IN
PD-14, 167-1 12 S-REEL MOTOR ERROR OUT
CN140
PD-14, 163-4 1 -18V IN
PD-14, 163-8 2 REG -12V IN
PD-14, 165-10 3 GND
CN141
NC 1 GND
NC 2 REG +5V IN
NC 3 REG +12V IN
NC 4 L;SERVO LOCK OUT
NC 5 H;TAPE FWD OUT
NC 6 H;DT ON OUT
NC 7
NC 8 CTL PULSE OUT
NC 9 H;S-REEL BRAKE OUT
NC 10 REG -12V IN
CN142
MB-9, 54-1 1 H;CH-1 ADVANCE ERASE IN
MB-9, 54-2 2 L;STANDBY STS IN
MB-9, 54-3 3 H;UNTHREAD END DET IN
MB-9, 54-4 4 L;POWER ON IN
MB-9, 54-5 5 H;CAPSTAN STILL OUT
MB-9, 54-6 6 H;PINCH ON (DT) IN
MB-9, 54-7 7 L;FF/REW IN
MB-9, 54-8 8 H;PLAY STS IN
MB-9, 54-9 9 H;SERVO EN IN
MB-9, 54-10 10 H;DRUM ROTATE OUT
MB-9, 54-11 11 H;T-REEL BLAKE IN
MB-9, 54-12 12 L;SEARCH STS IN
MB-9, 54-13 13 RS MULTI 1 IN
MB-9, 54-14 14 H;S-REEL BRAKE IN
MB-9, 54-15 15 H;FUNCTION EN OUT
MB-9, 54-16 16 RS MULTI 2 IN
MB-9, 54-17 17 H;MECH BRAKE OUT
MB-9, 54-18 18 L;TAPE PROTECT OUT
MB-9, 54-19 19 H;THREAD MOTOR DIS OUT
MB-9, 54-20 20 H;THREAD MOTOR OFF IN
MB-9, 54-21 21 H;CAPSTAN FWD OUT
MB-9, 54-22 22 H;REEL FWD OUT
MB-9, 54-23 23
MB-9, 54-24 24 L;LESS THAN(1.2 OUT
MB-9, 54-25 25 AUDIO REC +12V IN
MB-9, 54-26 26 SPEED CMD IN
MB-9, 54-27 27 H;AUDIO CH-1 REC/EE IN
MB-9, 54-28 28 H;AUDIO CH-2 REC/EE IN
MB-9, 54-29 29 SV MULTI 2 IN
MB-9, 54-30 30 SV MULTI 1 IN
MB-9, 54-31 31 H;PINCH ON (x 1.2 IN
MB-9, 54-32 32 MULTI CLOCK IN
MB-9, 54-33 33 L;REMOTE (2) IN
MB-9, 54-34 34 L;COLOR FRAMING OUT
MB-9, 54-35 35 H;ASSEMBLE REC/EE IN
MB-9, 54-36 36 L;SERVO LOCK OUT
MB-9, 54-37 37 1/2 VD OUT
MB-9, 54-38 38 EIA CCIR IN
MB-9, 54-39 39 H;CH-2 ADVANCE ERASE IN
MB-9, 54-40 40 H;RESET IN
TO CN54/MB-9 140P FLAT CABLE)
KCA/KCS DET
PC-7(A)
PH-1(A)
LE-4(A)
T-TENSION DET
PH-1(B)
LE-4(B)
S-TENSION DET
CN143
L;FRAMING EN IN 1 CN106(F),30
CTL HEAD (Y) 2 TM-4, 75-2
CTL HEAD (X) 3 TM-4, 75-1
CTL HEAD GND 4 TM-4, 75-3
PHASE PG IN (X) 5 PG203
GND 6 PG203
SPEED PG (A) IN 7 PG201
GND 8 PG201
SPEED PG (B) IN 9 PG202
GND 10 PG202
H;SKEW OUT 11 SY-71, 43-4
REMOTE CTL OUT 12 RM-35,104-3
PG203 PHASE PG
PG201 SPEED PG-A
PG202 SPEED PG-B
CN144
DME VCC OUT 1 DME 201
CAPSTAN DME A IN 2 DME 201
CAPSTAN DME B IN 3 DME 201
DME GND 4 DME 201
CAPSTAN ERROR OUT (X) 5 PD-14, 167-7
CAPSTAN ERROR (G) 6 PD-14, 167-8
CAPSTAN POLA OUT 7 PD-14, 167-6
DRUM ERROR OUT 8 PD-14, 166-4
DRUM CURRENT IN 9 PD-14, 166-12
PB BURST PULSE IN (X) 10 MB-18, 120-11
REF SYNC OUT (X) 11 NC
REF BURST PULSE IN (X) 12 MB-18, 128-5
DME
DME 201 FOR CAPSTAN
CN145
HEADPHONE CH-2 OUT(G) 1 HP-5, (O)
HEADPHONE CH-2 OUT(X) 2 HP-5, (2)
METER CH-2 OUT(X) 3 ME203
HEADPHONE CH-1 OUT(G) 4 HP-5, (O)
HEADPHONE CH-1 OUT(X) 5 HP-5, (9)
METER CH-1 OUT(X) 6 ME202
HEADPHONES AND LEVEL
HP-5
CN146
H;LIMITER ON IN 1 MS-5(A),(3)
L;MIX CH-2 EE IN 2 MS-5(B),(4)
L;MIX CH-1 EE IN 3 MS-5(B),(1)
L;CH-1 MONITOR IN 4 AO-2, (9)
L;CH-2 MONITOR IN 5 AO-2, (3)
L;REMOTE EDIT EN OUT 6 MS-5(C),(4)
L;TC LAMP DRIVE OUT 7 LMP-1, 4-3
REG +5V OUT 8 LMP-1, 4-1
L;DOLBY LAMP ON OUT 9 LMP-1, 4-5
L;SP LAMP ON OUT 10 LMP-1, 4-6
MONITOR SELECT
LP-33, (2)
LP-33, (O)
LP-33, (6)
A0-2
AUDIO LIMITER
MS-5(A)
MIXING SELECT
MS-5(B)
MODE SELECT
MS-5(C)
DUB/LINE SELECT
LP-33, (6)
PM202 SKEW
MS-5(D)
VIDEO LEVEL
RV202 10K VIDEO LEVEL
LV-1
CN148
VIDEO (TBC) OUT (X) 1 CN106 (F),51
H;PLAY STS OUT 2 CN106 (F),45
VIDEO (TBC) OUT (G) 3 CN106 (F),52
CN149
TBC DO PULSE OUT(X) 1 CN106(F),12
GND 2 CN106(F),11
TBC DO PULSE OUT(G) 3 CN106(F),13
CN150
EIA CCIR 1 NC
CAPSTAN ERROR (G) 2 NC
L;REMOTE(2) 3 NC
GND 4 NC
5 NC
CN147
REG +12V OUT 1 LP-33, (2)
GND 2 LP-33, (O)
GND 3 LV-1, (O)
REG -12V OUT 4 AO-2, (6)
TRACKING CONT IN 5 RV201
TRACKING +12V OUT 6 RV201
L;TBC EN IN 7 MS-5(C),(1)
L;FRAMING EN 8 LMP-1, 4-2
LINE/DUB SW IN 9 MS-5(D),(3)
VIDEO METER OUT(Y) 10 ME201
VIDEO METER OUT(X) 11 ME201
VIDEO LEVEL CONT IN 12 LV-1, (9)
RV201 10OK TRACKING
CN161
1 NC
2 NC
3 NC
4 NC
5 NC
6 NC
7 NC
8 NC
CN162
1 NC
2 NC
3 NC
4 NC
5 NC
CN163
L;NON SP MODE IN 1 S202
2 NC
GND 3 S202
S202 SP
ON OFF
CN164
REG +12V OUT 1 S203
2 NC
L;DOLBY SW ON IN 3 S203
S203 DOLBY
ON OFF
JOINT CONNCTOR
CN106 (F)
MB-18, 130-2 1
MB-18, 130-1 2
MB-18, 130-3 3
MB-18, 118-2 4
MB-18, 118-1 5
NC 6
MB-18, 137-2 7
MB-18, 125-8 8
MB-18, 118-7 9
MB-18, 118-6 10
MB-18, 149-2 11
MB-18, 149-1 12
MB-18, 149-3 13
MB-18, 128-3 14
MB-18, 128-4 15
MB-18, 127-3 16
MB-18, 127-4 17
MB-18, 127-5 18
MB-18, 127-6 19
MB-18, 118-4 20
MB-18, 118-3 21
NC 22
NC 23
MB-18, 133-8 24
MB-18, 133-7 25
MB-18, 134-8 26
MB-18, 134-7 27
MB-18, 122-10 28
MB-18, 122-1 29
MB-18, 143-1 30
MB-18, 118-5 31
NC 32
NC 33
MB-18, 128-1 34
MB-18, 128-2 35
MB-18, 122-2 36
MB-18, 122-3 37
MB-18, 118-10 38
MB-18, 118-11 39
MB-18, 131-2 40
MB-18, 131-1 41
MB-18, 125-4 43
NC 44
MB-18, 148-2 45
NC 46
NC 47
MB-18, 118-9 48
MB-18, 118-8 49
MB-18, 137-5 50
MB-18, 148-1 51
MB-18, 148-3 52
MB-18, 122-4 53
MB-18, 122-5 54
MB-18, 122-6 55
MB-18, 122-7 56
MB-18, 122-8 57
MB-18, 122-9 58
MB-18, 127-1 59
MB-18, 127-2 60
CN106 (M)
CP-92, 2-4 1
CP-92, 2-5 2
CP-92, 2-1 3
AO-3, (3) 4
AO-3, (7) 5
NC 6
TM-14 (6) 7
AO-3 (O) 8
CN215 9
CN215 10
CN210, 8 11
CN210, 6 12
CN210, 7 13
CN203 14
CN209, 1 15
CN209, 2 16
CN209, 5 17
CN209, 6 18
CP-93, (9) 19
CP-93, (O) 20
NC 21
NC 22
AO-3, (O) 23
AO-3, (9) 24
AO-3, (O) 25
AO-3, (9) 26
CN208, 7 27
CN209, 7 28
CN208, 7 29
CP-93, (1) 30
CP-93 (8) 31
NC 32
NC 33
CN208, 1 34
CN208, 2 35
TM-14, (X) 36
TM-14, (G) 37
CP-93, (9) 38
CP-93, (O) 39
CP-92, 2-3 40
CP-92, 2-2 41
CP-92, 2-6 42
AO-3, (2) 43
NC 44
CN210, 8 45
NC 46
NC 47
CN215 48
CN215 49
CP-92, 2-7 50
CN210, 1 51
CN210, 2 52
CN201 53
CN201 54
CN202 55
CN202 56
CN207, 2 57
CN207, 6 58
CP-93, (9) 59
CP-93, (O) 60
CN215(1/2) TIME CODE OUT
CN203 RF OUT (OFF TAPE)
CN215(2/2) TIME CODE IN
CN201 VIDEO OUT-1
CN202 VIDEO OUT-2
CN209 DUB IN
CN106(M),16 1 DUB Y IN (X)
CN106(M),17 2 DUB Y IN (G)
NC 3
NC 4
CN106(M),18 5 DUB CHROMA IN (X)
CN106(M),19 6 DUB CHROMA IN (G)
CN106(M),28 7 L;DUB OUT
CN208 DUB OUT
CN106(M),34 1 DUB Y OUT (X)
CN106(M),35 2 DUB Y OUT (G)
NC 3
NC 4
TM-14, (3) 5 DUB CHROMA OUT (X)
TM-14, (G) 6 DUB CHROMA OUT (G)
CN106(M),29 7 L;DUB IN
CN106(M),7 6
CN208, 5 3
CN208, 6 G
CN106(M),36 X
CN106(M),37 G
CN210, 9 4
CN210, 8 6
TM-14
CN210 TBC
*;CP-93 (9A)
TM-14 (6)
CN106(M),11
CP-93, (9) A EXT SYNC IN (X)
* B GND
CN106(M),51 1 VIDEO OUT (X)
CN106(M),52 2 VIDEO OUT (G)
NC 3
NC 4
NC 5
CN106(M),12 6 TBC DO PULSE OUT (X)
CN106(M),13 7 TBC DO PULSE OUT (G)
CN106(M),45 8 H;PLAY STS OUT
TM-14, (4) 9 DUB CHROMA OUT (X)
NC 10
NC 11
NC 12
CN208, 1 13 DUB Y OUT (X)
CN211 14 DUB Y OUT (G)
NC 15
NC 16
TO CN211
CN207 MONITOR
CN106; JOINT CONNECTOR
CN211; SC IN
AO-3, (9) 1 AUDIO (TV) OUT (X)
CN106(M), 57 2 VIDEO (TV) OUT (X)
NC 3
NC 4
AO-3, (O) 5 AUDIO (TV) OUT (G)
CN106(M), 58 6 VIDEO (TV) OUT (G)
NC 7
NC 8
FRAME(1/2)
BVU-850P 2nd
TO FRAME(2/2)

FRAME(2/2) FRAME(2/2)

FRAME(2/2)

S/N; 10391 and higher

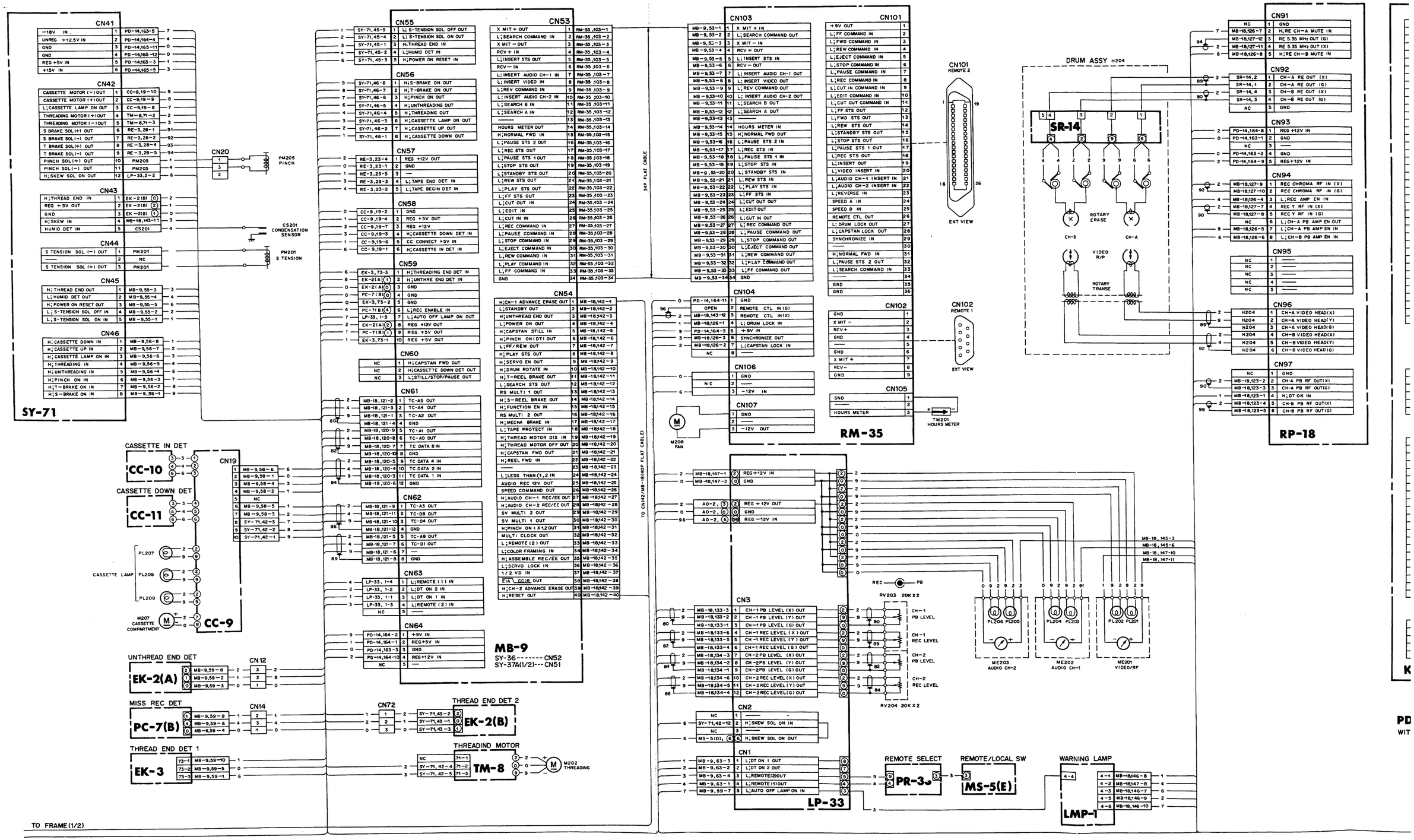

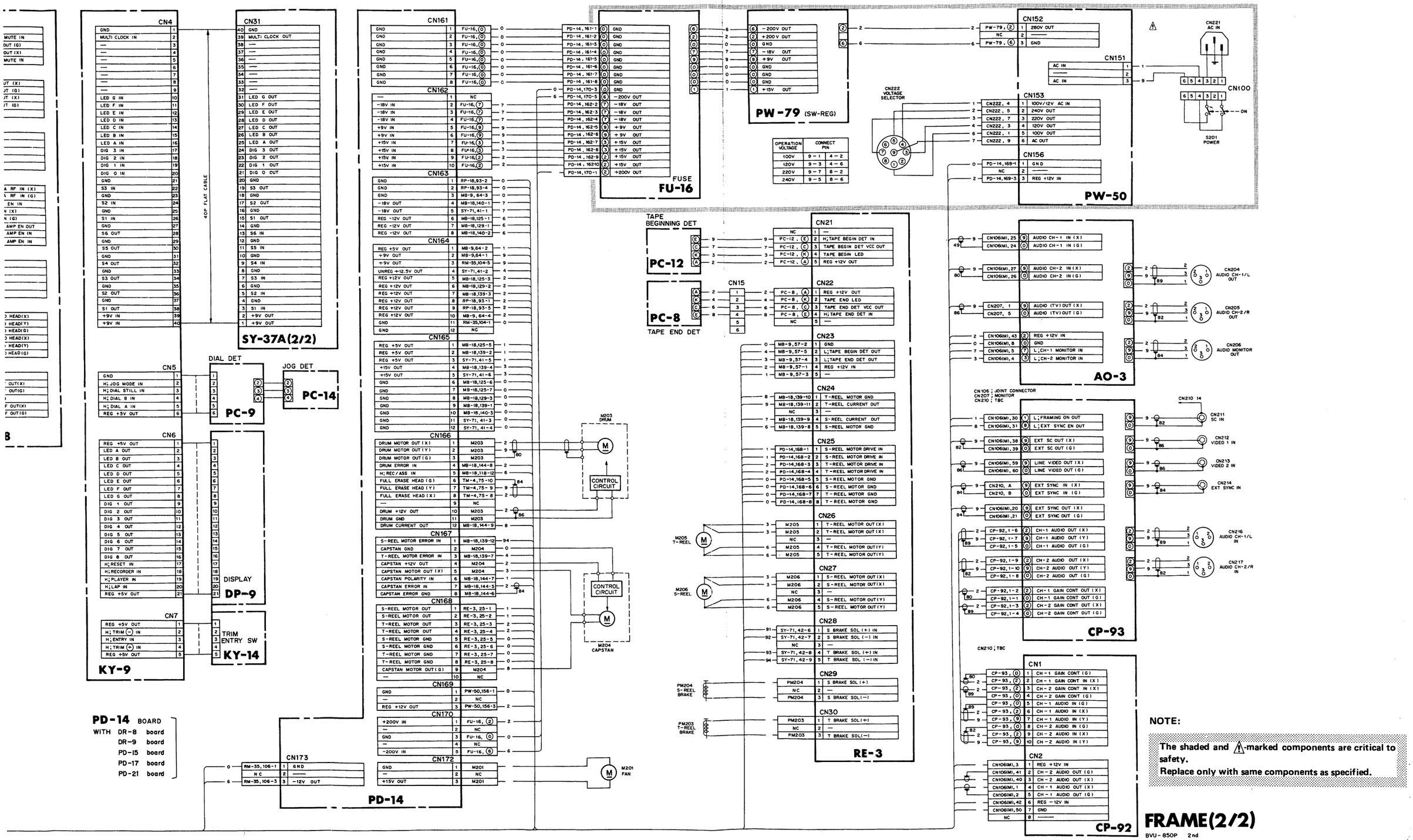

PD-14 BOARD
WITH DR-8 board
DR-9 board
PD-15 board
PD-17 board
PD-21 board

NOTE:

The shaded and ⚠-marked components are critical to safety.
Replace only with same components as specified.

FRAME(2/2)
BVU-850P 2nd

SECTION 18
PRINTED CIRCUIT BOARDS

CIRCUIT FUNCTION OF THE PRINTED CIRCUIT BOARD

The circuit information is provided below.

SYSTEM	CIRCUIT BOARD	CIRCUIT FUNCTION
VIDEO	MD-25	. Y/C Modulator
	YC-19	. Y/C SEP/PHASE Equalize
	BC-7	. Control timing gen.
	BC-8	. Control timing gen.
	RP-18	. RF REC/PB Amplifier
	YD-17	. Y Demodulator
	FL-36	. HPF
	AUD-1	. Audio FM Detector
	CD-29	. Chroma Demodulator/Enhancer
	NR-8	. Noise reduction
AUDIO	CP-93	. Audio input level select
	CP-92	. Audio input amplifier
	AU-62	. Audio PB/REC Amplifier
	DUS-71(A),(B)	. VAR,Inductor
	AU-63	. Audio head amp/bias/erase OSC.
	FL-31	. Noise Filter
	AO-3	. Audio output amplifier
	AO-2	. Monitor select
	HP-5	. Headphones jack/level control
SERVO	SV-52A	. Drum/Capstan PWM Servo
	CF-9	. CTL REC/PB AMP/Color framing
	RS-3	. Reel servo
	RS-4	. Tape tension servo
	PD-14	. Regulator
	DR-9(1),(2)	. Reel motor driver
	PD-15(1),(2)	. REG +12V/+5V
	PD-17	. UNREG
	PD-21	. REG -12V
	DR-8	. Capstan motor driver
POWER	PW-50	. AC Rectifier
	PW-79	. Switching regulator
	FU-16	. Fuse
KEY	KY-9	. Function key
	KY-14	. TRIM/ENTRY sw
	DP-9	. Display
	PC-9	. Dial detector
	PC-14	. JOG Detector
TIME CODE	TC-13	. Time code REC/PB amplifier CTL Counter Servo ref sync selector
SYSTEM CONTROL	SY-36	. Function system control
	SY-37A	. Micro processor
	SY-71	. Motor/solenoid driver
	EK-2(B)	. Thread end detector
	TM-8	. Thread motor
	LP-33	. Audio REC/PB Level control
	PR-33	. Remote select
	MS-5(E)	. Remote/local sw
	LMP-1	. Warning lamp
	CC-9	. Cassette in/down detector
	CC-10	. Cassette in/down detector
	CC-11	. Cassette in/down detector
	RM-4	. Remote connector
	RM-35	. Remote connector/DC Fan
	TM-14	. Terminal
	RE-3	. T/S-REEL Motor
	PC-12	. Tape begin/end detector
	PC-8	. Tape begin/end detector
MOTHER BOARD and OTHERS	MB-9	. Mother board
	EK-3	. Thread end detector
	EK-2(A)	. Unthread end detector
	PC-7(B)	. Miss rec detector
	MB-18-1	. Mother board
	PC-7(A)	. KCA/KCS Detector
	PH-1(A),(B)	. S/T-Reel
	LE-4(A),(B)	. Tension detector
	EM-1	. S/T-REEL DME
	TM-4	. CTL R/P, TC R/P Head
	TC-12	. CTL R/P, TC R/P Head
	MS-5(A),(B),(C),(D)	. System sw
	LV-1	. Video level VR

MD-25; Y/C MODULATOR

S/N; UP TO 10390

CN1	B - 8	RV1	B - 4
CN501	H - 6	RV5	D - 4
CN502	H - 6	RV6	D - 4
CN503	H - 6	RV7	D - 4
CN504	H - 7	RV8	D - 5
		RV9	D - 7
D1	B - 7	RV201	F - 3
D2	B - 7	RV202	F - 3
D3	A - 7	RV203	H - 1
D4	A - 7	RV204	E - 4
D5	B - 1	RV205	H - 7
D6	B - 1	RV206	F - 5
D7	B - 1	RV207	E - 1
D8	B - 1	RV208	G - 1
D10	D - 8	RV301	D - 2
D11	D - 8	RV302	D - 2
D12	D - 7	RV303	D - 2
D13	B - 5	RV304	D - 3
D14	C - 3	RV501	E - 6
D201	H - 1	RV502	F - 6
D202	H - 1		
D203	H - 4	S1	B - 1
D204	G - 8		
D301	C - 1	T201	H - 3
D302	C - 2		
D303	D - 1	TP1	B - 8
		TP2	C - 6
DL1	B - 5	TP3	A - 4
DL201	G - 6	TP4	B - 4
		TP5	C - 2
E1	C - 2	TP7	C - 3
E2	E - 2	TP9	C - 4
E3	H - 2	TP10	C - 4
E4	A - 4	TP11	E - 5
E5	E - 6	TP12	D - 6
E6	G - 4	TP13	E - 8
		TP201	G - 2
IC1	B - 7	TP202	F - 4
IC2	C - 4	TP203	G - 3
IC3	B - 2	TP204	G - 2
IC4	B - 2	TP205	G - 3
IC5	D - 5	TP206	F - 1
IC6	D - 7	TP207	G - 1
IC201	G - 3	TP208	H - 2
IC202	F - 2	TP209	H - 8
IC203	G - 4	TP210	E - 3
IC204	E - 2	TP211	D - 1
IC205	G - 6	TP212	G - 6
IC206	G - 7	TP213	G - 5
IC207	G - 5	TP214	H - 4
IC501	F - 7	TP301	D - 3
		TP302	C - 4
LV201	G - 1	TP501	F - 5
LV301	D - 4	TP502	F - 5
Q1	B - 7	X201	H - 3
Q2	A - 7		
Q3	A - 6		
Q4	B - 1		
Q5	C - 1		
Q6	C - 5		
Q7	B - 6		
Q8	B - 3		
Q9	B - 3		
Q16	D - 4		
Q17	D - 7		
Q18	E - 6		
Q19	D - 6		
Q20	D - 6		
Q21	B - 5		
Q22	A - 5		
Q23	A - 5		
Q24	E - 7		
Q201	H - 2		
Q202	H - 3		
Q203	F - 5		
Q204	G - 7		
Q205	G - 5		
Q206	G - 5		
Q207	F - 7		
Q208	H - 6		
Q209	F - 1		
Q210	F - 4		
Q211	H - 5		
Q212	H - 5		
Q214	G - 1		
Q301	C - 2		
Q302	C - 2		
Q303	C - 2		
Q304	C - 2		
Q305	C - 2		
Q306	C - 2		
Q307	C - 3		
Q308	C - 3		
Q311	D - 3		
Q312	D - 2		
Q313	D - 2		
Q314	D - 2		
Q315	D - 2		
Q316	D - 3		
Q501	E - 8		
Q502	E - 7		

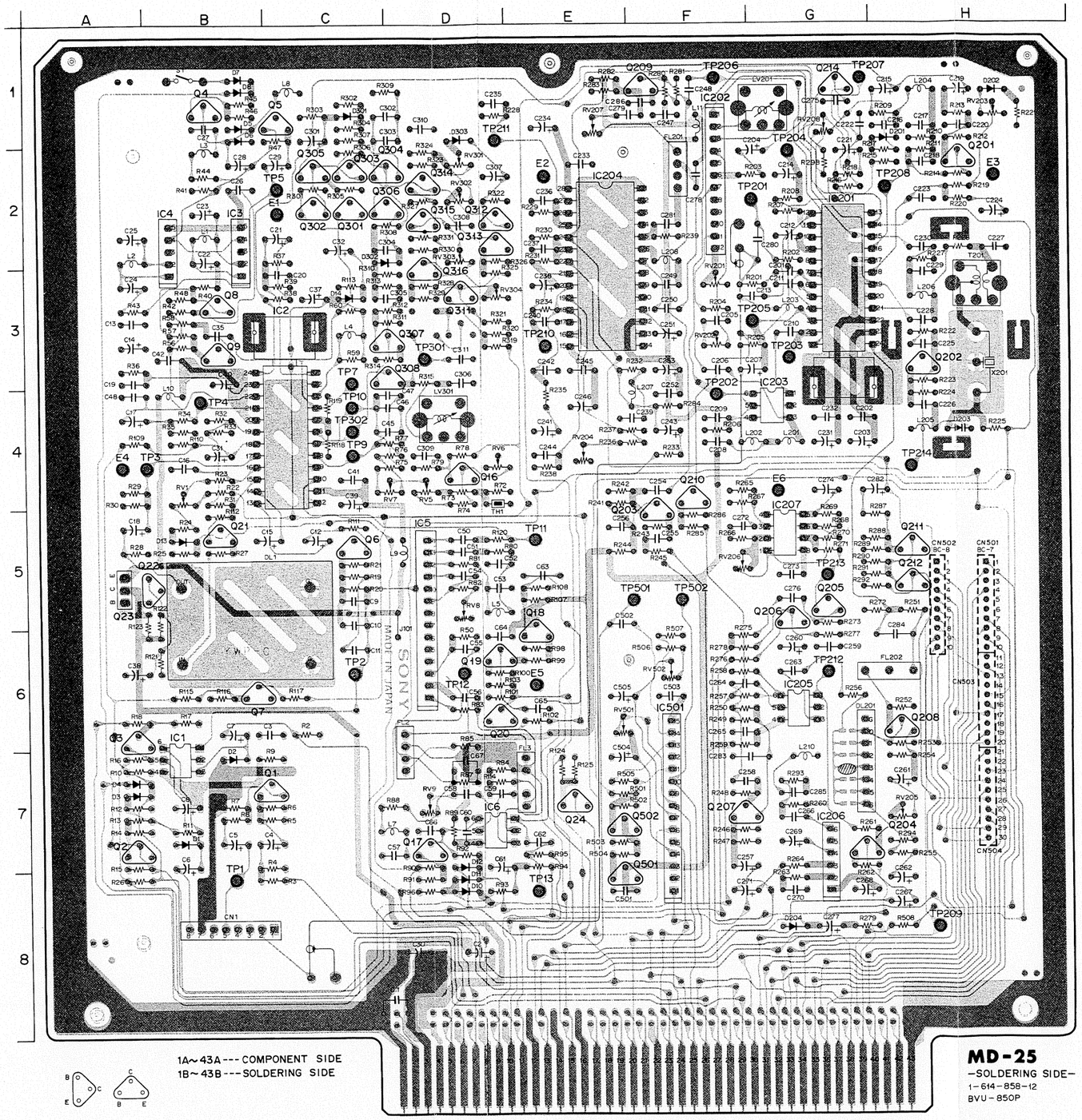

MD-25; Y/C MODULATOR

S/N; 10391 and higher

CN1	B - 8	RV1	B - 4	IC1	B - 7
CN501	H - 6	RV5	D - 4	IC2	C - 4
CN502	H - 6	RV6	D - 4	IC3	B - 2
CN503	H - 6	RV7	D - 4	IC4	B - 2
CN504	H - 7	RV8	D - 5	IC5	D - 5
		RV9	D - 7	IC6	D - 7
D1	B - 7	RV201	F - 3	IC201	G - 3
D2	B - 7	RV202	F - 3	IC202	F - 2
D3	A - 7	RV203	H - 1	IC203	G - 4
D4	A - 7	RV204	E - 4	IC204	E - 2
D5	B - 1	RV205	H - 7	IC205	G - 6
D6	B - 1	RV206	F - 5	IC206	G - 7
D7	B - 1	RV207	E - 1	IC207	G - 5
D8	B - 1	RV208	G - 1	IC501	F - 7
D10	D - 8	RV301	D - 2		
D11	D - 8	RV302	D - 2	LV201	G - 1
D12	D - 7	RV303	D - 2	LV301	D - 4
D13	B - 5	RV304	D - 3		
D14	C - 3	RV501	E - 6	Q1	B - 7
D201	H - 1	RV502	F - 6	Q2	A - 7
D202	H - 1			Q3	A - 6
D203	H - 4	S1	B - 1	Q4	B - 1
D204	G - 8			Q5	C - 1
D301	C - 1	T201	H - 3	Q6	C - 5
D302	C - 2			Q7	B - 6
D303	D - 1	TP1	B - 8	Q8	B - 3
		TP2	C - 6	Q9	B - 3
DL1	B - 5	TP3	A - 4	Q16	D - 4
DL201	G - 6	TP4	B - 4	Q17	D - 7
		TP5	C - 2	Q18	E - 6
E1	C - 2	TP7	C - 3	Q19	D - 6
E2	E - 2	TP9	C - 4	Q20	D - 6
E3	H - 2	TP10	C - 4	Q21	B - 5
E4	A - 4	TP11	E - 5	Q22	A - 5
E5	E - 6	TP12	D - 6	Q23	A - 5
E6	G - 4	TP13	E - 8	Q24	E - 7
		TP201	G - 2	Q201	H - 2
		TP202	F - 4	Q202	H - 3
		TP203	G - 3	Q203	F - 5
		TP204	G - 2	Q204	G - 7
		TP205	G - 3	Q205	G - 5
		TP206	F - 1	Q206	G - 5
		TP207	G - 1	Q207	F - 7
		TP208	H - 2	Q208	H - 6
		TP209	H - 8	Q209	F - 1
		TP210	E - 3	Q210	F - 4
		TP211	D - 1	Q211	H - 5
		TP212	G - 6	Q212	H - 5
		TP213	G - 5	Q214	G - 1
		TP214	H - 4	Q301	C - 2
		TP301	D - 3	Q302	C - 2
		TP302	C - 4	Q303	C - 2
		TP501	F - 5	Q304	C - 2
		TP502	F - 5	Q305	C - 2
				Q306	C - 2
		X201	H - 3	Q307	C - 3
				Q308	C - 3
				Q311	D - 3
				Q312	D - 2
				Q313	D - 2
				Q314	D - 2
				Q315	D - 2
				Q316	D - 3
				Q501	E - 8
				Q502	E - 7

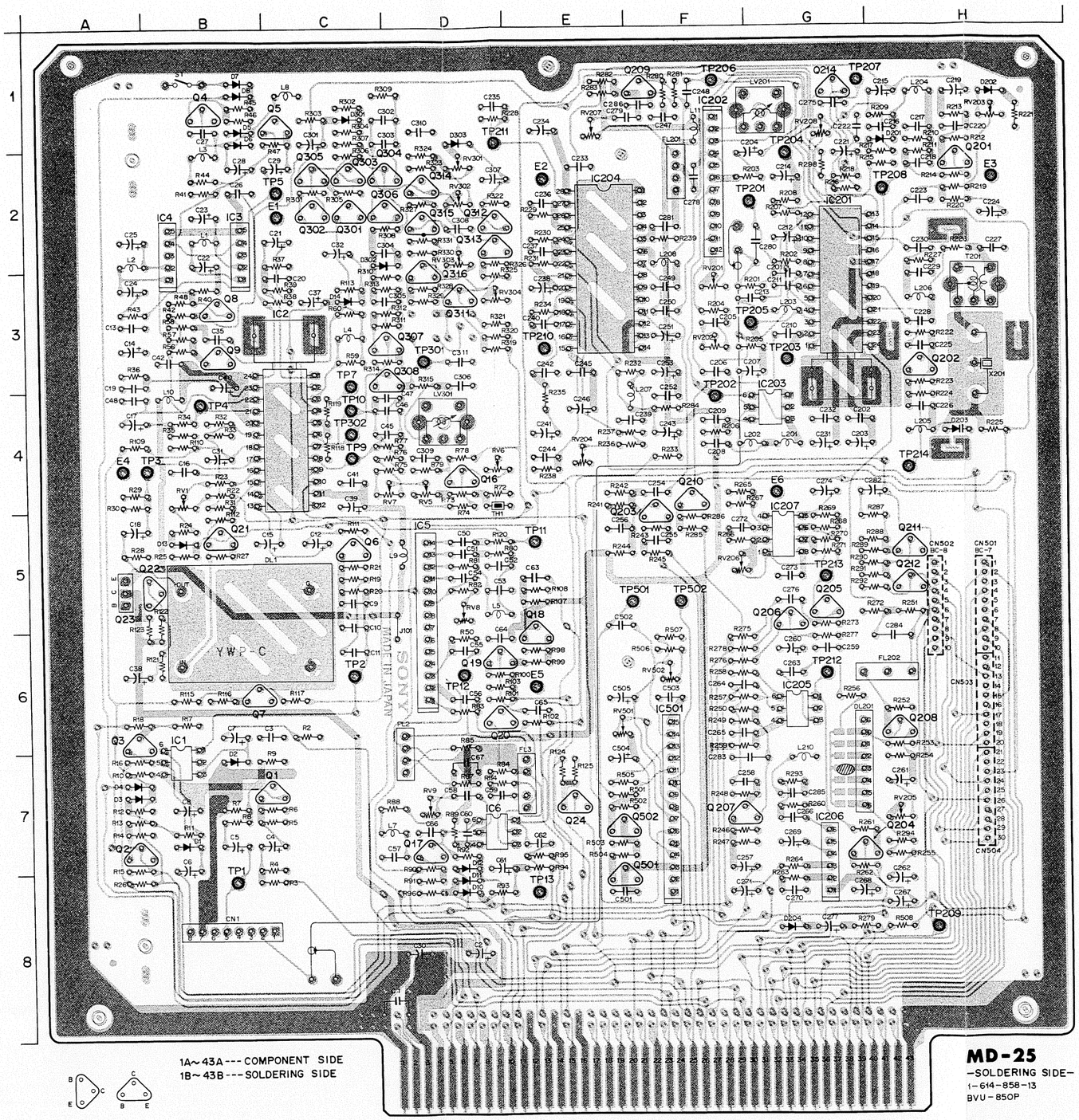

YC-19, BC-7, BC-8

YC-19; Y/C SEP/PHASE EQUALIZE
BC-7; CONTROL TIMING GEN.
BC-8; CONTROL TIMING GEN.

CN1	B - 7	RV1	A - 6
		RV101	B - 4
DL101	B - 4	RV201	E - 2
DL201	B - 3	RV202	C - 2
		RV203	C - 3
E1	A - 7	RV204	C - 5
E2	A - 6	RV205	C - 5
E101	B - 6	RV206	D - 4
E201	C - 2	RV207	D - 4
E202	D - 5	RV208	D - 6
FL1	A - 7	S201	D - 6
FL201	B - 7		
		TP1	A - 7
IC1	A - 5	TP2	B - 7
IC101	B - 4	TP101	B - 7
IC102	A - 4	TP201	D - 2
IC201	C - 3	TP202	D - 2
IC202	C - 5	TP203	D - 3
IC203	C - 6	TP204	E - 3
		TP205	D - 2
Q1	A - 7	TP206	C - 4
Q2	A - 7	TP207	C - 4
Q3	A - 7	TP208	D - 5
Q101	B - 7	TP209	D - 5
Q102	B - 7	TP210	C - 6
Q103	A - 4	TP211	C - 7
Q201	B - 3	TP212	A - 4
Q202	C - 3		
Q203	B - 3		
Q204	B - 3		
Q205	E - 3		
Q206	D - 3		
Q207	D - 3		
Q208	E - 3		
Q209	C - 2		
Q210	D - 2		
Q211	D - 2		
Q212	C - 2		
Q213	C - 4		
Q214	E - 5		
Q215	D - 5		
Q216	D - 5		
Q217	D - 5		
Q218	E - 5		
Q219	D - 5		
Q220	D - 5		
Q221	D - 5		
Q222	D - 5		
Q223	D - 5		
Q224	B - 6		
Q225	C - 7		

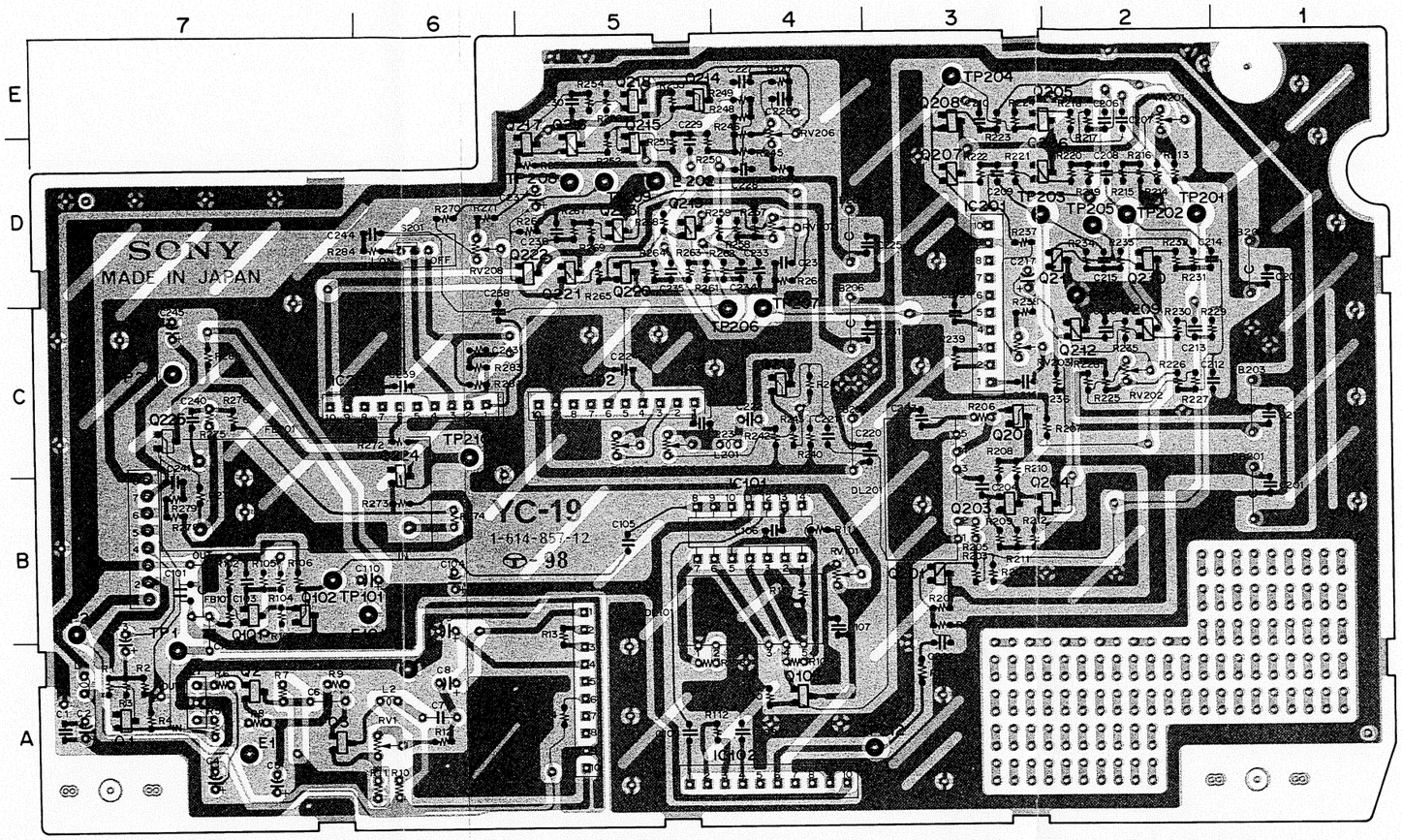

YC-19 —SOLDERING SIDE—
1-614-857-12
BVU-850P

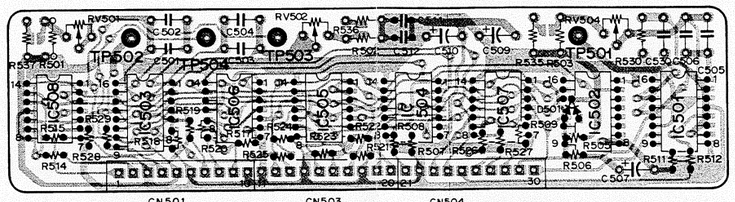

BC-7 —SOLDERING SIDE—
1-614-863-12
BVU-850P

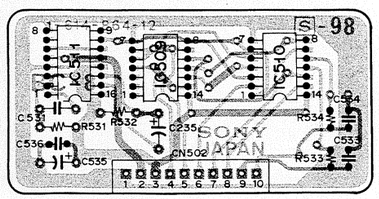

BC-8 —SOLDERING SIDE—
1-614-864-12
BVU-850P

RP-18; VIDEO REC/PB AMPLIFIER

CN1	J - 3	RV1	G - 2		
CN2	I - 3	RV2	G - 2		
CN3	H - 2	RV3	D - 3		
CN4	G - 2	RV4	B - 4		
CN6	D - 4	RV5	D - 4		
CN7	B - 2	RV101	I - 4		
		RV102	I - 3		
D1	F - 4				
D2	D - 3	T1	F - 3		
D3	F - 4	T2	D - 3		
D4	F - 4	T3	C - 3		
D5	G - 4	T4	D - 4		
D6	G - 4	T5	C - 4		
D101	I - 2				
D102	I - 2	TP1	G - 2		
D103	H - 5	TP2	G - 2		
D104	I - 5	TP3	G - 3		
		TP4	F - 2		
E1	G - 3	TP5	D - 3		
E2	F - 2	TP6	D - 3		
E3	A - 2	TP7	B - 3		
E4	A - 4	TP8	D - 4		
E101	J - 3	TP9	C - 4		
E102	H - 4	TP10	B - 4		
		TP11	A - 1		
IC1	G - 3	TP12	A - 2		
IC2	F - 5	TP101	I - 3		
IC3	B - 3	TP102	I - 3		
IC4	B - 4	TP104	H - 3		
IC5	B - 2				
IC6	B - 2				
IC7	E - 3				
IC8	E - 5				
Q3	E - 3				
Q6	E - 4				
Q101	I - 3				
Q102	J - 3				
Q103	J - 2				
Q104	I - 2				
Q105	J - 2				
Q106	J - 4				
Q107	I - 4				
Q108	H - 5				
Q109	I - 5				

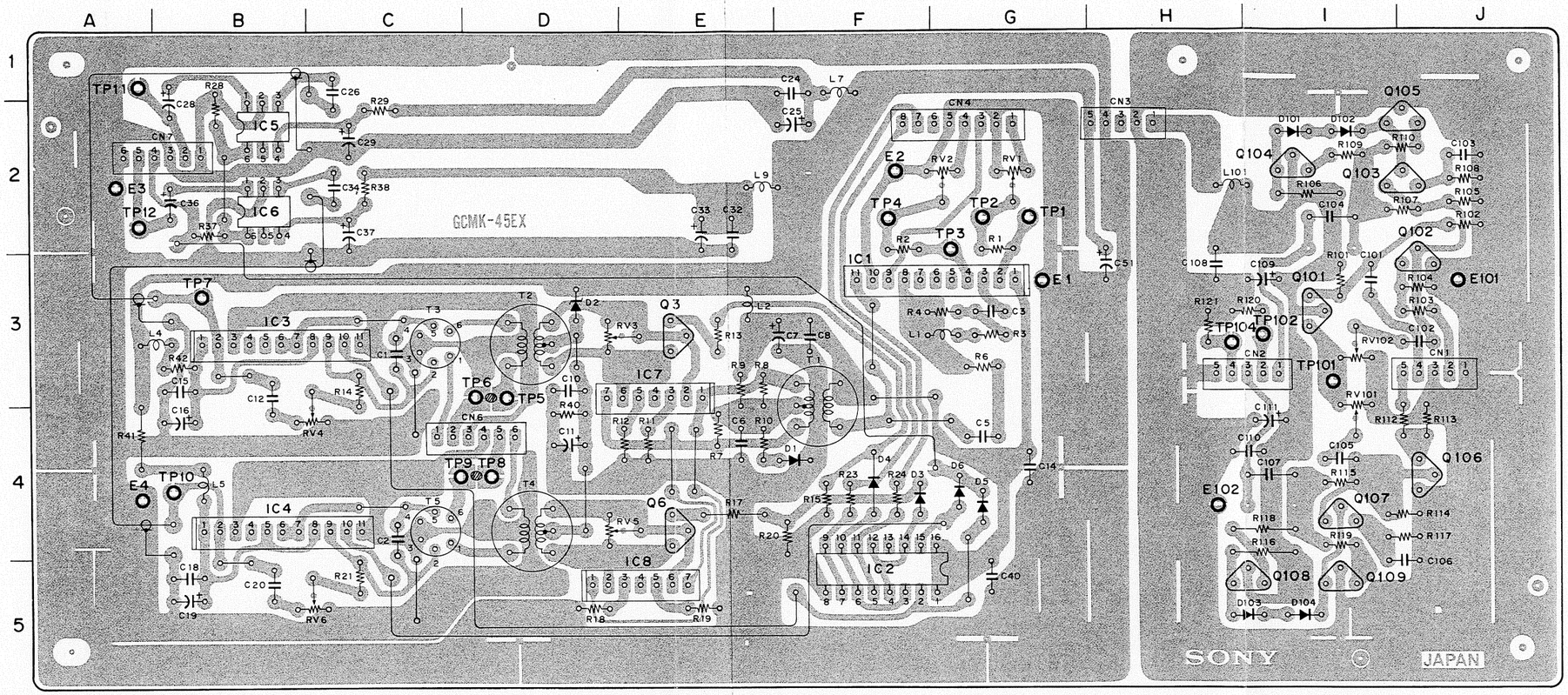

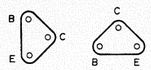

RP-18 —SOLDERING SIDE—
1-614-835-12
BVU-850P

YD-17; Y DEMODULATOR

S/N; UP TO 10390

D3	E - 8	Q17	A - 7		
D4	E - 8	Q18	C - 8		
D101	F - 4	Q19	B - 6		
D102	E - 5	Q20	C - 6		
D203	H - 4	Q101	C - 3		
D204	H - 4	Q102	D - 1		
D205	H - 6	Q103	D - 3		
D206	H - 6	Q104	C - 3		
D207	H - 6	Q105	D - 4		
		Q106	E - 5		
DL1	B - 5	Q107	F - 5		
DL2	A - 5	Q108	F - 5		
DL3	B - 2	Q109	F - 5		
DL4	A - 2	Q110	C - 2		
DL5	C - 7	Q111	G - 2		
DL201	H - 7	Q112	G - 4		
DL202	G - 8	Q113	B - 3		
		Q114	D - 4		
E1	C - 8	Q201	H - 3		
E2	C - 6	Q202	H - 3		
E3	C - 7	Q203	G - 4		
E4	B - 1	Q204	H - 4		
E102	E - 6	Q206	H - 5		
E201	G - 7	Q207	G - 7		
E202	H - 8	Q208	G - 8		
		Q210	H - 8		
FL1	D - 6	Q211	H - 8		
FL2	C - 7	Q212	H - 8		
FL3	B - 7				
FL101	B - 2	RV1	B - 5		
FL102	E - 1	RV4	C - 5		
FL103	G - 2	RV5	C - 5		
		RV8	B - 6		
IC1	B - 4	RV9	A - 6		
IC2	D - 5	RV10	B - 6		
IC3	D - 7	RV11	A - 7		
IC4	D - 7	RV12	D - 4		
IC5	E - 7	RV13	B - 3		
IC6	E - 8	RV102	E - 1		
IC7	E - 7	RV103	D - 2		
IC8	A - 6	RV104	G - 2		
IC9	B - 7	RV105	H - 2		
IC10	C - 3	RV106	G - 2		
IC11	B - 3	RV107	F - 6		
IC101	B - 1	RV108	F - 6		
IC102	D - 1	RV109	E - 1		
IC103	E - 2	RV110	F - 3		
IC104	E - 2	RV201	H - 3		
IC105	E - 3	RV203	G - 5		
IC106	E - 4	RV204	G - 5		
IC107	F - 4	RV205	H - 5		
IC108	H - 1	RV206	H - 6		
IC109	G - 1	RV207	G - 7		
IC110	F - 5				
IC111	E - 6	S101	E - 6		
IC201	G - 3	S201	F - 1		
IC202	G - 5				
IC203	H - 6	TP1	A - 6		
IC204	G - 6	TP2	C - 5		
IC205	H - 7	TP3	E - 8		
IC206	H - 4	TP4	E - 7		
		TP5	F - 8		
LV1	D - 6	TP6	B - 7		
LV2	F - 7	TP7	D - 4		
LV101	F - 3	TP8	A - 3		
LV102	F - 3	TP9	D - 5		
LV103	E - 3	TP11	B - 5		
		TP12	B - 5		
Q1	B - 5	TP101	B - 2		
Q2	A - 4	TP102	D - 2		
Q3	A - 4	TP103	D - 3		
Q4	A - 8	TP104	D - 4		
Q5	B - 8	TP105	E - 1		
Q6	B - 8	TP107	H - 3		
Q7	C - 5	TP108	F - 5		
Q8	C - 5	TP109	E - 6		
Q9	C - 4	TP110	F - 6		
Q10	A - 2	TP112	B - 3		
Q11	C - 8	TP113	F - 2		
Q12	E - 6	TP114	F - 3		
Q13	F - 7	TP115	E - 3		
Q15	B - 6	TP201	H - 3		
Q16	B - 7	TP202	G - 6		
		TP203	H - 5		
		TP204	G - 6		
		TP205	G - 8		
		TP206	H - 5		
		TP207	G - 7		
		X101	G - 1		

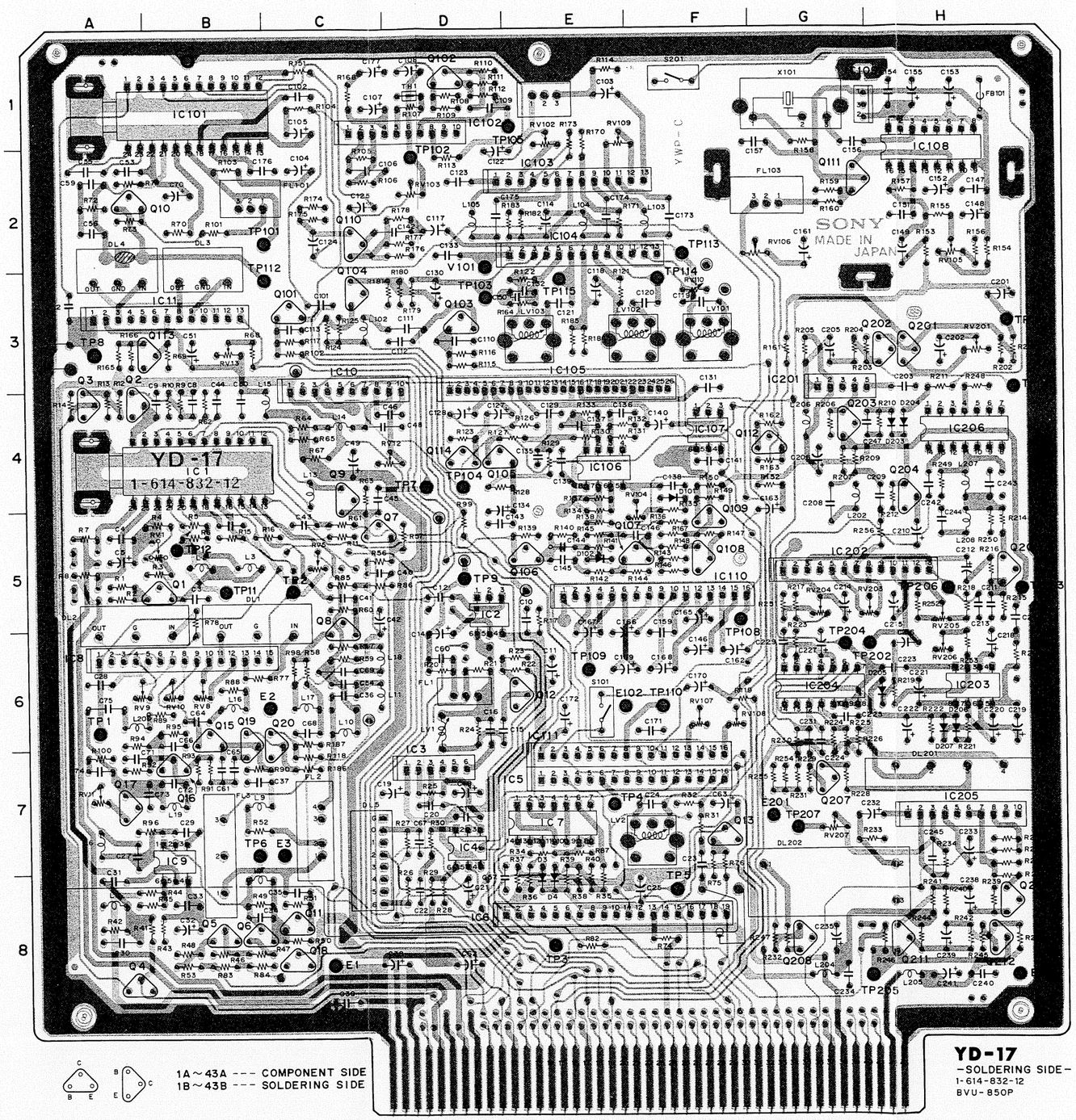

YD-17; Y DEMODULATOR

S/N; 10391 and higher

D3	E - 8	Q17	A - 7		
D4	E - 8	Q18	C - 8		
D101	F - 4	Q19	B - 6		
D102	E - 5	Q20	C - 6		
D203	H - 4	Q101	C - 3		
D204	H - 4	Q102	D - 1		
D205	H - 6	Q103	D - 3		
D206	H - 6	Q104	C - 3		
D207	H - 6	Q105	D - 4		
		Q106	E - 5		
DL1	B - 5	Q107	F - 5		
DL2	A - 5	Q108	F - 5		
DL3	B - 2	Q109	F - 5		
DL4	A - 2	Q110	C - 2		
DL5	C - 7	Q111	G - 2		
DL201	H - 7	Q112	G - 4		
DL202	G - 8	Q113	B - 3		
		Q114	D - 4		
E1	C - 8	Q201	H - 3		
E2	C - 6	Q202	H - 3		
E3	C - 7	Q203	G - 4		
E4	B - 1	Q204	H - 4		
E102	E - 6	Q206	H - 5		
E201	G - 7	Q207	G - 7		
E202	H - 8	Q208	G - 8		
		Q210	H - 8		
FL1	D - 6	Q211	H - 8		
FL2	C - 7	Q212	H - 8		
FL3	B - 7				
FL101	B - 2	RV1	B - 5		
FL102	E - 1	RV2	A - 5		
FL103	G - 2	RV3	A - 5		
		RV4	C - 5		
IC1	B - 4	RV5	C - 5		
IC2	D - 5	RV8	B - 6		
IC3	D - 7	RV9	A - 6		
IC4	D - 7	RV12	D - 4		
IC5	E - 7	RV13	B - 3		
IC6	E - 8	RV102	E - 1		
IC7	E - 7	RV103	D - 2		
IC8	A - 6	RV104	G - 2		
IC9	B - 7	RV105	H - 2		
IC10	C - 3	RV106	G - 2		
IC11	B - 3	RV107	F - 6		
IC101	B - 1	RV108	F - 6		
IC102	D - 1	RV109	E - 1		
IC103	E - 2	RV110	F - 3		
IC104	E - 2	RV201	H - 3		
IC105	E - 3	RV203	G - 5		
IC106	E - 4	RV204	G - 5		
IC107	F - 4	RV205	H - 5		
IC108	H - 1	RV206	H - 6		
IC109	G - 1	RV207	G - 7		
IC110	F - 5				
IC111	E - 6	S101	E - 6		
IC201	G - 3	S201	F - 1		
IC202	G - 5				
IC203	H - 6	TP1	A - 6		
IC204	G - 6	TP2	C - 5		
IC205	H - 7	TP3	E - 8		
IC206	H - 4	TP4	E - 7		
		TP5	F - 8		
LV1	D - 6	TP6	B - 7		
LV2	F - 7	TP7	D - 4		
LV101	F - 3	TP8	A - 3		
LV102	F - 3	TP9	D - 5		
LV103	E - 3	TP11	B - 5		
		TP12	B - 5		
Q1	B - 5	TP101	B - 2		
Q2	A - 4	TP102	D - 2		
Q3	A - 4	TP103	D - 3		
Q4	A - 8	TP104	D - 4		
Q5	B - 8	TP105	E - 1		
Q6	B - 8	TP107	H - 3		
Q7	C - 5	TP108	F - 5		
Q8	C - 5	TP109	E - 6		
Q9	C - 4	TP110	F - 6		
Q10	A - 2	TP112	B - 3		
Q11	C - 8	TP113	F - 2		
Q12	E - 6	TP114	F - 3		
Q13	F - 7	TP115	E - 3		
Q15	B - 6	TP201	H - 3		
Q16	B - 7	TP202	G - 6		
		TP203	H - 5		
		TP204	G - 6		
		TP205	G - 8		
		TP206	H - 5		
		TP207	G - 7		
		X101	G - 1		

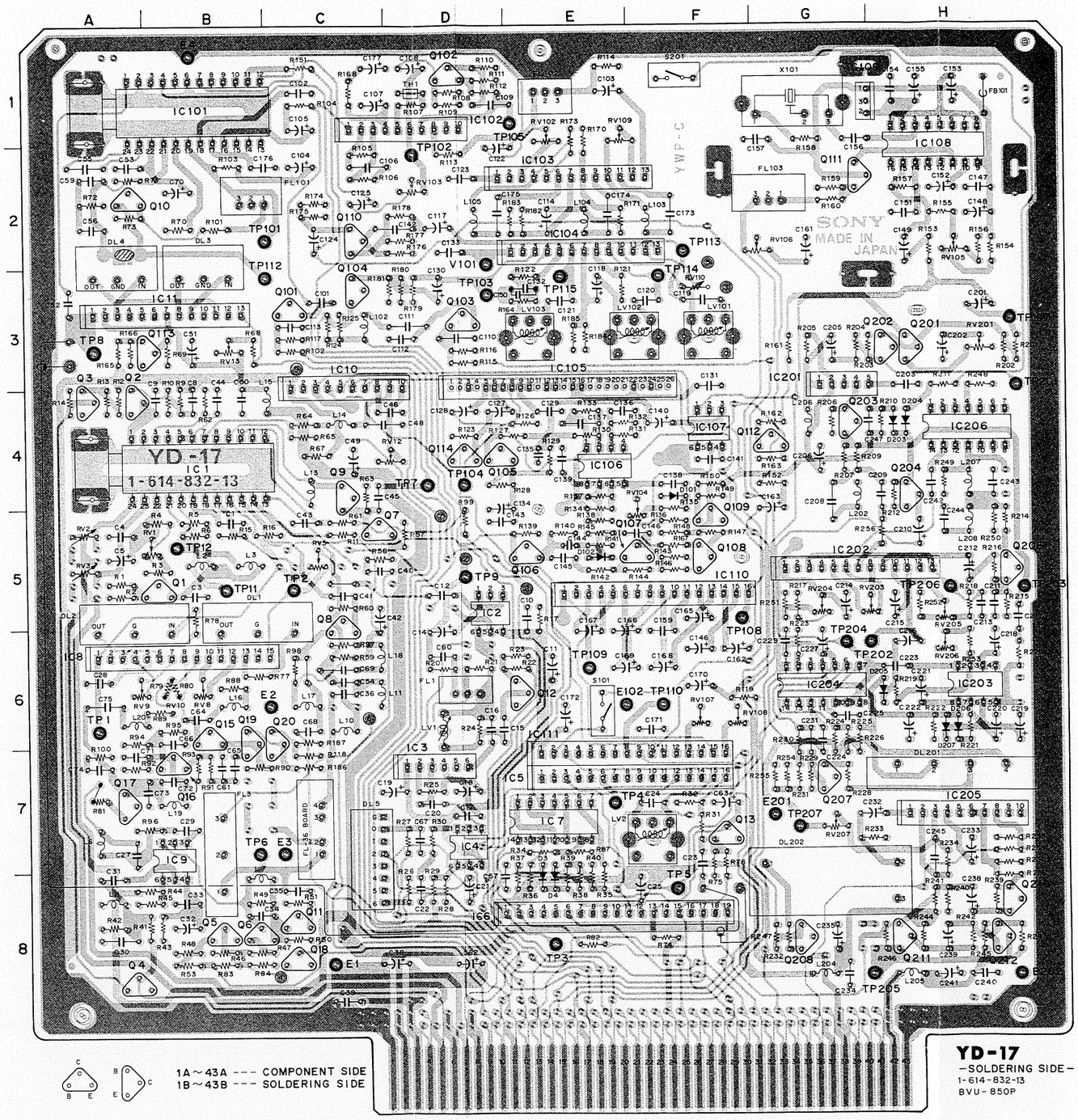

YD-17
–SOLDERING SIDE–
1-614-832-13
BVU-850P

AUD-1; AUDIO FM DETECTOR
FL-36

CN1	G - 2
CN2	G - 3
D1	F - 3
D2	F - 3
D3	D - 1
D4	G - 2
E1	G - 3
FL1	D - 1
IC1	A - 2
IC2	D - 3
IC3	D - 3
IC4	F - 3
IC5	D - 3
Q2	D - 2
Q3	B - 2
Q4	F - 3
Q5	D - 3
RV1	E - 3
RV2	E - 3
RV3	A - 2
TP1	F - 2
TP2	B - 2
TP3	E - 3
TP4	G - 3
TP5	F - 2

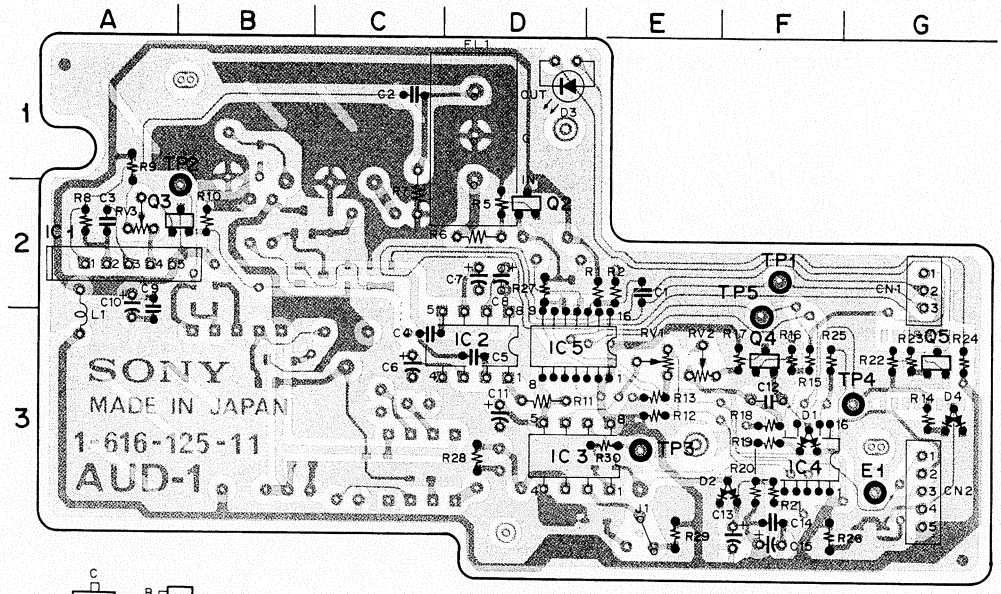

AUD-1 –SOLDERING SIDE–
1-616-125-12
BVU-850P

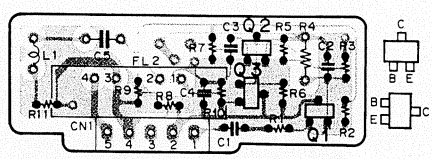

FL-36 – SOLDERING SIDE –
1-617-304-11
BVU-850P

CD-29; CHROMA DEMODULATOR/ENHANCER
NR-8; NOISE REDUCTION

S/N; UP TO 10390

D1	C - 1	Q39	D - 6
D2	C - 1	Q45	D - 6
D5	B - 4	Q301	G - 1
D6	A - 6	Q302	E - 2
D7	D - 3	Q303	G - 4
D8	F - 8	Q304	H - 4
D9	B - 2	Q305	G - 4
D10	B - 4	Q306	H - 5
D11	A - 4	Q307	G - 5
D12	A - 3	Q308	E - 1
D13	C - 1	Q309	G - 2
D14	C - 1	Q501	G - 6
D15	C - 1	Q502	H - 6
D16	D - 2	Q507	G - 8
D301	F - 1	Q508	G - 8
D302	F - 1	Q509	F - 5
D501	H - 5	Q510	G - 6
D502	H - 5	Q511	G - 6
		Q512	G - 6
DL1	B - 7		
DL2	B - 7	RV1	B - 8
DL3	D - 8	RV2	A - 7
DL301	F - 1		
DL302	H - 4	RV3	D - 8
		RV5	D - 6
E2	A - 1	RV6	D - 6
E3	G - 2	RV7	D - 6
E5	E - 6	RV8	D - 6
E301	G - 4	RV9	D - 2
E502	H - 6	RV10	C - 1
		RV11	E - 1
FL1	A - 8	RV12	B - 4
FL2	B - 5	RV13	A - 2
FL3	C - 4	RV14	C - 2
FL4	D - 8	RV15	C - 2
FL301	H - 4	RV16	B - 2
		RV17	B - 2
IC1	B - 8	RV18	B - 2
IC2	B - 7	RV19	A - 2
IC3	C - 7	RV20	B - 3
IC4	C - 6	RV21	C - 4
IC5	D - 7	RV22	B - 1
IC6	D - 7	RV23	B - 1
IC7	D - 2	RV24	F - 8
IC8	C - 1	RV25	B - 8
IC9	D - 2	RV28	D - 5
IC10	D - 4	RV30	E - 2
IC11	B - 3	RV302	G - 2
IC12	B - 2	RV303	F - 2
IC13	F - 5	RV304	E - 2
IC14	E - 4	RV305	E - 3
IC15	F - 4	RV306	G - 3
IC16	B - 1	RV308	G - 4
IC17	E - 7	RV309	H - 4
IC301	F - 1	RV310	G - 2
IC302	F - 2	RV502	G - 8
IC303	F - 3	RV504	F - 8
IC305	G - 4	RV505	G - 7
IC306	G - 5	RV506	G - 6
IC307	H - 5	RV507	H - 6
IC309	F - 2	RV508	G - 6
IC503	F - 8	RV509	F - 6
IC504	G - 7		
IC505	G - 8	S301	E - 2
IC506	H - 7	S501	F - 7
IC507	H - 8		
IC508	H - 8	TP1	B - 8
		TP2	C - 6
LV301	E - 1	TP3	C - 6
		TP4	D - 6
Q3	C - 7	TP5	B - 6
Q4	D - 5	TP6	C - 1
Q5	C - 5	TP7	E - 2
Q6	D - 5	TP8	A - 3
Q7	D - 5	TP9	B - 5
Q8	D - 5	TP10	C - 5
Q9	D - 6	TP11	A - 2
Q10	D - 6	TP12	D - 1
Q11	D - 7	TP13	C - 3
Q12	F - 8	TP14	E - 5
Q13	C - 2	TP15	C - 3
Q14	D - 2	TP16	F - 5
Q15	C - 2	TP17	F - 4
Q16	C - 1	TP18	A - 1
Q17	D - 2	TP21	E - 8
Q18	A - 5	TP22	E - 7
Q19	A - 4	TP23	C - 8
Q20	B - 4	TP30	E - 2
Q21	B - 6	TP301	E - 2
Q22	A - 6	TP302	F - 2
Q23	A - 6	TP303	F - 3
Q24	F - 8	TP304	G - 4
Q25	B - 2	TP305	H - 5
Q26	C - 3	TP306	H - 5
Q27	E - 5	TP307	F - 5
Q28	F - 4	TP308	E - 3
Q29	F - 5	TP503	H - 7
Q30	F - 5	TP504	H - 8
Q31	E - 5	TP505	H - 6
Q32	F - 8	TP506	G - 7
Q33	B - 8	TP507	G - 8
Q34	A - 8	TP508	H - 6
Q35	A - 8	TP509	H - 5
Q36	A - 7		
Q37	A - 7	T1	D - 4
Q38	A - 7		
		X1	D - 4

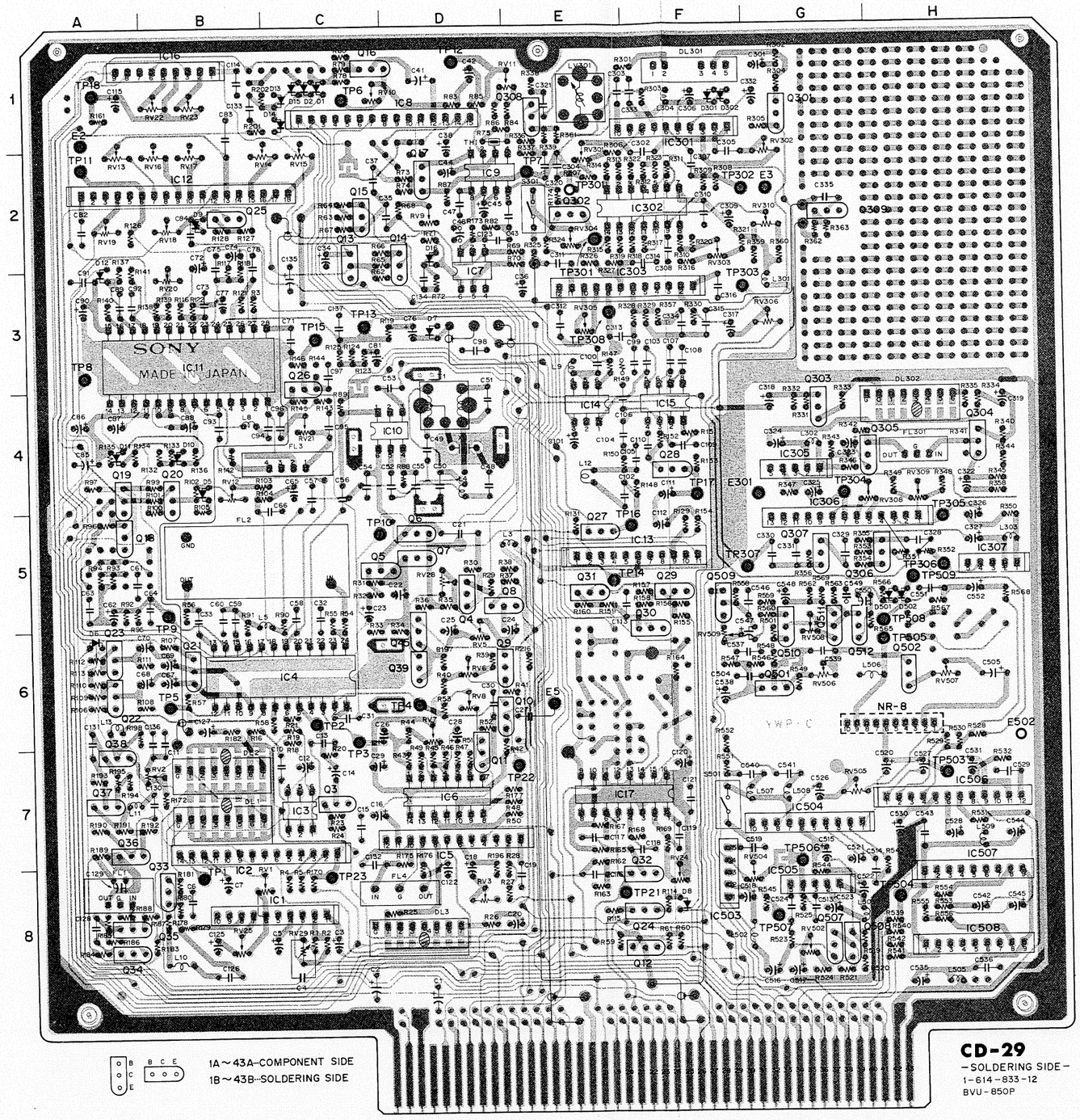

CD-29
– SOLDERING SIDE –
1-614-833-12
BVU-850P

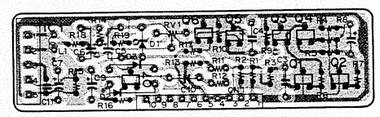

C
B E

NR-8 – SOLDERING SIDE –
1-614-865-12
BVU-850P

CD-29; CHROMA DEMODULATOR/ENHANCER
NR-8; NOISE REDUCTION

S/N; 10391 and higher

D1	C - 1	Q39	D - 6
D2	C - 1	Q45	D - 6
D5	B - 4	Q301	G - 1
D6	A - 6	Q302	E - 2
D7	D - 3	Q303	G - 4
D8	F - 8	Q304	H - 4
D9	B - 2	Q305	G - 4
D10	B - 4	Q306	H - 5
D11	A - 4	Q307	G - 5
D12	A - 3	Q308	E - 1
D13	C - 1	Q309	G - 2
D14	C - 1	Q501	G - 6
D15	C - 1	Q502	H - 6
D16	D - 2	Q507	G - 8
D301	F - 1	Q508	G - 8
D302	F - 1	Q509	F - 5
D501	H - 5	Q510	G - 6
D502	H - 5	Q511	G - 6
		Q512	G - 6
DL1	B - 7		
DL2	B - 7	RV1	B - 8
DL3	D - 8	RV2	A - 7
DL301	F - 1		
DL302	H - 4	RV3	D - 8
		RV5	D - 6
E2	A - 1	RV6	D - 6
E3	G - 2	RV7	D - 6
E5	E - 6	RV8	D - 6
E301	G - 4	RV9	D - 2
		RV10	C - 1
FL1	A - 8	RV11	E - 1
FL2	B - 5	RV12	B - 4
FL3	C - 4	RV13	A - 2
FL4	D - 8	RV14	C - 2
FL301	H - 4	RV15	C - 2
		RV16	B - 2
IC1	B - 8	RV17	B - 2
IC2	B - 7	RV18	B - 2
IC3	C - 7	RV19	A - 2
IC4	C - 6	RV20	B - 3
IC5	D - 7	RV21	C - 4
IC6	D - 7	RV22	B - 1
IC7	D - 2	RV23	B - 1
IC8	C - 1	RV24	F - 8
IC9	D - 2	RV25	B - 8
IC10	D - 4	RV28	D - 5
IC11	B - 3	RV30	E - 2
IC12	B - 2	RV302	G - 2
IC13	F - 5	RV303	F - 2
IC14	E - 4	RV304	E - 2
IC15	F - 4	RV305	E - 3
IC16	B - 1	RV306	G - 3
IC17	E - 7	RV308	G - 4
IC301	F - 1	RV309	H - 4
IC302	F - 2	RV310	G - 2
IC303	F - 3	RV502	G - 8
IC305	G - 4	RV504	F - 8
IC306	G - 5	RV505	G - 7
IC307	H - 5	RV506	G - 6
IC309	F - 2	RV507	H - 6
IC503	F - 8	RV508	G - 6
IC504	G - 7	RV509	F - 6
IC505	G - 8		
IC506	H - 7	S301	E - 2
IC507	H - 8	S501	F - 7
IC508	H - 8		
		TP1	B - 8
LV301	E - 1	TP2	C - 6
		TP3	C - 6
Q3	C - 7	TP4	D - 6
Q4	D - 5	TP5	B - 6
Q5	C - 5	TP6	C - 1
Q6	D - 5	TP7	E - 2
Q7	D - 5	TP8	A - 3
Q8	D - 5	TP9	B - 5
Q9	D - 6	TP10	C - 5
Q10	D - 6	TP11	A - 2
Q11	D - 7	TP12	D - 1
Q12	F - 8	TP13	C - 3
Q13	C - 2	TP14	E - 5
Q14	D - 2	TP15	C - 3
Q15	C - 2	TP16	F - 5
Q16	C - 1	TP17	F - 4
Q17	D - 2	TP18	A - 1
Q18	A - 5	TP21	E - 8
Q19	A - 4	TP22	E - 7
Q20	B - 4	TP23	C - 8
Q21	B - 6	TP30	E - 2
Q22	A - 6	TP301	E - 2
Q23	A - 6	TP302	F - 2
Q24	F - 8	TP303	F - 3
Q25	B - 2	TP304	G - 4
Q26	C - 3	TP305	H - 5
Q27	E - 5	TP306	H - 5
Q28	F - 4	TP307	F - 5
Q29	F - 5	TP308	E - 3
Q30	F - 5	TP503	H - 7
Q31	E - 5	TP504	H - 8
Q32	F - 8	TP505	H - 6
Q33	B - 8	TP506	G - 7
Q34	A - 8	TP507	G - 8
Q35	A - 8	TP508	H - 6
Q36	A - 7	TP509	H - 5
Q37	A - 7		
Q38	A - 7	T1	D - 4
		X1	D - 4

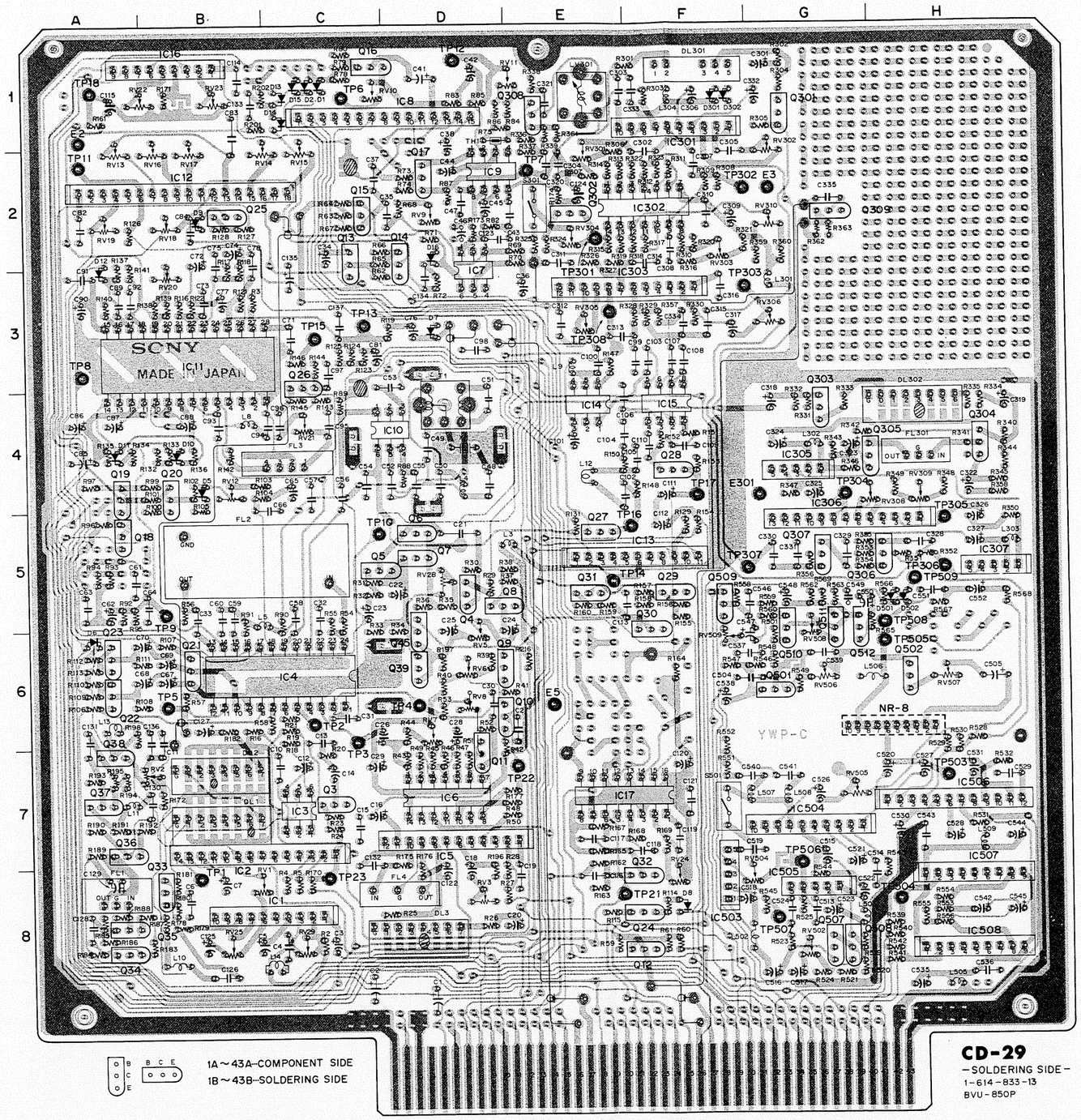

B C E
1A～43A–COMPONENT SIDE
1B～43B–SOLDERING SIDE

CD-29
– SOLDERING SIDE –
1-614-833-13
BVU-850P

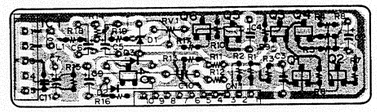

C
B E

NR-8 – SOLDERING SIDE –
1-614-865-12
BVU-850P

CP-93; AUDIO INPUT LEVEL SELECT
CP-92; AUDIO INPUT AMPLIFIER

S/N; UP TO 10390

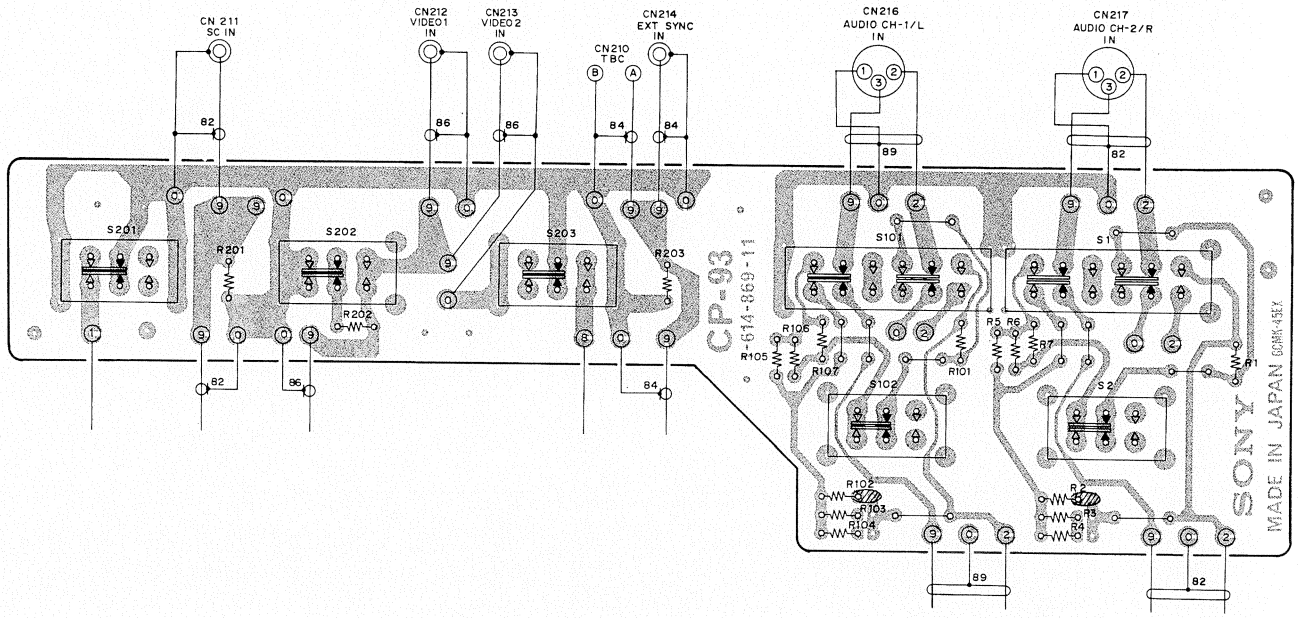

CP-93 – SOLDERING SIDE –
1-614-869-11
BVU-850P

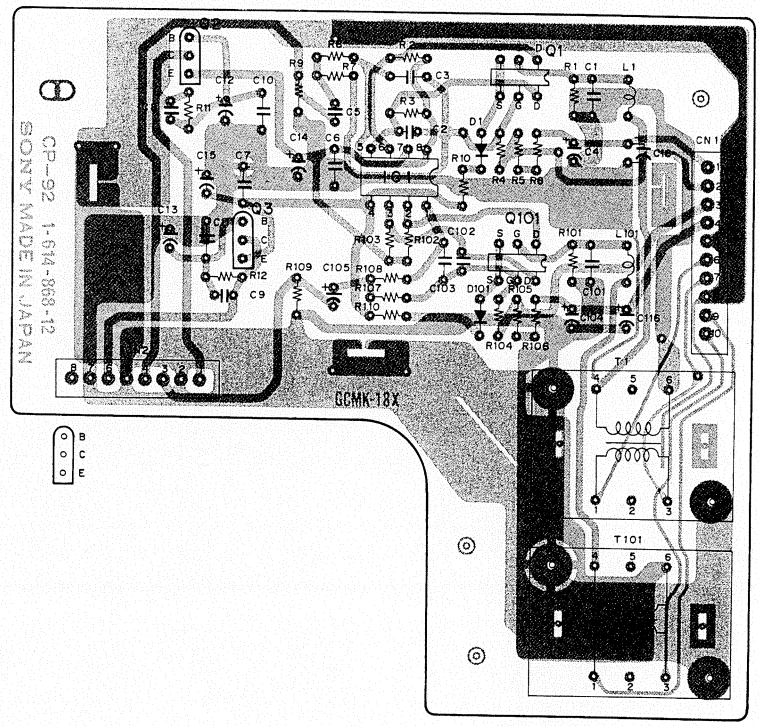

CP-92 – SOLDERING SIDE –
1-614-868-12
BVU-850P

CP-93; AUDIO INPUT LEVEL SELECT
CP-92; AUDIO INPUT AMPLIFIER
S/N; 10391 and higher

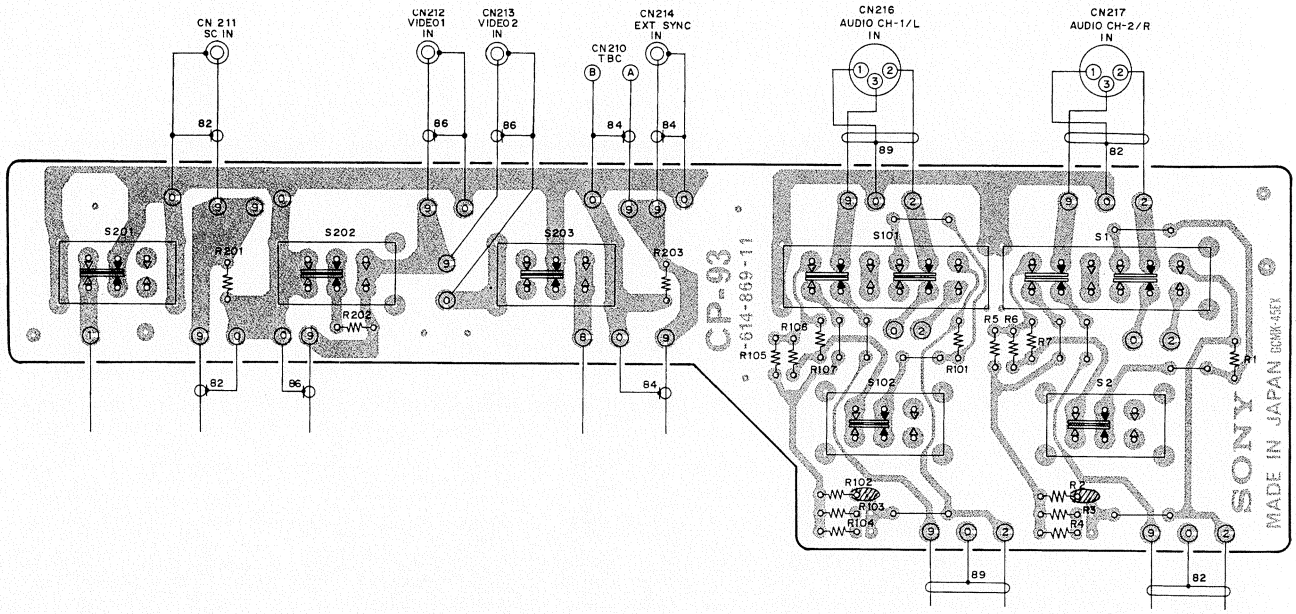

CP-93 –SOLDERING SIDE–
1-614-869-11
BVU-850P

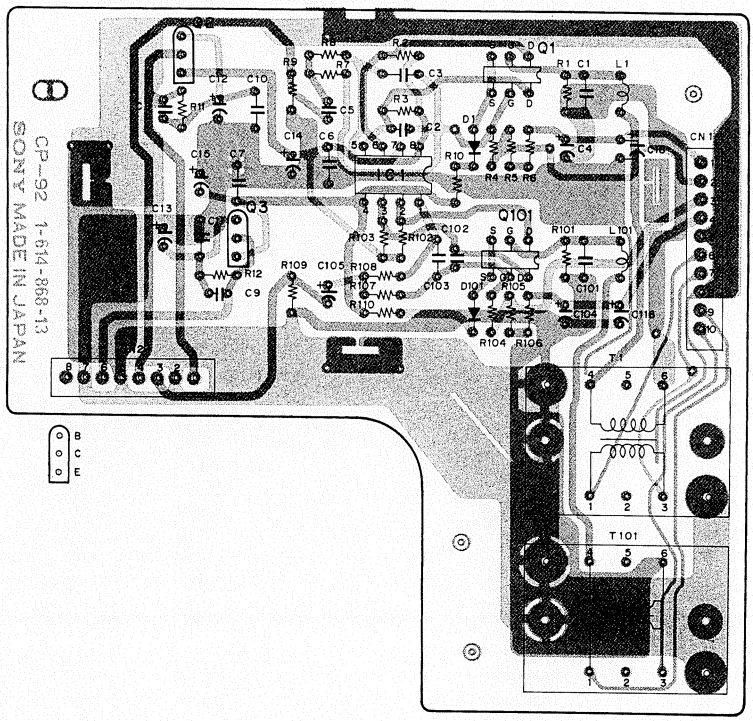

CP-92 – SOLDERING SIDE –
1-614-868-13
BVU-850P

AU-62, DUS-71(A)•(B), FL-31

AU-62; AUDIO PB/REC AMPLIFIER
DUS-71(A), (B); VAR, INDUCTOR
FL-31; NOISE FILTER

S/N; UP TO 10390

CN1	A - 8	Q104	C - 7	IC101	E - 6
CN2	D - 8	Q117	D - 1	IC102	E - 6
CN3	C - 8	Q118	D - 2	IC103	D - 7
CN4	F - 8	Q119	E - 7	IC104	E - 5
CN5	G - 8	Q120	E - 2	IC105	E - 3
CN11	F - 2	Q121	D - 2	IC106	C - 3
CN12	A - 2	Q122	D - 2	IC107	D - 6
CN13	B - 8	Q123	D - 1	IC201	B - 6
CN14	B - 8	Q201	A - 1	IC202	A - 6
CN701	D - 4	Q202	A - 2	IC203	C - 6
CN801	B - 3	Q203	B - 2	IC204	A - 5
		Q204	B - 6	IC205	A - 3
D101	E - 7	Q205	A - 3	IC206	C - 3
D102	E - 6	Q206	A - 3	IC502	B - 8
D103	F - 2	Q208	C - 6	IC504	G - 7
D104	E - 4	Q209	C - 5	IC601	H - 2
D106	D - 4	Q210	C - 5	IC602	H - 3
D107	D - 3	Q211	C - 4	IC603	H - 3
D108	D - 5	Q212	C - 4	IC604	H - 4
D109	D - 5	Q213	B - 4	IC605	H - 4
D110	C - 2	Q214	C - 4	IC606	H - 5
D112	D - 5	Q215	A - 6	IC607	H - 6
D113	F - 3	Q216	A - 6	IC608	H - 6
D114	D - 4	Q217	C - 1	IC609	G - 2
D115	C - 5	Q218	C - 2	IC610	G - 3
D201	A - 7	Q219	A - 7	IC611	G - 3
D202	C - 5	Q220	A - 2	IC612	G - 4
D203	A - 1	Q221	B - 2	IC613	G - 4
D204	A - 3	Q222	B - 2	IC614	G - 5
D207	B - 3	Q223	B - 1	IC615	G - 6
D208	D - 6	Q501	B - 7		
D209	C - 5	Q503	C - 7	LV101	E - 4
D210	C - 1	Q505	F - 1	LV201	B - 3
D212	B - 5	Q506	F - 2		
D213	A - 1	Q507	F - 1		
D215	B - 4	Q601	G - 4		
D601	G - 6	Q602	G - 6		
D602	H - 7	Q603	G - 7		
D603	H - 6	Q604	G - 2		
D604	H - 6	Q605	G - 2		
D605	H - 4	Q606	G - 1		
D606	H - 1	Q607	G - 1		
D607	H - 1	Q608	G - 1		
D608	H - 1	Q609	G - 1		
D609	G - 6	Q610	G - 2		
D610	H - 7	Q611	G - 2		
D611	H - 5	Q612	G - 1		
D612	G - 4	Q613	G - 1		
D613	H - 4	Q614	G - 1		
D614	G - 4	Q615	G - 1		
		Q616	H - 4		
E101	F - 7	Q617	H - 1		
E102	E - 6	Q618	G - 4		
E103	E - 2	Q619	G - 6		
E104	D - 2	Q620	H - 7		
E105	D - 1	Q621	G - 6		
E201	B - 7	Q622	G - 7		
E202	A - 5	Q623	F - 6		
E203	B - 2	Q624	F - 6		
E204	C - 2				
E205	A - 1	RV101	F - 1		
E601	G - 1	RV102	E - 1		
		RV103	E - 1		
		RV104	D - 3		
		RV107	F - 1		
		RV108	E - 3		
		RV109	E - 3		
		RV201	A - 1		
		RV202	B - 1		
		RV203	B - 1		
		RV204	B - 4		
		RV205	C - 1		
		RV207	A - 1		
		RV208	A - 3		
		S1	H - 1		
		T101	D - 2		
		T201	C - 2		
		TP101	E - 6		
		TP102	D - 7		
		TP103	E - 1		
		TP104	E - 1		
		TP105	C - 2		
		TP201	B - 6		
		TP202	B - 5		
		TP203	B - 1		
		TP204	B - 1		
		TP205	C - 3		
		TP601	H - 5		
		TP602	H - 5		
		TP603	F - 3		
		TP604	G - 3		
		TP605	G - 7		
		TP606	G - 7		
		TP607	F - 3		
		TP608	G - 1		
		TP609	F - 5		
		TP610	G - 5		
		TP611	G - 7		
		TP612	H - 3		

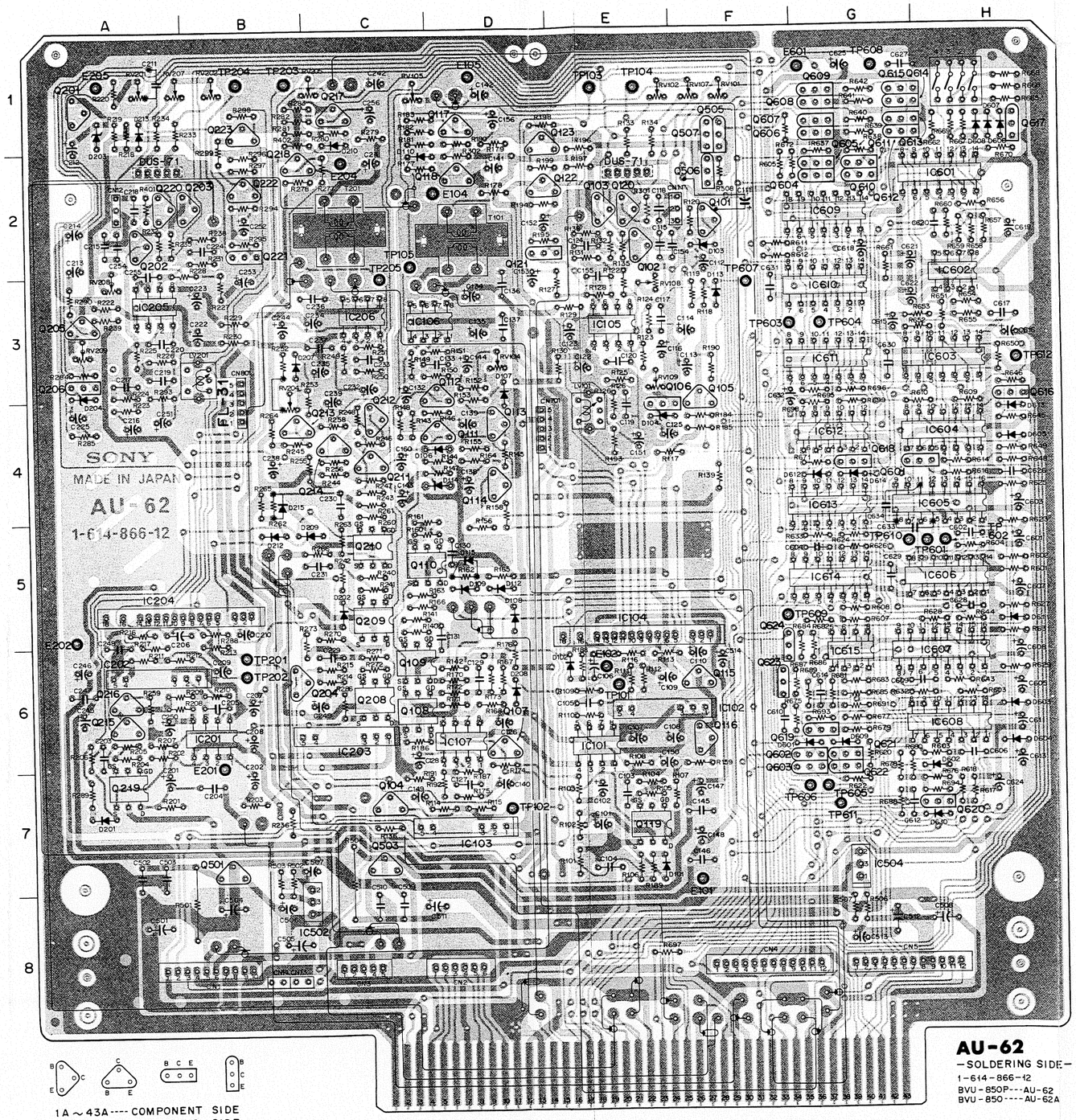

1A ～ 43A ---- COMPONENT SIDE
1B ～ 43B ---- SOLDERING SIDE

AU-62
-SOLDERING SIDE-
1-614-866-12
BVU-850P---AU-62
BVU-850----AU-62A

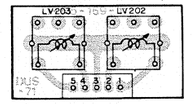

DUS-71(B)
-SOLDERING SIDE-
1-615-169-11
BVU-850P
BVU-850

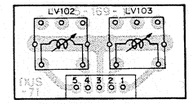

DUS-71(A)
-SOLDERING SIDE-
1-615-169-11
BVU-850P
BVU-850

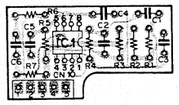

FL-31-SOLDERING SIDE-
1-616-245-12
BVU-850P
BVU-850

AU-62, DUS-71(A),(B), FL-31

AU-62; AUDIO PB/REC AMPLIFIER
DUS-71(A), (B); VAR, INDUCTOR
FL-31; NOISE FILTER

S/N; 10391 and higher

CN1	A - 8	Q104	C - 7		
CN2	D - 8	Q117	D - 1		
CN3	C - 8	Q118	D - 2		
CN4	F - 8	Q119	E - 7		
CN5	G - 8	Q120	E - 2		
CN11	F - 2	Q121	D - 2		
CN12	A - 2	Q122	D - 2		
CN13	B - 8	Q123	D - 1		
CN14	B - 8	Q201	A - 1		
CN701	D - 4	Q202	A - 2		
CN801	B - 3	Q203	B - 2		
		Q204	B - 6		
D101	E - 7	Q205	A - 3		
D102	E - 6	Q206	A - 3		
D103	F - 2	Q208	C - 6		
D104	E - 4	Q209	C - 5		
D106	D - 4	Q210	C - 5		
D107	D - 3	Q211	C - 4		
D108	D - 5	Q212	C - 4		
D109	D - 5	Q213	B - 4		
D110	C - 2	Q214	C - 4		
D112	D - 5	Q215	A - 6		
D113	F - 3	Q216	A - 6		
D114	D - 4	Q217	C - 1		
D115	D - 5	Q218	C - 2		
D201	A - 7	Q219	A - 7		
D202	C - 5	Q220	A - 2		
D203	A - 1	Q221	B - 2		
D204	A - 3	Q222	B - 2		
D207	B - 3	Q223	B - 1		
D208	D - 6	Q501	B - 7		
D209	C - 5	Q503	C - 7		
D210	C - 1	Q505	F - 1		
D212	B - 5	Q506	F - 2		
D213	A - 1	Q507	F - 1		
D215	B - 4	Q601	G - 4		
D601	G - 6	Q602	G - 6		
D602	H - 7	Q603	G - 7		
D603	H - 6	Q604	G - 2		
D604	H - 6	Q605	G - 2		
D605	H - 4	Q606	G - 1		
D606	H - 1	Q607	G - 1		
D607	H - 1	Q608	G - 1		
D608	H - 1	Q609	G - 1		
D609	G - 6	Q610	G - 2		
D610	H - 7	Q611	G - 2		
D611	H - 5	Q612	G - 1		
D612	G - 4	Q613	G - 1		
D613	H - 4	Q614	G - 1		
D614	G - 4	Q615	G - 1		
		Q616	H - 4		
E101	F - 7	Q617	H - 1		
E102	E - 6	Q618	G - 4		
E103	E - 2	Q619	G - 6		
E105	D - 1	Q620	H - 7		
E201	B - 7	Q621	G - 6		
E202	A - 5	Q622	G - 7		
E203	B - 2	Q623	F - 6		
E204	C - 2	Q624	F - 6		
E205	A - 1				
E601	G - 1	RV101	F - 1		
		RV102	E - 1		
IC101	E - 6	RV103	E - 1		
IC102	E - 6	RV104	D - 3		
IC103	D - 7	RV107	F - 1		
IC104	E - 5	RV108	E - 3		
IC105	E - 3	RV109	E - 3		
IC106	C - 3	RV201	A - 1		
IC107	D - 6	RV202	B - 1		
IC201	B - 6	RV203	B - 1		
IC202	A - 6	RV204	B - 4		
IC203	C - 6	RV205	C - 1		
IC204	A - 5	RV207	A - 1		
IC205	A - 3	RV208	A - 3		
IC206	C - 3				
IC502	B - 8	S1	H - 1		
IC504	G - 7				
IC601	H - 2	T101	D - 2		
IC602	H - 3	T201	C - 2		
IC603	H - 3				
IC604	H - 4	TP101	E - 6		
IC605	H - 4	TP102	D - 7		
IC606	H - 5	TP103	E - 1		
IC607	H - 6	TP104	E - 1		
IC608	H - 6	TP105	C - 2		
IC609	G - 2	TP201	B - 6		
IC610	G - 3	TP202	B - 5		
IC611	G - 3	TP203	B - 1		
IC612	G - 4	TP204	B - 1		
IC613	G - 4	TP205	B - 2		
IC614	G - 5	TP601	H - 5		
IC615	G - 6	TP602	H - 5		
		TP603	F - 3		
LV101	E - 4	TP604	G - 3		
LV201	B - 3	TP605	G - 7		
		TP606	G - 7		
		TP607	F - 3		
		TP608	G - 1		
		TP609	F - 5		
		TP610	G - 5		
		TP611	G - 7		
		TP612	H - 3		

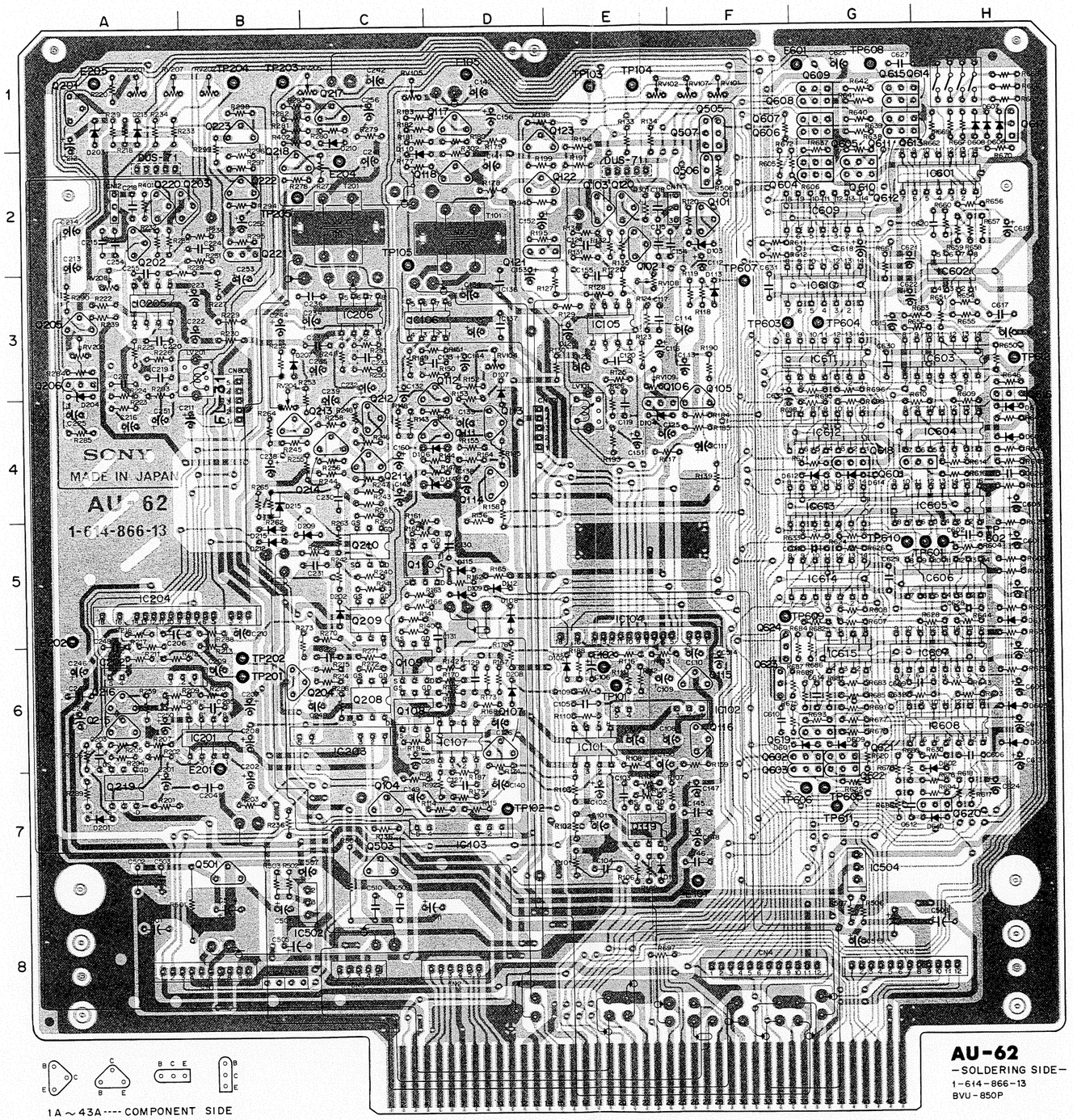
A
B
C
D
E
F
G
H
1
2
3
4
5
6
7
8
SONY
MADE IN JAPAN
AU-62
1-614-866-13
DUS-71
DUS-71
DUS-71

AU-63; AUDIO HEAD AMP/BIAS/ERASE OSC.

S/N; UP TO 10390

Ref.	Location	Ref.	Location	Ref.	Location
CN1	G - 7	Q205	E - 5	T404	B - 5
CN3	F - 7	Q206	F - 5	T405	A - 5
CN4	C - 7	Q207	E - 2		
CN5	B - 7	Q208	E - 2	TP101	G - 7
CN7	H - 5	Q209	E - 4	TP102	G - 6
CN8	F - 6	Q210	F - 1	TP103	H - 6
CN9	H - 6	Q211	F - 5	TP104	H - 5
CN10	F - 6	Q212	E - 3	TP105	H - 1
CN11	H - 6	Q402	B - 4	TP106	G - 1
CN12	F - 6	Q403	A - 4	TP107	H - 1
		Q404	A - 4	TP108	H - 1
D101	G - 5	Q405	B - 4	TP201	E - 7
D102	G - 5	Q406	C - 4	TP202	E - 6
D103	H - 4	Q407	C - 4	TP203	F - 6
D104	G - 2	Q408	B - 4	TP204	F - 5
D106	G - 5	Q409	B - 1	TP205	F - 1
D201	E - 5	Q410	C - 2	TP206	E - 1
D202	E - 5	Q411	C - 3	TP207	F - 1
D203	F - 4	Q412	C - 1	TP208	F - 1
D204	E - 2	Q413	A - 1	TP401	A - 4
D206	F - 5	Q414	B - 2	TP402	B - 3
D401	B - 1	Q415	B - 3	TP403	B - 1
D402	A - 1	Q416	B - 1	TP404	A - 1
D403	C - 6	Q417	C - 5	TP405	C - 6
D404	B - 6	Q418	C - 5	TP406	B - 6
D405	C - 7	Q419	B - 5	TP500	D - 3
D406	B - 7	Q420	C - 4	TP501	E - 3
D501	E - 6	Q421	B - 5	TP502	D - 3
D502	E - 6	Q422	B - 5	TP503	E - 7
D503	D - 6	Q423	A - 5	TP504	D - 6
D601	D - 6	Q424	B - 4	TP505	C - 7
D602	D - 6	Q429	B - 6	TP506	D - 7
		Q430	C - 6	TP507	D - 6
E101	G - 7	Q432	A - 6		
E102	G - 4	Q433	A - 6		
E103	H - 1	Q435	C - 1		
E201	E - 7	Q436	C - 1		
E202	E - 4	Q437	D - 1		
E401	A - 4	Q438	D - 1		
E402	A - 3	Q439	D - 1		
E403	C - 1	Q440	D - 1		
		Q441	C - 1		
IC101	G - 4	Q501	E - 7		
IC102	H - 3	Q502	D - 6		
IC202	F - 3	Q503	D - 4		
IC501	D - 5	Q601	D - 7		
IC502	D - 3	Q602	C - 6		
IC503	D - 2	Q603	C - 4		
IC601	C - 5	Q604	C - 4		
IC602	C - 3	Q605	C - 6		
IC603	C - 2	Q606	C - 6		
LV101	G - 6	RV101	G - 7		
LV102	G - 4	RV102	G - 7		
LV103	G - 1	RV103	H - 4		
LV104	H - 6	RV104	G - 1		
LV201	E - 6	RV105	G - 1		
LV202	F - 4	RV106	G - 6		
LV203	E - 1	RV201	F - 7		
LV204	F - 6	RV202	F - 7		
LV401	C - 3	RV203	F - 4		
LV402	B - 2	RV204	E - 1		
LV403	A - 2	RV205	E - 1		
LV404	B - 6	RV206	F - 6		
LV405	A - 6	RV401	C - 1		
Q101	G - 6	RV402	B - 1		
Q102	H - 7	RV403	D - 1		
Q103	G - 6	RV404	E - 1		
Q104	G - 5	RV501	D - 7		
Q105	G - 5	RV502	D - 6		
Q106	H - 4	RV504	D - 5		
Q107	G - 2	RV601	C - 7		
Q108	G - 2	RV603	C - 6		
Q109	G - 4	RV604	C - 5		
Q110	H - 1				
Q111	G - 5	S1	H - 5		
Q112	G - 3	S2	F - 5		
Q201	E - 6				
Q202	F - 7	T401	B - 3		
Q203	E - 5	T402	B - 2		
Q204	E - 5	T403	A - 2		

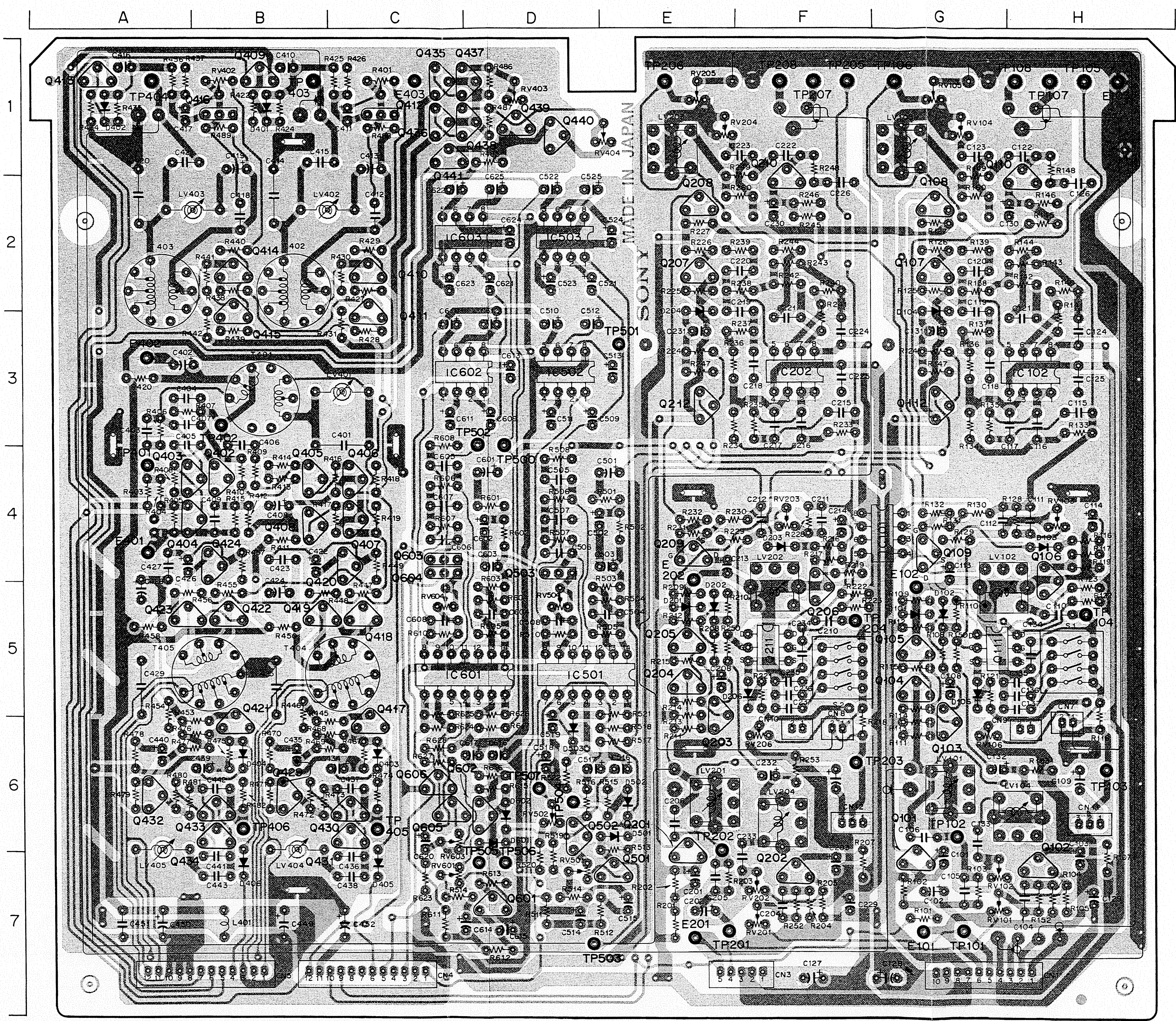

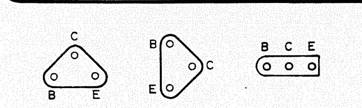

AU-63 —SOLDERING SIDE—
1-614-867-12
BVU-850P

AU-63; AUDIO HEAD AMP/BIAS/ERASE OSC.

S/N; 10391 and higher

CN1	G - 7	Q205	E - 5	T404	B - 5
CN3	F - 7	Q206	F - 5	T405	A - 5
CN4	C - 7	Q207	E - 2		
CN5	B - 7	Q208	E - 2	TP101	G - 7
CN7	H - 5	Q209	E - 4	TP102	G - 6
CN8	F - 6	Q210	F - 1	TP103	H - 6
CN9	H - 6	Q211	F - 5	TP104	H - 5
CN10	F - 6	Q212	E - 3	TP105	H - 1
CN11	H - 6	Q402	B - 4	TP106	G - 1
CN12	F - 6	Q403	A - 4	TP107	H - 1
		Q404	A - 4	TP108	H - 1
D101	G - 5	Q405	B - 4	TP201	E - 7
D102	G - 5	Q406	C - 4	TP202	E - 6
D103	H - 4	Q407	C - 4	TP203	F - 6
D104	G - 2	Q408	B - 4	TP204	F - 5
D106	G - 5	Q409	B - 1	TP205	F - 1
D201	E - 5	Q410	C - 2	TP206	E - 1
D202	E - 5	Q411	C - 3	TP207	F - 1
D203	F - 4	Q412	C - 1	TP208	F - 1
D204	E - 2	Q413	A - 1	TP401	A - 4
D206	F - 5	Q414	B - 2	TP402	B - 3
D401	B - 1	Q415	B - 3	TP403	B - 1
D402	A - 1	Q416	B - 1	TP404	A - 1
D403	C - 6	Q417	C - 5	TP405	C - 6
D404	B - 6	Q418	C - 5	TP406	B - 6
D405	C - 7	Q419	B - 5	TP500	D - 3
D406	B - 7	Q420	C - 4	TP501	E - 3
D501	E - 6	Q421	B - 5	TP502	D - 3
D502	E - 6	Q422	B - 5	TP503	E - 7
D503	D - 6	Q423	A - 5	TP504	D - 6
D601	D - 6	Q424	B - 4	TP505	C - 7
D602	D - 6	Q429	B - 6	TP506	D - 7
		Q430	C - 6	TP507	D - 6
E101	G - 7	Q432	A - 6		
E102	G - 4	Q433	A - 6		
E103	H - 1	Q435	C - 1		
E201	E - 7	Q436	C - 1		
E202	E - 4	Q437	D - 1		
E401	A - 4	Q438	D - 1		
E402	A - 3	Q439	D - 1		
E403	C - 1	Q440	D - 1		
		Q441	C - 1		
IC101	G - 4	Q501	E - 7		
IC102	H - 3	Q502	D - 6		
IC202	F - 3	Q503	D - 4		
IC501	D - 5	Q601	D - 7		
IC502	D - 3	Q602	C - 6		
IC503	D - 2	Q603	C - 4		
IC601	C - 5	Q604	C - 4		
IC602	C - 3	Q605	C - 6		
IC603	C - 2	Q606	C - 6		
LV101	G - 6	RV101	G - 7		
LV102	G - 4	RV102	G - 7		
LV103	G - 1	RV103	H - 4		
LV104	H - 6	RV104	G - 1		
LV201	E - 6	RV105	G - 1		
LV202	F - 4	RV106	G - 6		
LV203	E - 1	RV201	F - 7		
LV204	F - 6	RV202	F - 7		
LV401	C - 3	RV203	F - 4		
LV402	B - 2	RV204	E - 1		
LV403	A - 2	RV205	E - 1		
LV404	B - 6	RV206	F - 6		
LV405	A - 6	RV401	C - 1		
Q101	G - 6	RV402	B - 1		
Q102	H - 7	RV403	D - 1		
Q103	G - 6	RV404	E - 1		
Q104	G - 5	RV501	D - 7		
Q105	G - 5	RV502	D - 6		
Q106	H - 4	RV504	D - 5		
Q107	G - 2	RV601	C - 7		
Q108	G - 2	RV603	C - 6		
Q109	G - 4	RV604	C - 5		
Q110	H - 1	RV605	C - 6		
Q111	G - 5				
Q112	G - 3	S1	H - 5		
Q201	E - 6	S2	F - 5		
Q202	F - 7				
Q203	E - 5	T401	B - 3		
Q204	E - 5	T402	B - 2		
		T403	A - 2		

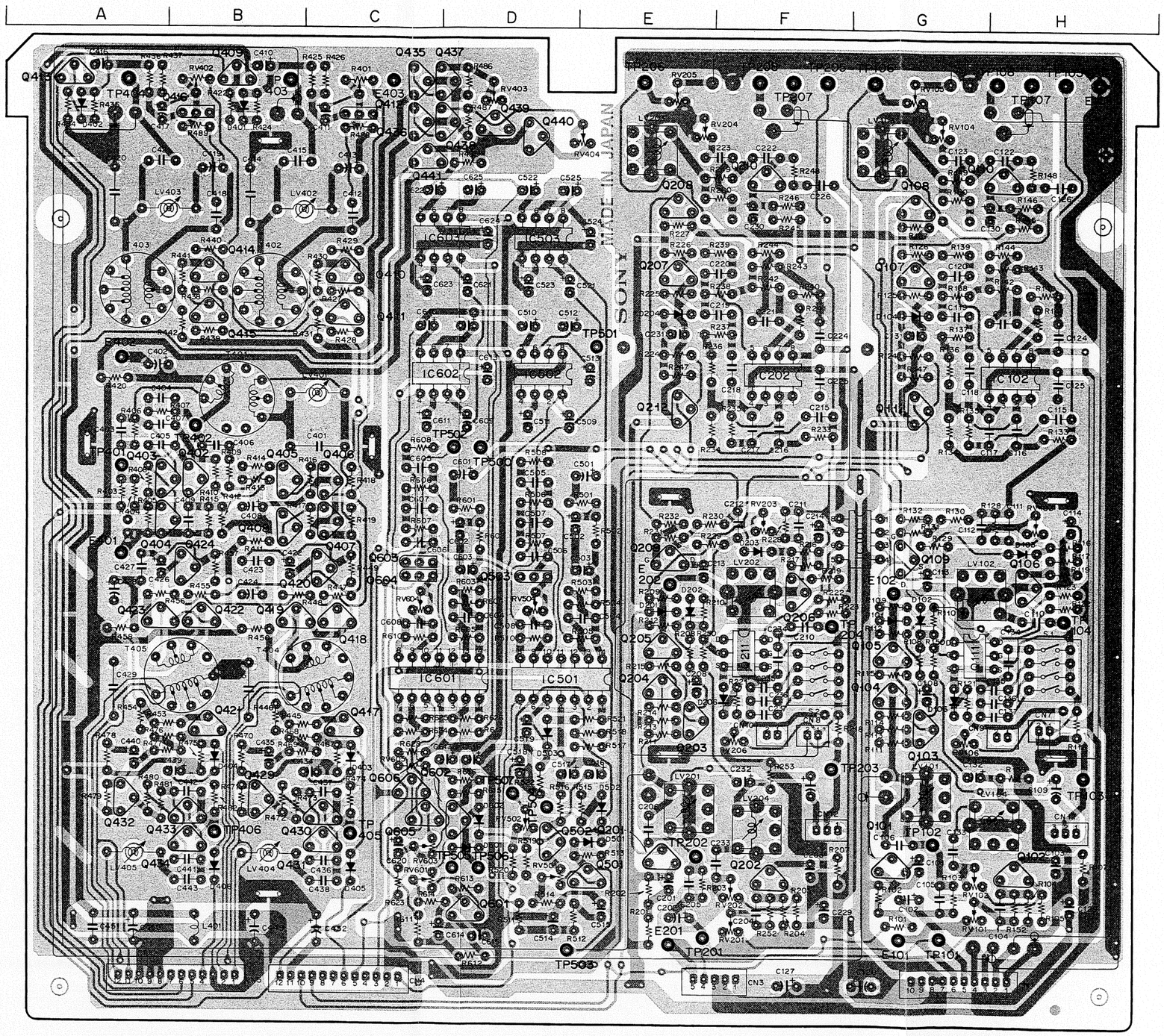

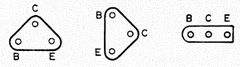

AU-63 —SOLDERING SIDE—
1-614-867-13
BVU-850P

18-31(a)

18-32(a)

AO-3, AO-2, HP-5

AO-3; AUDIO OUTPUT AMPLIFIER
AO-2; MONITOR SELECT
HP-5; HEADPHONES JACK/LEVEL CONTROL

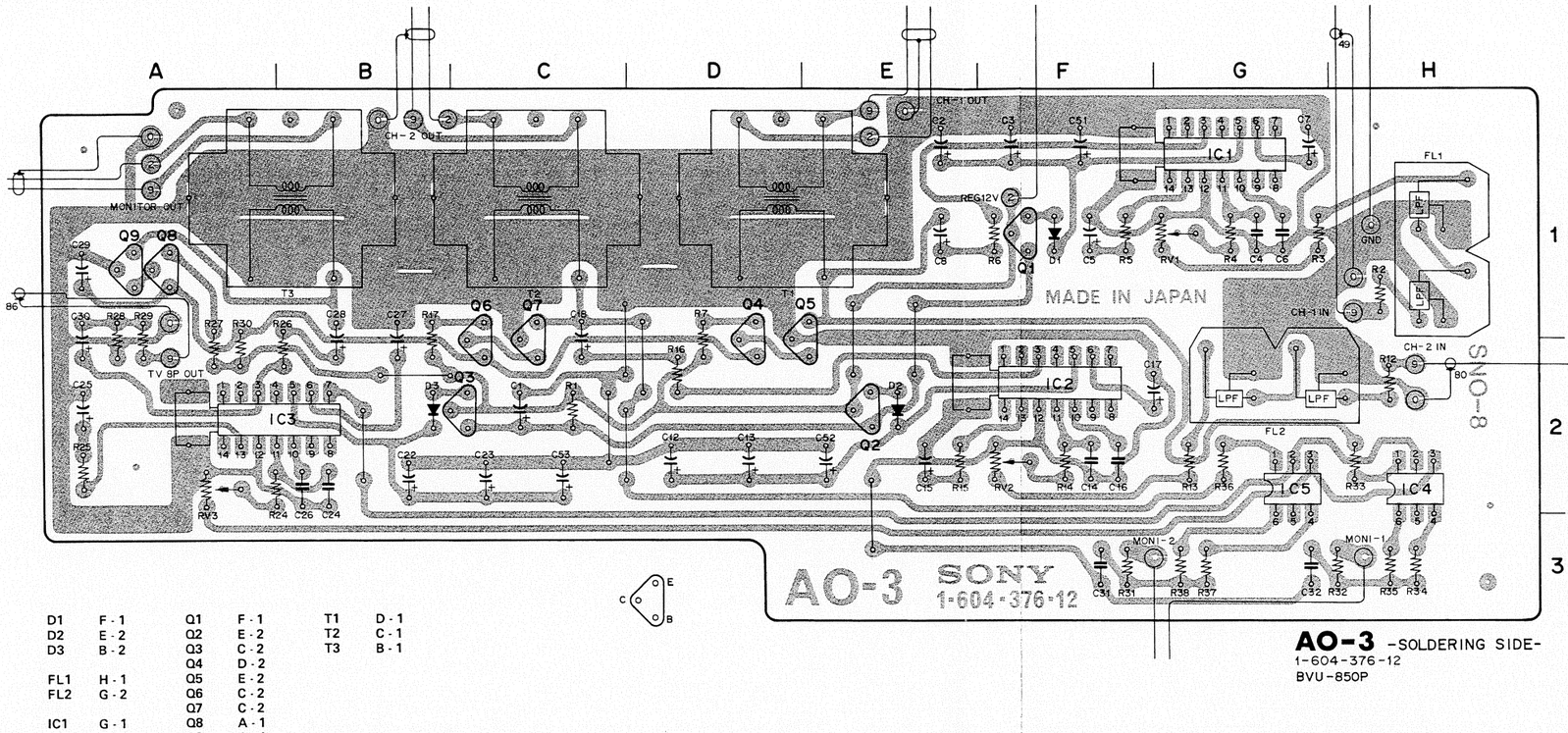

D1	F-1	Q1	F-1	T1	D-1
D2	E-2	Q2	E-2	T2	C-1
D3	B-2	Q3	C-2	T3	B-1
		Q4	D-2		
FL1	H-1	Q5	E-2		
FL2	G-2	Q6	C-2		
		Q7	C-2		
IC1	G-1	Q8	A-1		
IC2	F-2	Q9	A-1		
IC3	A-2				
IC4	H-2	RV1	G-1		
IC5	G-2	RV2	F-2		
		RV3	A-2		

AO-3 -SOLDERING SIDE-
1-604-376-12
BVU-850P

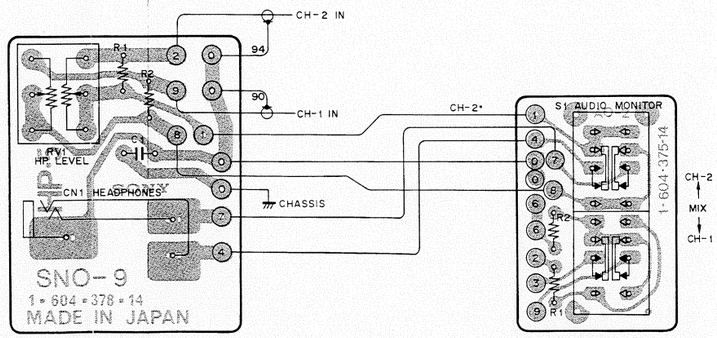

HP-5
-SOLDERING SIDE-
1-604-378-14
BVU-850P

AO-2
-SOLDERING SIDE-
1-604-375-14
BVU-850P

SV-52A; DRUM/CAPSTAN PWM SERVO

CN1	G - 8	IC1	B - 8	RB1	C - 7
		IC2	A - 7		
CP1	D - 1	IC3	A - 6	RV1	A - 1
		IC4	A - 4	RV2	F - 5
D2	H - 7	IC5	C - 2	RV3	C - 5
D3	H - 7	IC6	F - 1	RV4	E - 2
D4	A - 2	IC7	F - 2	RV5	G - 6
D5	D - 7	IC8	G - 1	RV6	H - 5
D6	E - 7	IC9	H - 2	RV7	H - 6
D7	E - 7	IC10	C - 7	RV8	D - 3
D8	H - 2	IC11	C - 6	RV9	G - 4
D9	H - 7	IC12	C - 5	RV10	H - 4
D10	F - 3	IC13	C - 4	RV11	E - 2
D11	D - 2	IC14	D - 7	RV12	F - 4
D13	G - 6	IC15	D - 6	RV13	H - 1
D14	F - 4	IC16	D - 5	RV14	B - 5
D15	H - 1	IC17	D - 4	RV15	B - 3
D16	H - 1	IC18	E - 7	RV16	C - 4
D17	E - 4	IC19	E - 6	RV17	B - 7
D18	D - 4	IC20	E - 5	RV100	C - 4
D19	D - 4	IC21	E - 4		
D20	A - 4	IC22	E - 7	TP1	B - 2
D21	A - 4	IC23	E - 6	TP2	A - 2
D22	B - 6	IC24	E - 5	TP3	B - 3
D23	B - 4	IC25	E - 4	TP5	G - 2
D24	A - 4	IC26	F - 7	TP6	G - 2
D25	H - 4	IC27	F - 6	TP7	E - 1
D26	B - 6	IC28	F - 5	TP8	F - 1
D30	F - 7	IC29	F - 4	TP9	H - 2
D31	G - 7	IC30	H - 7	TP10	H - 4
D32	G - 7	IC31	H - 6	TP11	B - 6
D33	F - 8	IC32	H - 5	TP12	B - 7
D36	G - 2	IC33	H - 4	TP13	B - 3
D37	G - 2	IC34	H - 7	TP14	B - 1
D38	G - 1	IC100	D - 3	TP15	B - 1
D39	H - 2			TP16	H - 6
D40	G - 1	Q3	B - 1	TP17	G - 3
D41	H - 2	Q4	B - 2	TP18	F - 6
D42	B - 3	Q5	B - 2	TP19	H - 8
D43	B - 4	Q6	B - 2	TP20	D - 8
D44	C - 6	Q8	D - 7	TP21	A - 8
D45	D - 6	Q9	H - 6	TP100	B - 2
D46	F - 4	Q10	H - 6		
D47	H - 1	Q11	G - 5		
D48	H - 1	Q12	D - 2		
D49	D - 5	Q13	E - 2		
D50	D - 6	Q14	E - 2		
D51	F - 6	Q15	F - 2		
D52	E - 7	Q16	B - 2		
D53	D - 7	Q17	D - 1		
D55	H - 2	Q18	E - 1		
D56	G - 2	Q19	E - 2		
D57	G - 1	Q20	H - 7		
D58	G - 2	Q21	H - 8		
D60	D - 1	Q22	A - 3		
D65	C - 7	Q23	A - 3		
D66	C - 7	Q24	B - 4		
		Q25	A - 4		
E1	A - 8	Q26	B - 5		
E2	A - 1	Q27	A - 5		
E3	H - 1	Q28	A - 5		
E4	H - 8	Q29	A - 5		
		Q30	C - 8		
		Q31	A - 7		
		Q32	B - 7		
		Q33	D - 2		
		Q34	A - 5		

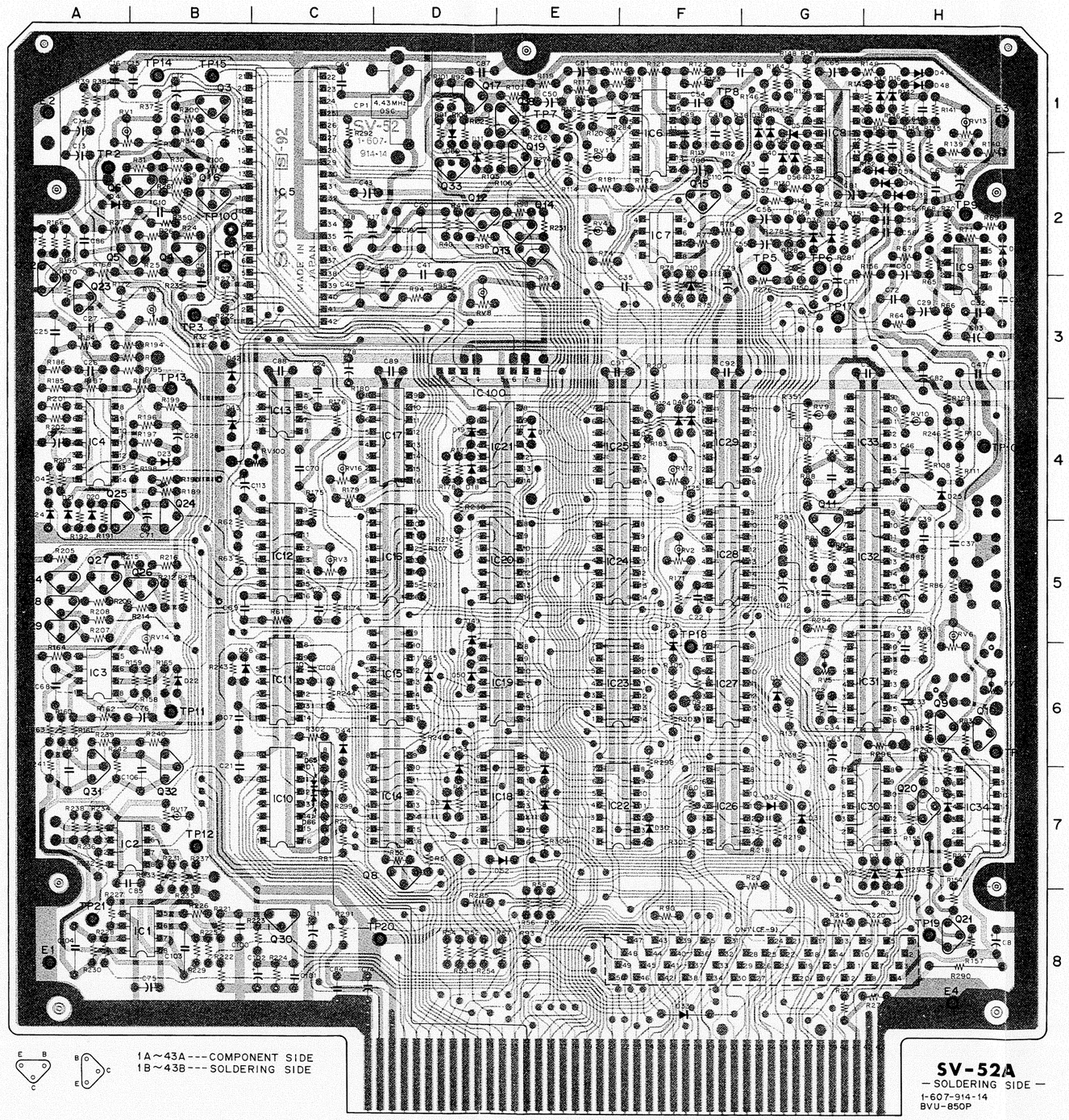

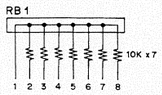

1A~43A---COMPONENT SIDE
1B~43B---SOLDERING SIDE

SV-52A
— SOLDERING SIDE —
1-607-914-14
BVU-850P

CF-9; CTL REC/PB AMP/COLOR FRAMING

CN1	C - 7	Q701	H - 7
		Q702	H - 6
D501	B - 6	Q703	A - 2
D502	F - 5	Q704	E - 5
D504	E - 6	Q705	H - 6
D505	E - 7	Q706	H - 4
D506	F - 6	Q707	D - 7
D507	A - 7	Q709	A - 3
D701	H - 1	Q710	B - 6
D702	G - 2	Q711	A - 3
E501	A - 1	RV501	G - 6
E502	H - 1	RV502	H - 5
E503	H - 7		
IC501	C - 4	TP501	E - 3
IC502	D - 4	TP502	C - 6
IC503	C - 5	TP503	D - 6
IC504	B - 4	TP504	E - 5
IC505	C - 5	TP505	D - 5
IC506	B - 5	TP506	E - 6
IC507	D - 5	TP507	D - 7
IC508	E - 4	TP508	G - 6
IC509	E - 5	TP509	D - 6
IC510	F - 6	TP510	A - 6
IC511	E - 5	TP701	H - 6
IC512	D - 5	TP702	H - 4
IC513	D - 6	TP703	C - 2
IC514	E - 6	TP704	H - 3
IC515	G - 5	TP705	F - 3
IC516	F - 5	TP706	G - 1
IC517	G - 4	TP707	A - 2
IC518	G - 6	TP708	A - 3
IC519	C - 6	TP710	H - 5
IC520	A - 6	TP711	H - 3
IC521	A - 5	TP712	H - 2
IC522	A - 5	TP713	H - 4
IC523	A - 4	TP714	D - 2
IC524	A - 4	TP715	D - 2
IC525	F - 4	TP716	D - 1
IC526	B - 5	TP717	B - 3
IC701	H - 7	TP718	C - 3
IC702	H - 6	TP719	B - 7
IC703	H - 5	TP720	C - 1
IC704	H - 4	TP721	C - 3
IC705	H - 4		
IC706	G - 5		
IC707	F - 4		
IC708	H - 2		
IC709	H - 1		
IC710	H - 2		
IC711	H - 1		
IC712	G - 2		
IC713	G - 1		
IC714	G - 2		
IC715	G - 1		
IC716	F - 2		
IC717	E - 2		
IC718	E - 1		
IC719	E - 2		
IC720	E - 1		
IC721	D - 2		
IC722	D - 1		
IC723	D - 2		
IC724	D - 1		
IC725	C - 2		
IC726	C - 1		
IC727	B - 2		
IC728	B - 1		
IC729	B - 2		
IC730	B - 1		
IC731	A - 1		
Q501	E - 7		
Q502	F - 4		
Q503	F - 7		
Q504	F - 7		
Q505	F - 7		
Q506	E - 7		
Q507	B - 7		
Q508	B - 7		
Q509	B - 7		
Q510	C - 6		
Q511	C - 4		

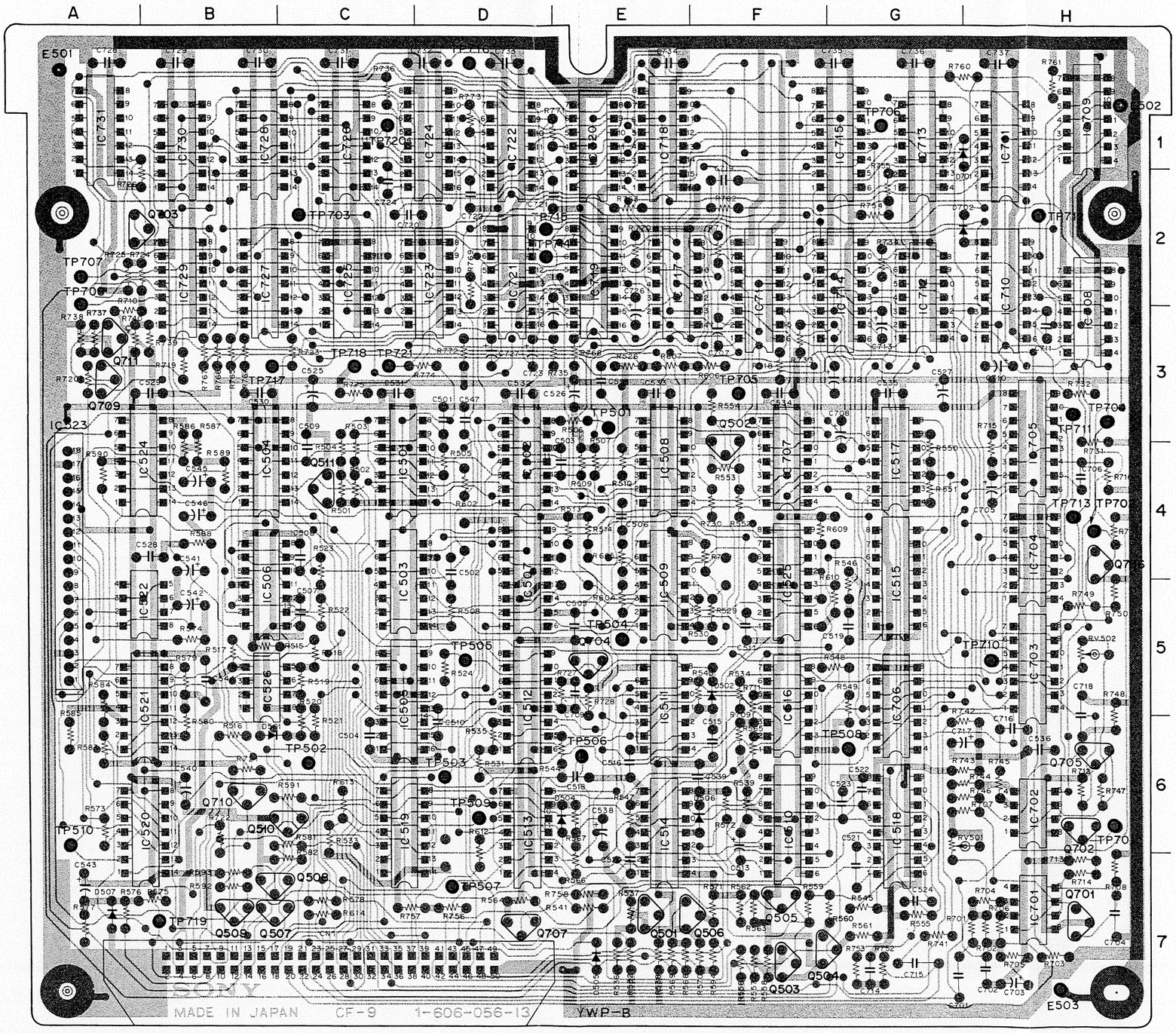

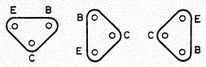

CF-9 -SOLDERING SIDE-
1-606-056-14
BVU-850P

SP537 / Druck 136

RS-3; REEL SERVO

D1	C-8	IC1	C-7	RV1	A-7
D2	C-7	IC2	D-7	RV2	A-6
D3	C-8	IC3	C-6		
D4	C-5	IC4	D-6	TP1	C-7
D5	C-8	IC5	C-5	TP2	C-6
D6	D-8	IC6	C-5	TP3	H-8
D7	C-7	IC7	F-5	TP4	A-8
D8	C-6	IC8	B-6	TP5	A-8
D9	C-1	IC9	A-6	TP6	E-6
D10	F-1	IC10	D-5	TP7	D-7
D11	E-3	IC11	B-8	TP8	C-7
D12	D-5	IC12	C-1	TP9	H-7
D13	D-4	IC13	D-1	TP10	B-5
D14	E-4	IC14	F-3	TP11	B-7
D15	E-6	IC15	E-3	TP12	E-5
D16	I-5	IC16	D-3	TP13	E-1
D17	I-4	IC17	D-5	TP14	D-5
D18	I-6	IC18	E-4	TP15	E-3
D19	I-6	IC19	F-4	TP16	A-2
D20	H-8	IC20	E-5	TP17	B-1
D21	E-8	IC21	F-5	TP18	A-3
D22	B-1	IC22	E-5	TP19	A-6
D23	A-1	IC23	F-6	TP20	C-8
D24	A-1	IC24	G-6	TP21	C-8
D25	A-2	IC25	H-6	TP22	E-8
D26	A-3	IC26	H-7	TP23	E-7
D27	A-3	IC27	H-5	TP24	B-8
D28	A-3	IC28	H-5	TP25	I-3
D29	A-3	IC29	F-7		
D30	A-5	IC30	G-5		
D31	A-5	IC31	G-3		
D32	A-4	IC32	G-5		
D33	A-4	IC33	H-4		
D34	A-4	IC34	H-3		
D35	A-4	IC35	G-2		
D36	A-4	IC36	G-4		
D37	A-4	IC37	G-1		
D38	C-2	IC38	F-2		
D39	C-4	IC39	F-1		
D40	E-6	IC40	E-2		
D41	G-7	IC41	D-2		
D42	G-7	IC42	C-2		
D43	C-7	IC43	C-3		
D44	C-8	IC44	C-4		
D45	D-8	IC45	B-1		
D46	D-7	IC46	A-6		
D47	C-7	IC47	B-3		
D48	C-8	IC48	E-7		
D49	D-8	IC49	E-6		
D50	D-7	IC50	H-2		
D51	H-2	IC51	H-1		
D52	I-3				
D53	H-2	Q1	E-1		
D54	I-3	Q2	D-3		
D55	I-3	Q3	D-3		
D56	F-1	Q4	H-8		
D57	B-4	Q5	B-2		
D58	B-3	Q6	A-2		
D59	B-3	Q7	A-2		
D60	B-3	Q8	B-2		
D61	H-6	Q9	B-2		
D62	A-5	Q10	B-3		
D63	A-4	Q11	A-3		
D64	C-8	Q12	B-4		
D65	A-7	Q13	A-4		
D66	A-5	Q14	A-4		
D67	H-1	Q15	A-5		
D68	G-2	Q16	B-4		
D69	B-1	Q17	B-4		
D70	B-5	Q18	A-4		
D71	D-2	Q19	E-1		
D72	G-1	Q20	E-7		
D73	G-1				
D74	E-5				
D75	E-5				
E1	B-8				
E2	I-8				
E3	H-1				

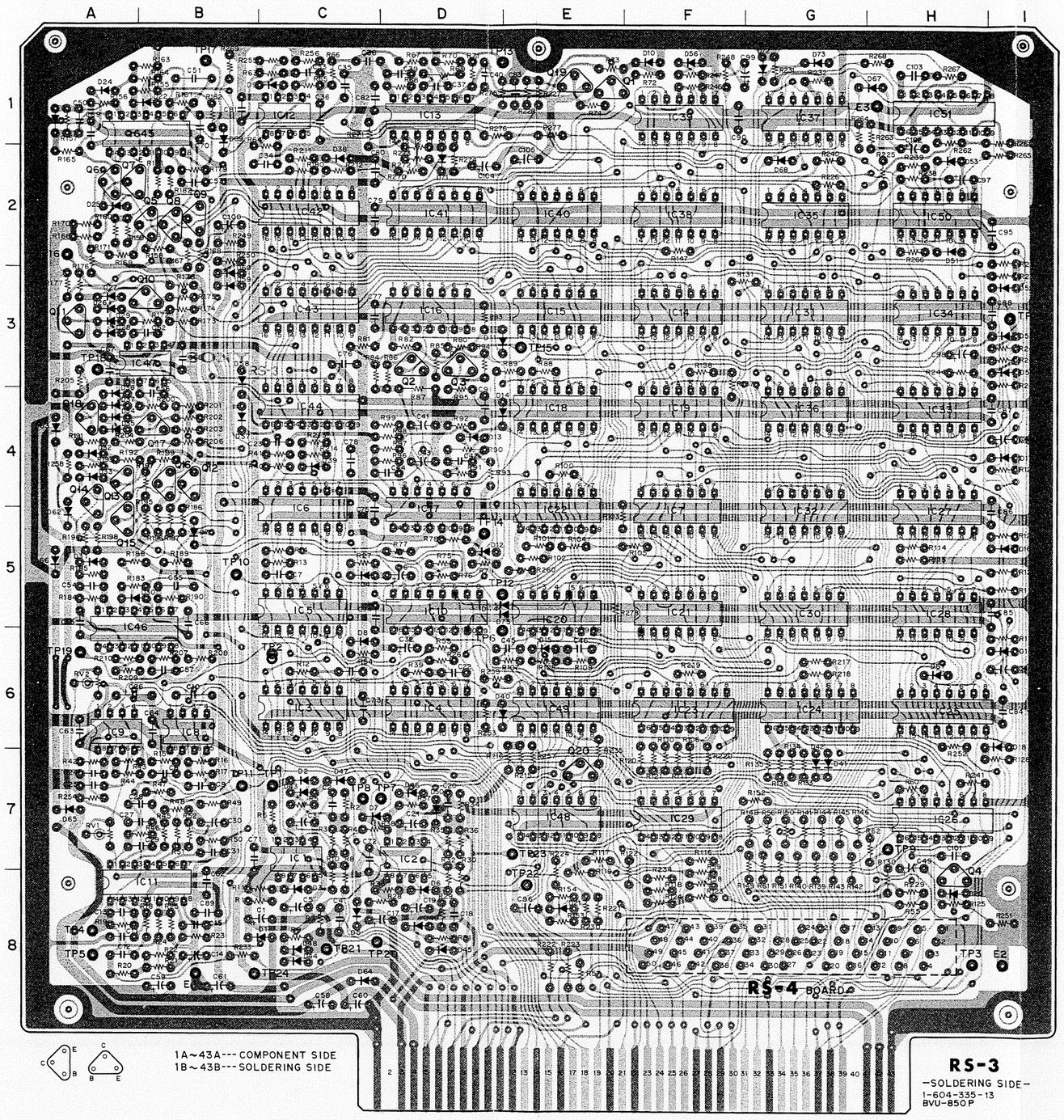

RS-4; TAPE TENSION SERVO

D501	G - 6	IC519	E - 1		
D502	H - 6	IC520	C - 2		
D503	B - 3	IC521	D - 2		
D504	B - 1	IC522	A - 2		
D505	C - 3	IC523	C - 1		
D507	C - 2	IC524	D - 1		
D509	B - 3	IC525	A - 1		
D510	A - 3	IC526	E - 3		
D511	A - 4	IC527	F - 4		
D512	B - 4	IC528	F - 2		
D513	A - 5	IC529	H - 2		
D514	C - 3	IC530	E - 5		
D515	D - 3	IC531	F - 1		
D516	C - 4	IC532	E - 2		
D517	C - 3	IC533	B - 6		
D519	E - 7	IC534	A - 6		
D520	C - 6	IC535	A - 5		
D521	E - 1	IC536	C - 3		
D522	E - 2	IC537	D - 3		
D523	E - 1	IC538	B - 5		
D524	E - 1	IC539	C - 5		
D525	B - 6	IC540	C - 6		
D526	D - 6	IC541	B - 3		
D527	D - 5	IC542	D - 6		
D528	E - 5	IC543	C - 5		
D529	F - 2	IC544	E - 6		
D530	B - 4	IC545	D - 5		
D531	B - 4	IC546	C - 6		
D532	C - 3				
D533	C - 4	Q501	H - 3		
D534	B - 4	Q502	H - 4		
D535	C - 2	Q503	H - 1		
D536	D - 3	Q504	H - 1		
D537	F - 3	Q507	F - 2		
D538	C - 1				
D539	D - 2	RV501	F - 7		
D540	E - 4	RV502	G - 7		
D541	E - 2	RV503	G - 7		
D542	E - 3	RV504	H - 7		
D543	A - 3				
D544	H - 7	TP501	F - 7		
D546	F - 1	TP502	G - 7		
D547	F - 2	TP503	G - 4		
D548	G - 3	TP504	H - 4		
D549	F - 3	TP505	H - 4		
		TP506	G - 2		
E501	A - 7	TP507	C - 2		
E502	G - 4	TP508	C - 1		
		TP509	E - 1		
IC501	F - 7	TP510	E - 2		
IC502	F - 6	TP511	H - 2		
IC503	F - 5	TP512	E - 7		
IC504	E - 5	TP513	E - 7		
IC505	G - 7	TP514	D - 7		
IC506	G - 6	TP515	F - 7		
IC507	H - 5	TP516	H - 7		
IC508	G - 5	TP517	G - 7		
IC509	G - 6	TP518	H - 7		
IC510	H - 6	TP519	H - 6		
IC511	E - 6	TP520	H - 6		
IC512	E - 7	TP521	H - 4		
IC513	G - 5				
IC514	G - 2				
IC515	G - 4				
IC516	G - 2				
IC517	G - 1				
IC518	E - 3				

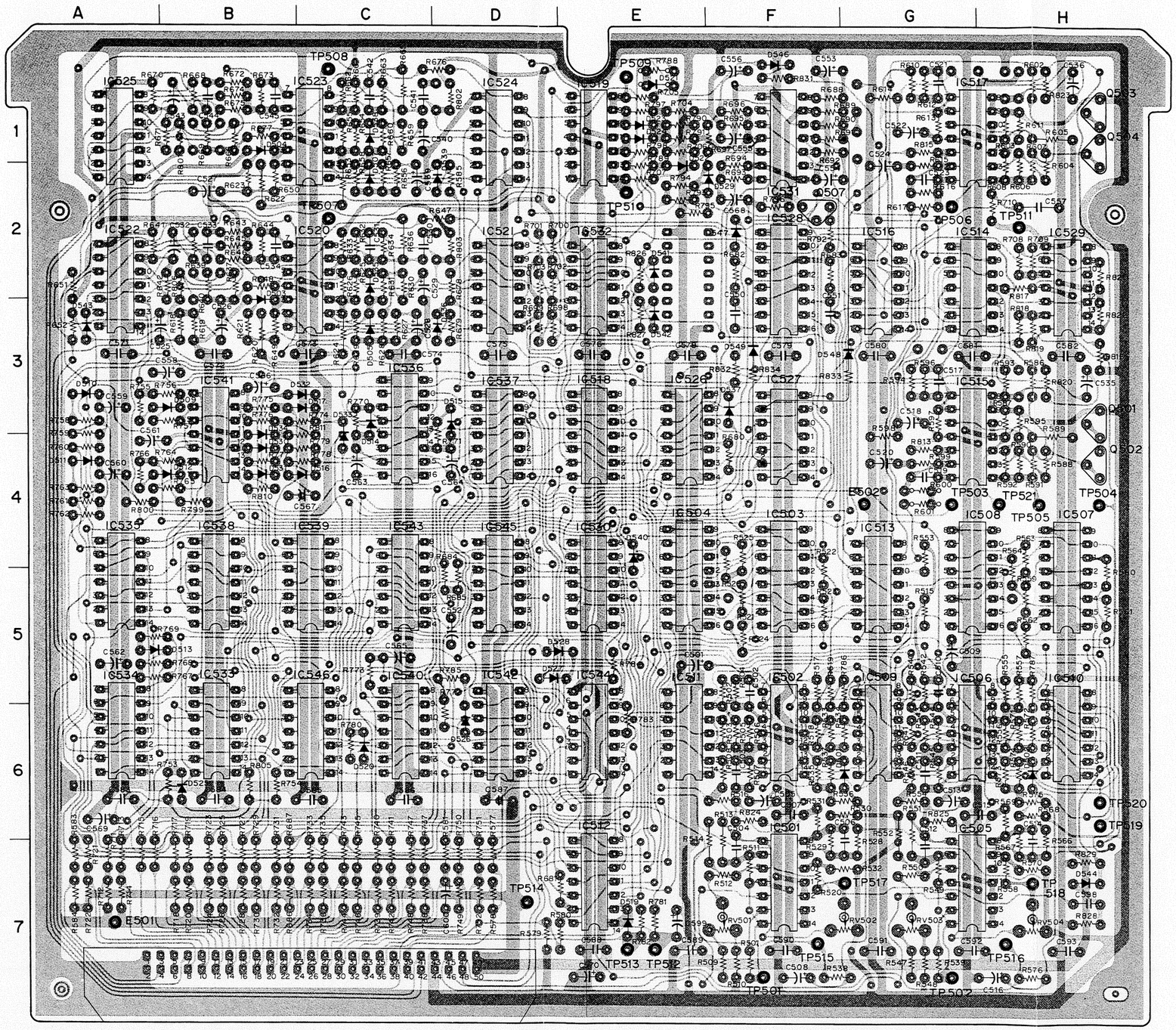

RS-4 —SOLDERING SIDE—
1-604-336-14
BVU-850P

SP537 / Druck 140

PD-14, DR-9(1). (2), PD-15(1). (2), PD-17, PD-21, DR-8

PD-14; REGULATOR
DR-9(1), (2); REEL MOTOR DRIVER
PD-15(1), (2); REG +12V/+5V
PD-17; UNREG
PD-21; REG –12V
DR-8; CAPSTAN MOTOR DRIVER

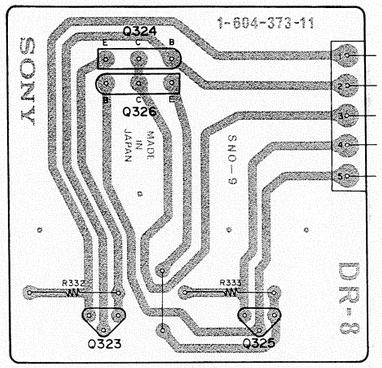

DR-8 -SOLDERING SIDE-
1-604-373-11
BVU-850P

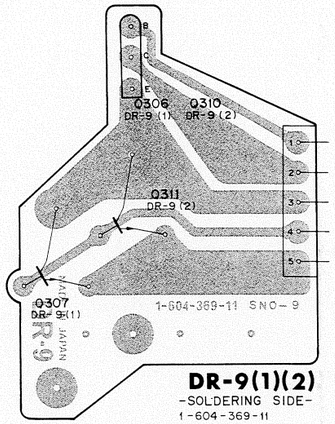

DR-9(1)(2)
-SOLDERING SIDE-
1-604-369-11
BVU-850P

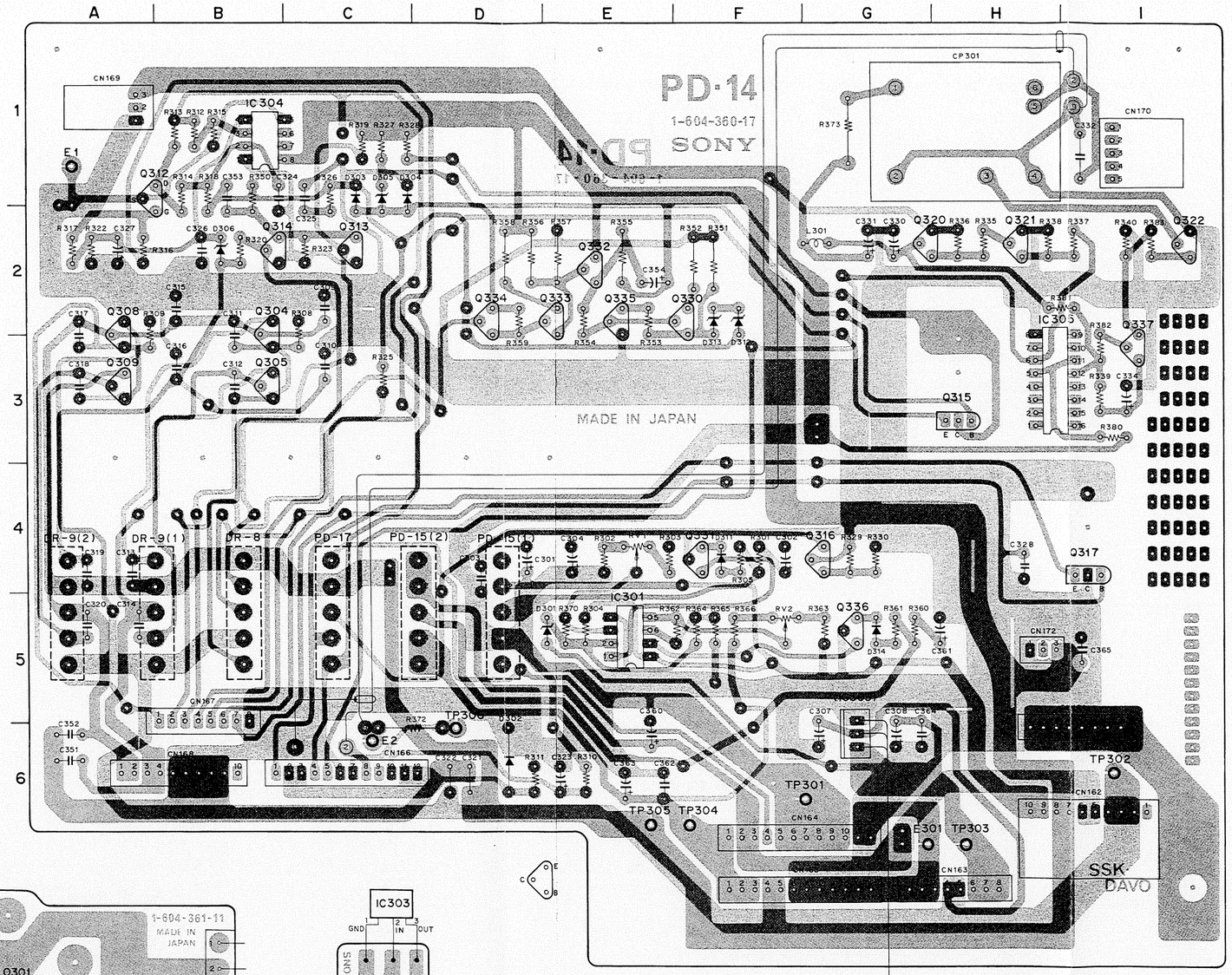

PD-14 -SOLDERING SIDE-
1-604-360-17
BVU-850P

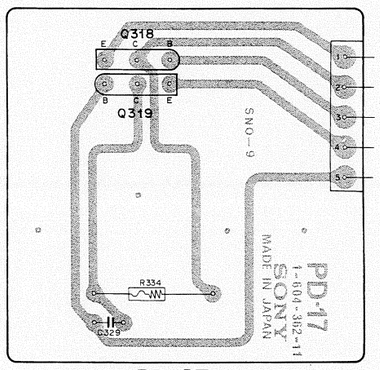

PD-17 -SOLDERING SIDE-
1-604-362-11
BVU-850P

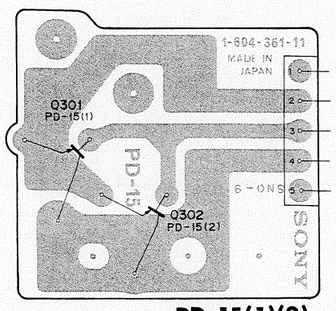

PD-15(1)(2)
-SOLDERING SIDE-
1-604-361-11
BVU-850P

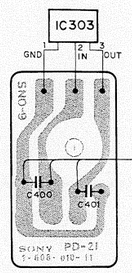

PD-21
-SOLDERING SIDE-
1-608-010-11
BVU-850P

CN161 I -5
CN162 I -6
CN163 H -6
CN164 F -6
CN165 F -6
CN166 C -6
CN167 B -5
CN168 B -6
CN169 A -1
CN170 I -1
CN172 H -5

CP301 H -1

D301 D -5
D302 D -6
D303 C -1
D304 C -1
D305 C -1
D306 B -2
D311 F -4
D312 F -2
D313 F -2
D314 G -5

E1 A -1
E2 C -6
E301 G -6

IC301 E -5
IC303 (G -5)
IC304 B -1
IC305 H -3

Q304 B -2
Q305 B -3
Q308 A -2
Q309 A -3
Q312 B -1
Q313 C -2
Q314 B -2
Q315 H -3
Q316 G -4
Q317 I -4
Q320 H -2
Q321 H -2
Q322 I -2
Q330 F -2
Q331 F -4
Q332 E -2
Q333 E -2
Q334 D -2
Q335 E -2
Q336 G -5
Q337 I -3

RV1 E -4
RV2 F -5

TP301 G -6
TP302 I -6
TP303 H -6
TP304 F -6
TP305 E -6
TP306 D -6

SP537 / Druck 142

PW-50, PW-79, FU-16

PW-50; AC RECTIFIER
PW-79; SWITCHING REGULATOR
FU-16; FUSE

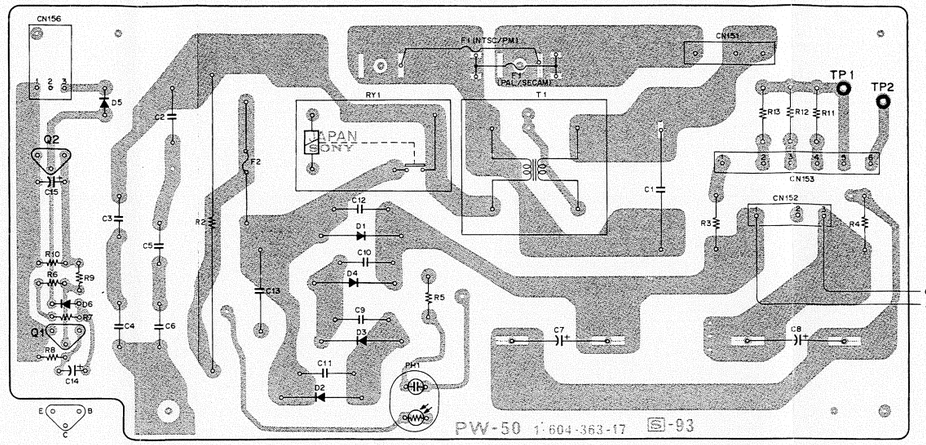

PW-50 -SOLDERING SIDE-
1-604-363-17
BVU-850P

FU-16 -COMPONENT SIDE-
1-605-936-13
BVU-850P

PW-79 -SOLDERING SIDE-
1-604-555-14
BVU-850P

KY-9, KY-14, DP-9, PC-9, PC-14

KY-9; FUNCTION KEY
KY-14; TRIM/ENTRY SW
DP-9; DISPLAY
PC-9; DIAL DETECTOR
PC-14; JOG DETECTOR

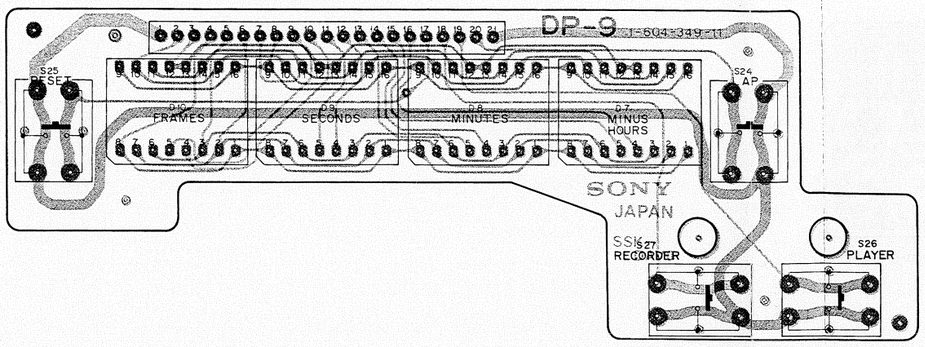

DP-9 -SOLDERING SIDE-
1-604-349-12
BVU-850P

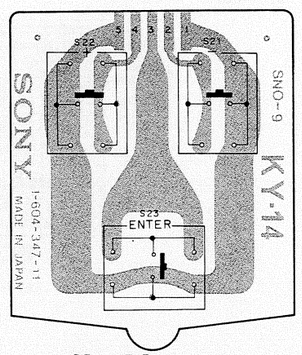

KY-14 -SOLDERING SIDE-
1-604-347-12
BVU-850P

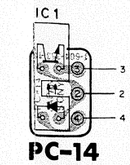

PC-14
-SOLDERING SIDE-
1-604-353-11
BVU-850P

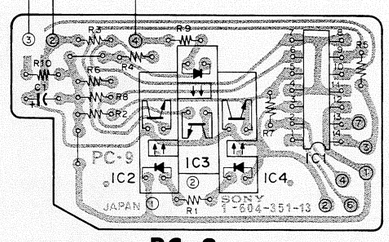

PC-9 -SOLDERING SIDE-
1-604-351-13
BVU-850P

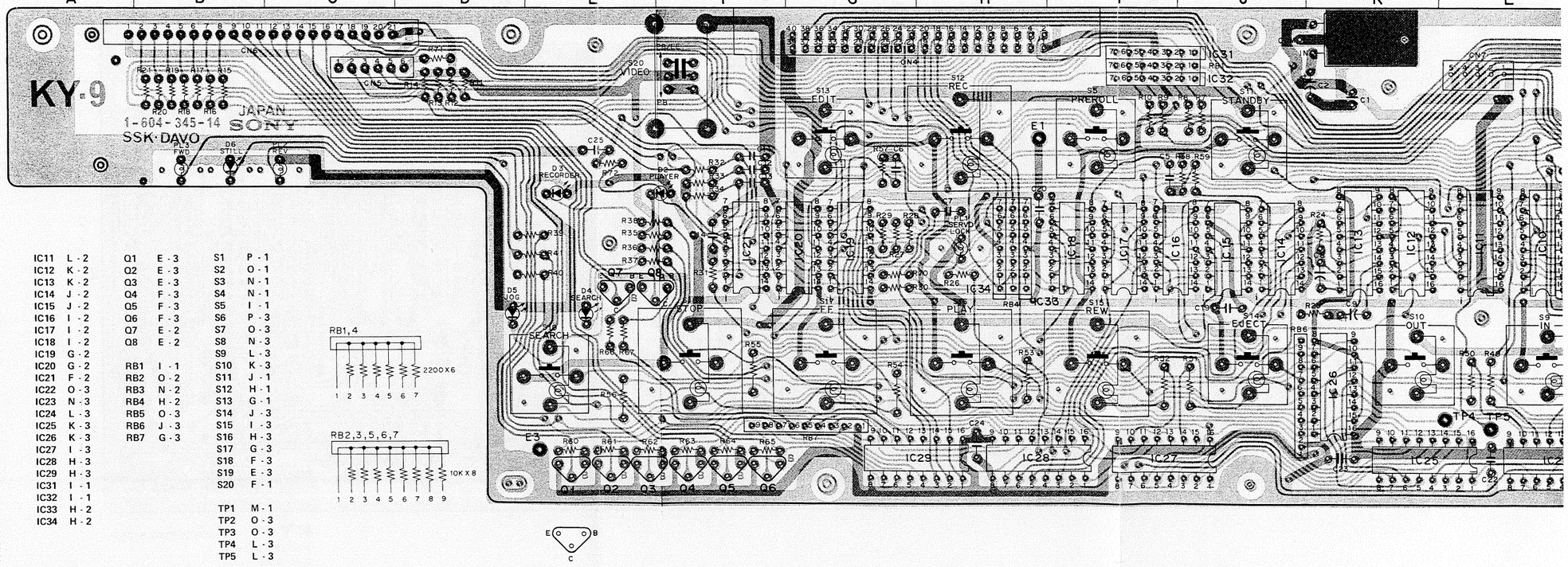

CN4	G-1	IC11	L-2	Q1	E-3	S1	P-1		
CN5	C-1	IC12	K-2	Q2	E-3	S2	O-1		
CN6	B-1	IC13	K-2	Q3	E-3	S3	N-1		
CN7	L-1	IC14	J-2	Q4	F-3	S4	N-1		
		IC15	J-2	Q5	F-3	S5	I-1		
D1	N-2	IC16	I-2	Q6	F-3	S6	P-3		
D2	E-2	IC17	I-2	Q7	E-2	S7	O-3		
D3	E-2	IC18	I-2	Q8	E-2	S8	N-3		
D4	E-2	IC19	G-2			S9	L-3		
D5	D-2	IC20	G-2	RB1	I-1	S10	K-3		
D6	B-1	IC21	F-2	RB2	O-2	S11	J-1		
		IC22	O-3	RB3	N-2	S12	H-1		
E1	H-1	IC23	N-3	RB4	H-2	S13	G-1		
E2	P-3	IC24	L-3	RB5	O-3	S14	J-3		
E3	E-3	IC25	K-3	RB6	J-3	S15	I-3		
		IC26	K-3	RB7	G-3	S16	H-3		
IC1	N-1	IC27	I-3			S17	G-3		
IC2	K-1	IC28	H-3			S18	F-3		
IC3	P-2	IC29	H-3			S19	E-3		
IC4	O-2	IC31	I-1			S20	F-1		
IC5	O-2	IC32	I-1						
IC6	N-2	IC33	H-2			TP1	M-1		
IC7	N-2	IC34	H-2			TP2	O-3		
IC8	M-2					TP3	O-3		
IC9	M-2					TP4	L-3		
IC10	L-2					TP5	L-3		

-9 -SOLDERING SIDE-
04-349-12
·850P

KY-14 -SOLDERING SIDE-
1-604-347-12
BVU-850P

PC-14
-SOLDERING SIDE-
1-604-353-11
BVU-850P

PC-9 -SOLDERING SIDE-
1-604-351-13
BVU-850P

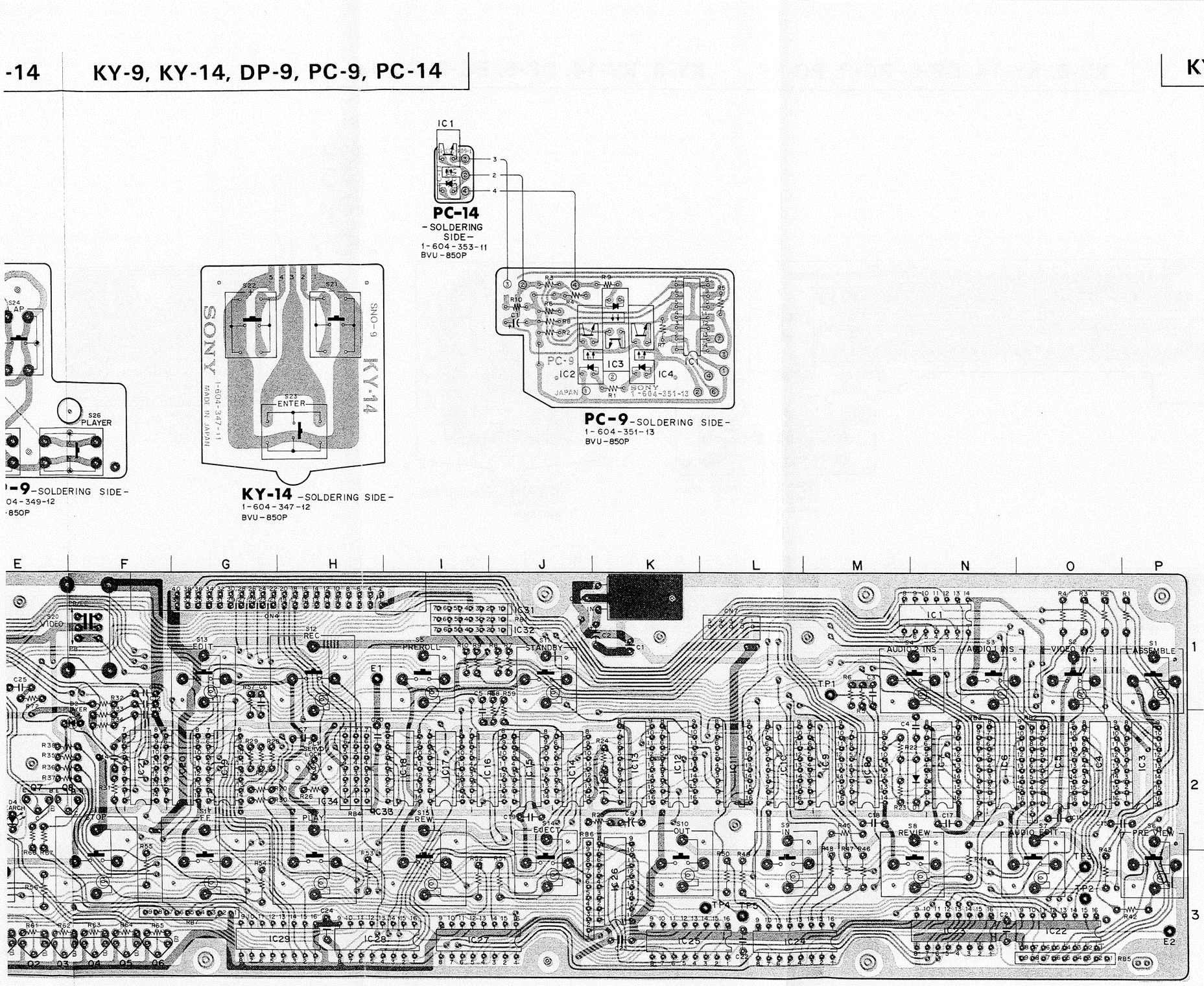

KY-9 -SOLDERING SIDE-
1-604-345-14
BVU-850P

TC-13; TIME CODE REC/PB AMPLIFIER
CTL COUNTER
SERVO REF SYNC SELECTOR

D101	E - 7
D102	E - 7
D103	C - 6
D104	C - 6
D201	F - 7
D202	F - 7
D203	F - 7
D204	G - 7
D205	F - 7
E101	B - 7
E102	D - 5
IC1	G - 2
IC2	F - 2
IC3	G - 3
IC4	F - 3
IC5	G - 4
IC6	F - 4
IC7	D - 4
IC8	F - 1
IC9	E - 1
IC10	D - 3
IC11	G - 1
IC12	D - 2
IC13	H - 1
IC14	H - 2
IC15	H - 3
IC16	H - 4
IC17	E - 3
IC18	E - 2
IC19	E - 4
IC20	D - 1
IC101	B - 6
IC102	C - 5
IC103	C - 5
IC104	B - 7
IC201	G - 7
IC202	F - 6
IC203	F - 5
IC204	G - 5
IC205	G - 6
IC206	F - 5
IC207	G - 5
Q101	E - 7
Q102	D - 7
Q103	D - 7
Q104	C - 7
Q105	C - 8
Q107	D - 7
Q108	D - 6
Q109	D - 6
Q110	D - 5
Q111	D - 4
Q112	F - 4
Q113	E - 5
Q114	E - 5
Q116	C - 8
Q201	F - 7
Q250	H - 5
Q251	H - 7
RV101	D - 7
RV102	C - 6
RV103	C - 7
TP101	C - 8
TP102	E - 5
TP103	F - 4
TP104	C - 6
TP105	B - 7

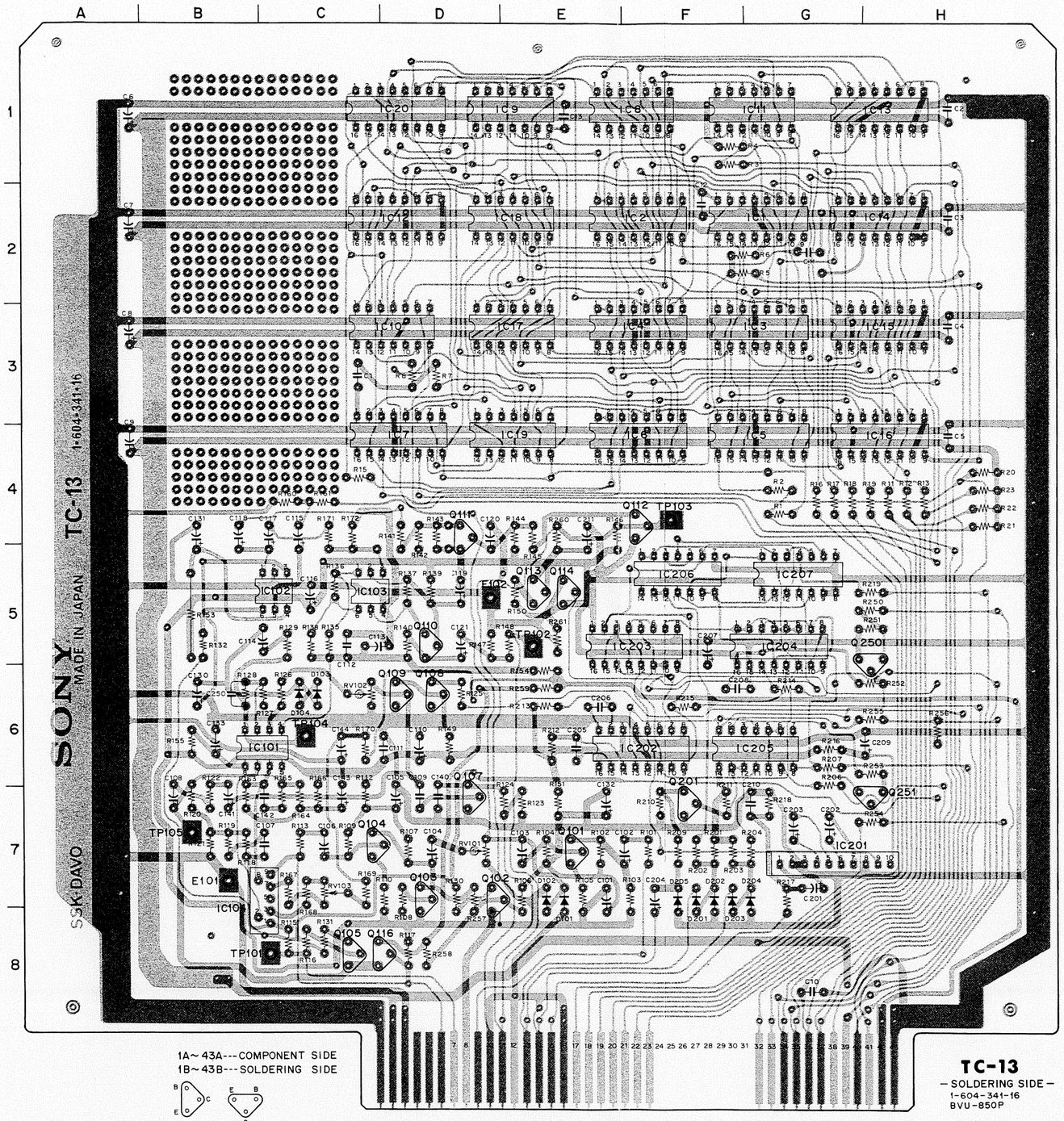

SY-36; FUNCTION SYSTEM CONTROL

D1	F - 6	IC21	F - 4		
D2	D - 5	IC22	E - 4		
D3	E - 6	IC23	D - 4		
D4	F - 6	IC24	C - 4		
D5	F - 8	IC25	B - 4		
D6	E - 6	IC26	A - 4		
D7	C - 10	IC27	G - 5		
D8	A - 10	IC28	F - 5		
D9	A - 11	IC29	E - 5		
D10	C - 4	IC30	D - 5		
D11	B - 2	IC31	C - 5		
D12	C - 5	IC32	B - 5		
D13	B - 7	IC33	A - 5		
D14	A - 5	IC34	G - 6		
D15	F - 10	IC35	F - 6		
D16	C - 7	IC36	E - 6		
D20	A - 9	IC37	D - 6		
D21	A - 9	IC38	C - 6		
D22	B - 6	IC39	B - 6		
D23	B - 6	IC40	A - 6		
D25	D - 4	IC41	G - 7		
D26	E - 3	IC42	F - 7		
D27	E - 2	IC43	E - 7		
D30	G - 2	IC44	D - 7		
D31	D - 5	IC45	C - 7		
D33	B - 2	IC46	B - 7		
D34	E - 3	IC47	A - 7		
D35	C - 6	IC48	G - 8		
D37	D - 1	IC49	F - 8		
D38	F - 4	IC50	E - 8		
D39	A - 3	IC51	D - 8		
D40	A - 3	IC52	C - 8		
D41	E - 2	IC53	B - 8		
D42	D - 2	IC54	A - 8		
D43	F - 2	IC55	G - 9		
D44	F - 2	IC56	F - 9		
D45	E - 2	IC57	E - 9		
D46	E - 2	IC58	D - 9		
D47	F - 2	IC59	C - 9		
D48	F - 2	IC60	B - 9		
D49	F - 3	IC61	A - 9		
D50	F - 3	IC62	G - 10		
D51	E - 4	IC63	F - 10		
D52	E - 6	IC64	E - 10		
D53	E - 3	IC65	D - 10		
D54	E - 2	IC66	C - 10		
D55	G - 6	IC67	A - 10		
D56	F - 10	IC68	G - 11		
D57	E - 4	IC69	F - 11		
D58	G - 2	IC70	E - 11		
D59	G - 3	IC71	D - 11		
		IC72	C - 11		
E1	A - 2	IC73	B - 11		
		IC74	C - 2		
IC1	G - 1				
IC2	F - 1	Q1	G - 3		
IC3	E - 1	Q2	G - 2		
IC4	D - 1	Q3	G - 2		
IC5	C - 1				
IC6	B - 1	RB1	G - 4		
IC7	G - 2	RB2	G - 7		
IC8	F - 2	RB3	G - 9		
IC9	E - 2	RB4	G - 8		
IC10	D - 2	RB5	G - 7		
IC11	B - 2	RB6	G - 9		
IC12	A - 2	RB7	G - 5		
IC13	G - 3	RB8	G - 10		
IC14	F - 3	RB9	C - 10		
IC15	E - 3				
IC16	D - 3	RV1	E - 9		
IC17	C - 3	RV2	G - 6		
IC18	B - 3	RV3	D - 9		
IC19	A - 3				
IC20	G - 4	TP1	F - 10		

RB1

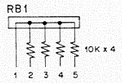

RB2,3,4

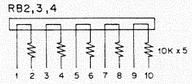

RB5,6,7,8,9

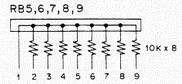

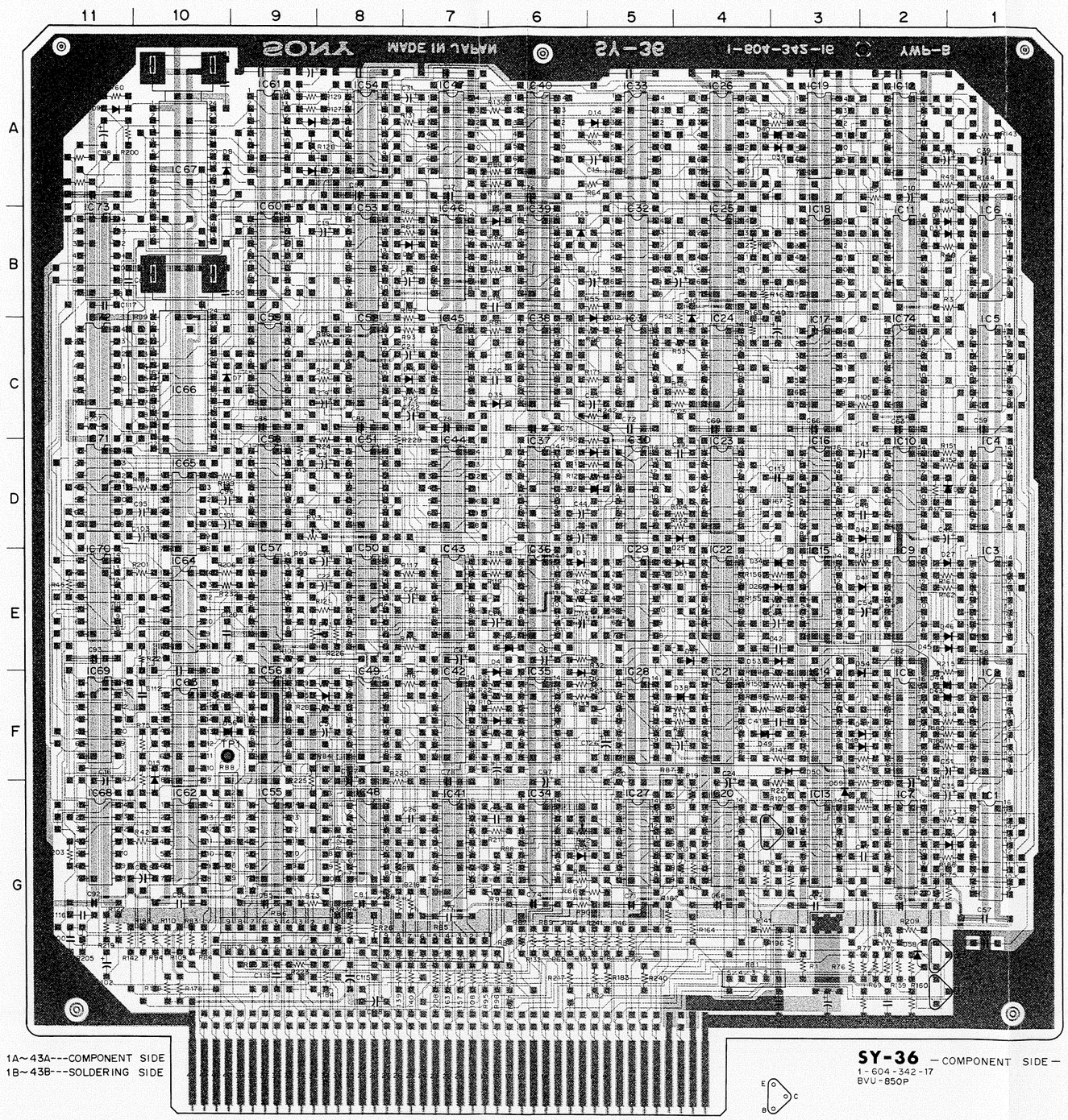

1A~43A---COMPONENT SIDE
1B~43B---SOLDERING SIDE

SY-36 — COMPONENT SIDE —
1-604-342-17
BVU-850P

SY-37A; MICRO PROCESSOR

CN31	B - 1	Q1	A - 6
CN32	E - 1	Q2	B - 6
		Q3	G - 6
D1	A - 6	Q4	G - 6
D2	G - 3		
D3	G - 2	RB1	F - 2
D5	F - 2	RB2	F - 1
D7	G - 5	RB3	B - 1
D8	F - 6	RB4	C - 1
D9	B - 1	RB5	D - 6
D10	G - 6	RB6	D - 6
		RB7	F - 6
E1	G - 6	RB8	E - 6
E2	G - 1	RB10	F - 6
E3	A - 6	RB11	C - 2
		RB13	D - 2
IC1	E - 1	RB15	E - 6
IC2	D - 1		
IC4	E - 1	S1	G - 1
IC5	F - 2	S2	A - 1
IC8	C - 2	S3	D - 1
IC9	F - 4	S5	G - 1
IC10	D - 3		
IC11	G - 6	TP1	A - 1
IC12	B - 3	TP2	G - 5
IC14	C - 6	TP3	G - 3
IC15	C - 4	TP4	G - 3
IC16	G - 5	TP5	G - 3
IC17	F - 3		
IC18	D - 6	X1	A - 1
IC19	C - 6		
IC20	B - 5		
IC21	F - 5		
IC22	F - 4		
IC23	B - 4		
IC24	B - 6		
IC25	A - 5		
IC26	B - 5		
IC27	A - 1		
IC28	A - 3		
IC29	D - 6		
IC30	B - 6		
IC31	E - 3		
IC32	C - 5		
IC33	E - 3		
IC34	B - 3		
IC35	E - 6		
IC36	A - 6		
IC37	C - 4		
IC38	C - 5		
IC39	F - 3		
IC40	F - 6		
IC41	A - 6		
IC42	E - 4		
IC43	E - 5		
IC44	B - 4		
IC45	G - 3		
IC46	E - 6		
IC48	E - 4		
IC49	E - 5		
IC50	A - 4		
IC51	A - 2		
IC52	F - 6		
IC53	D - 4		
IC54	D - 5		
IC55	A - 4		
IC56	F - 5		
IC57	D - 4		
IC58	D - 5		
IC59	A - 5		
IC61	C - 1		
IC62	C - 1		
IC63	B - 1		
IC64	B - 1		
IC65	C - 3		
IC66	C - 3		
IC70	D - 3		
IC71	G - 4		
IC73	A - 3		
IC74	A - 2		
IC75	B - 2		

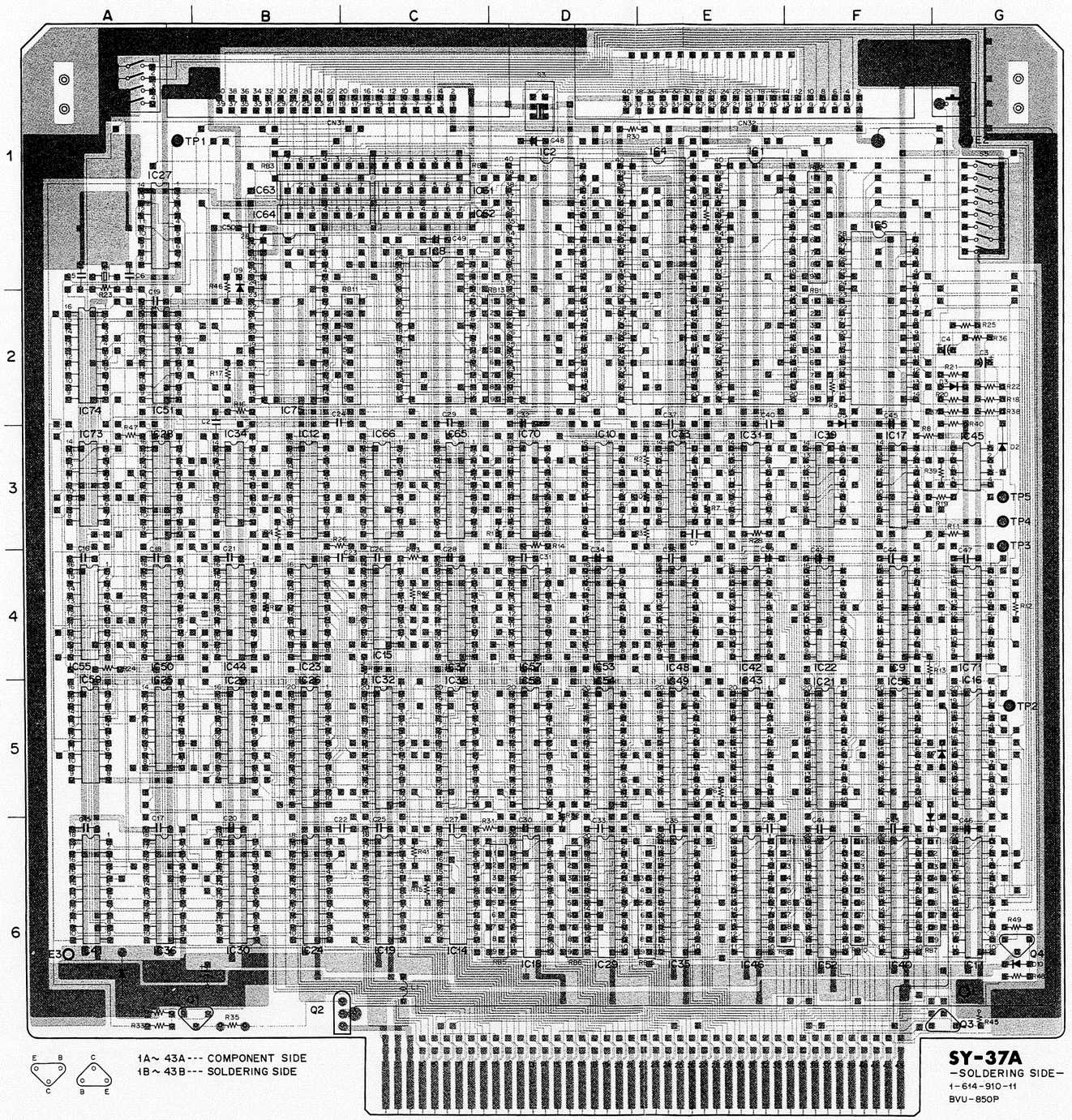

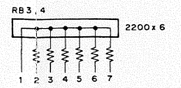

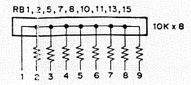

SY-71, EK-2(B), TM-8

SY-71; MOTOR/SOLENOID DRIVER
EK-2(B); THREAD END DETECTOR
TM-8; THREAD MOTOR

CN1	H - 4	D24	G - 2	IC1	B - 4	Q29	B - 3
CN2	F - 4	D25	F - 3			Q30	A - 3
CN3	E - 4	D26	E - 3	Q1	H - 2	Q31	E - 4
CN4	E - 4	D28	A - 4	Q2	H - 3	Q32	F - 4
CN5	B - 4	D29	C - 2	Q3	H - 3	Q33	B - 1
CN6	A - 4	D31	D - 2	Q4	G - 2	Q34	A - 1
		D33	D - 3	Q5	H - 3	Q35	B - 2
D1	A - 4	D34	D - 4	Q6	H - 3	Q36	B - 1
D2	B - 4	D35	D - 4	Q7	H - 3	Q37	A - 1
D3	B - 4	D37	B - 3	Q8	G - 3	Q38	B - 3
D4	B - 4	D38	A - 3	Q9	H - 4	Q39	B - 2
D5	A - 4	D39	A - 4	Q10	G - 4	Q40	B - 1
D6	A - 4	D40	F - 4	Q11	F - 2	Q41	B - 2
D7	H - 2	D41	B - 1	Q12	G - 4	Q42	B - 2
D8	H - 3	D42	B - 2	Q13	F - 2	Q52	F - 3
D9	H - 3	D43	C - 2	Q14	E - 2	Q53	F - 3
D10	H - 3	D44	B - 2	Q15	F - 3		
D11	G - 2	D45	A - 1	Q16	F - 3		
D12	H - 3	D46	B - 2	Q17	G - 3		
D13	H - 2	D47	B - 1	Q18	E - 3		
D14	H - 2	D48	B - 1	Q19	D - 2		
D15	H - 3	D49	B - 2	Q20	D - 2		
D16	G - 3	D50	A - 2	Q21	C - 2		
D18	F - 3	D52	A - 3	Q22	D - 2		
D19	G - 3	D53	B - 4	Q23	D - 2		
D20	F - 3	D54	F - 2	Q24	C - 2		
D21	E - 2	D55	F - 2	Q25	D - 3		
D22	F - 3	D56	D - 1	Q26	D - 3		
D23	G - 2	D57	D - 2	Q27	C - 3		
		D58	D - 3	Q28	A - 4		

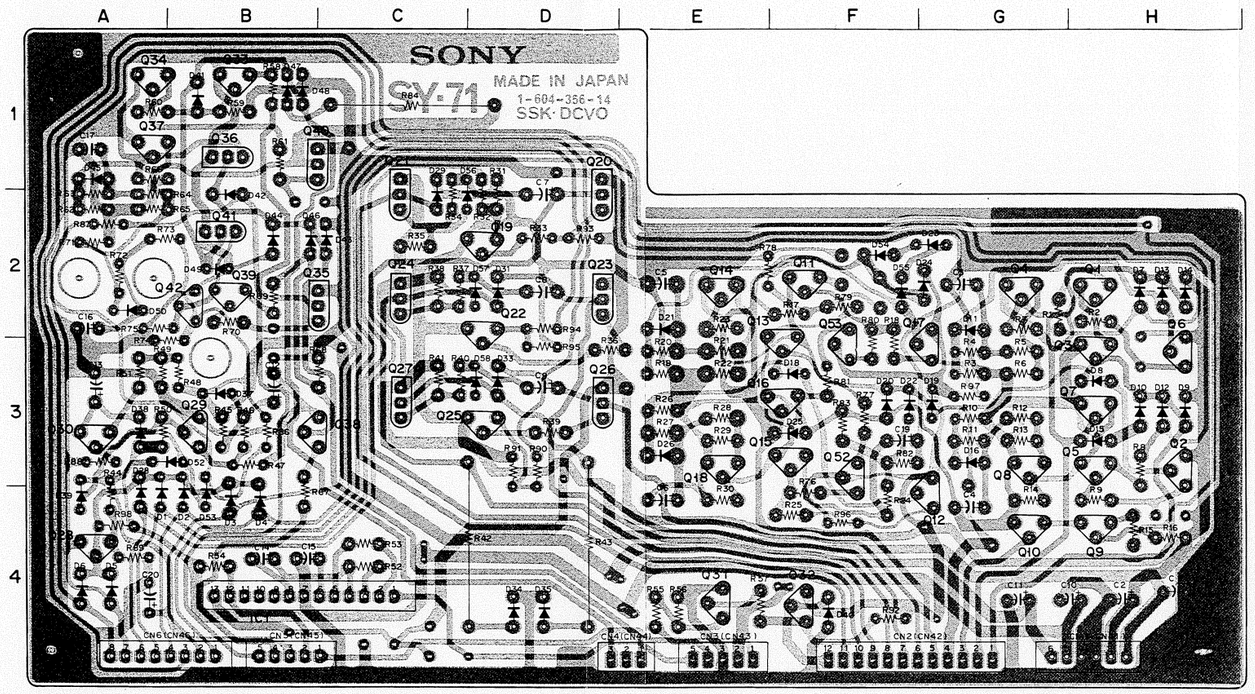

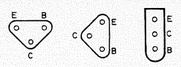

SY-71 — SOLDERING SIDE —
1-604-356-14
BVU-850P

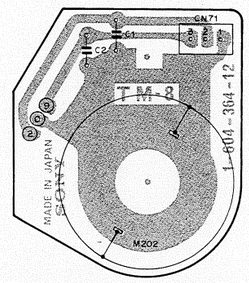

TM-8 —SOLDERING SIDE—
1-604-364-14
BVU-850P

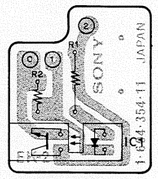

EK-2(B)
—SOLDERING SIDE—
1-604-354-12
BVU-850P

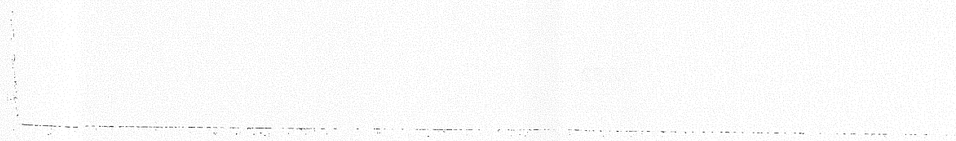

LP-33; AUDIO REC/PB LEVEL CONTROL
PR-33; REMOTE SELECT
MS-5(E); REMOTE/LOCAL SW
LMP-1; WARNING LAMP

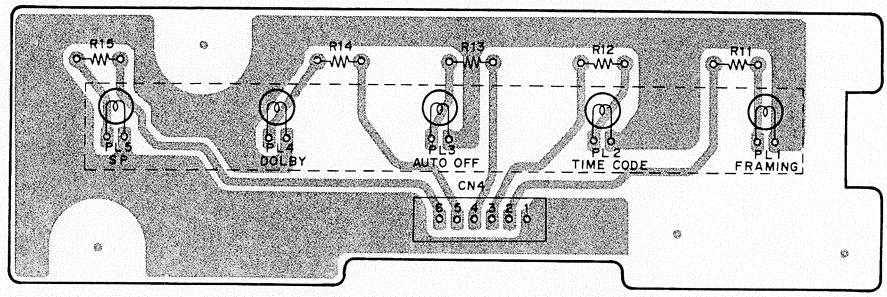

LMP-1 – SOLDERING SIDE –
1-614-831-11
BVU-850P

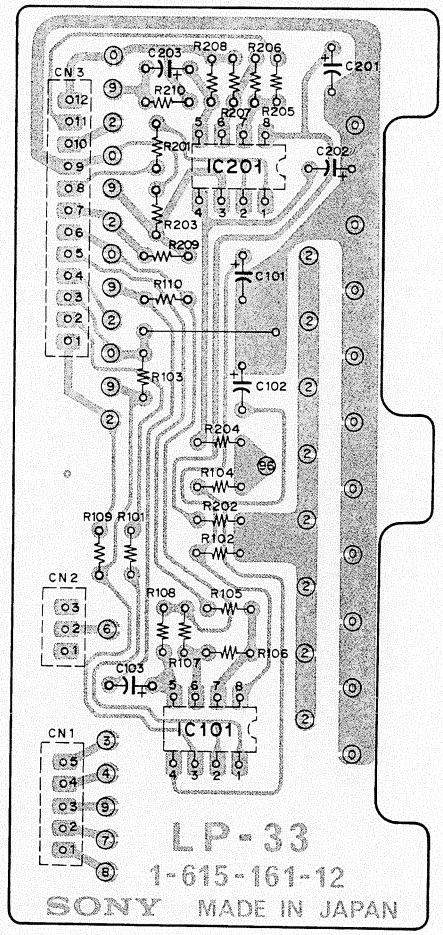

LP-33
– SOLDERING SIDE –
1-615-161-12
BVU-850P

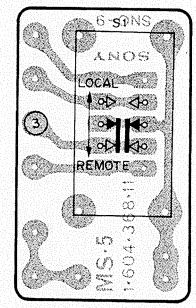

MS-5(E)
– SOLDERING SIDE –
1-604-368-11
BVU-850P

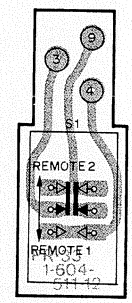

PR-33
– SOLDERING SIDE –
1-604-511-12
BVU-850P

CC-9; CASSETTE COMPARTMENT
CC-10; CASSETTE IN DETECTOR
CC-11; CASSETTE DOWN DETECTOR

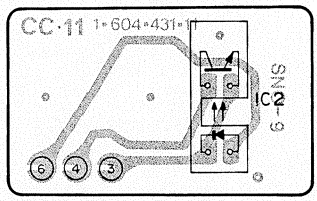

CC-11 – SOLDERING SIDE –
1-604-431-12
BVU-850P

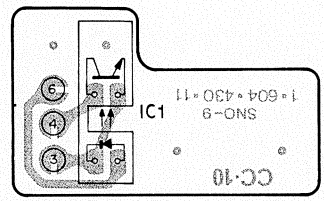

CC-10 – SOLDERING SIDE –
1-604-430-12
BVU-850P

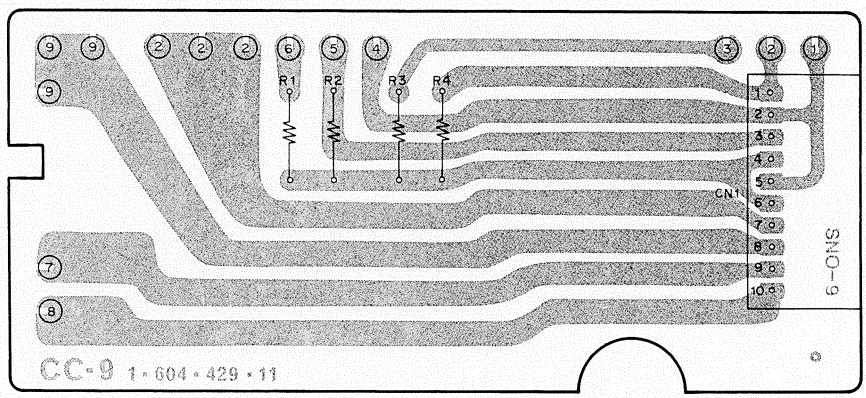

CC-9 – SOLDERING SIDE –
1-604-429-12
BVU-850P

RM-4; REMOTE CONNECTOR

S/N; UP TO 10390

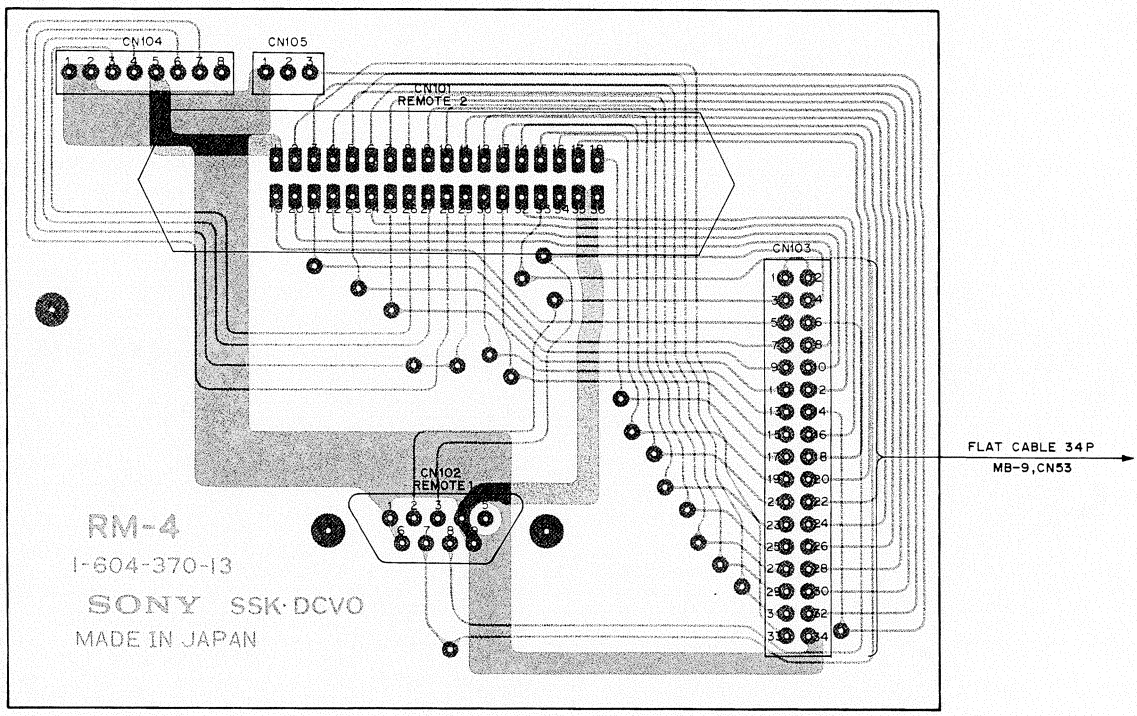

RM-4 –SOLDERING SIDE–
1-604-370-13
BVU-850P

RM-35; REMOTE CONNECTOR DC FAN

S/N; 10391 and higher

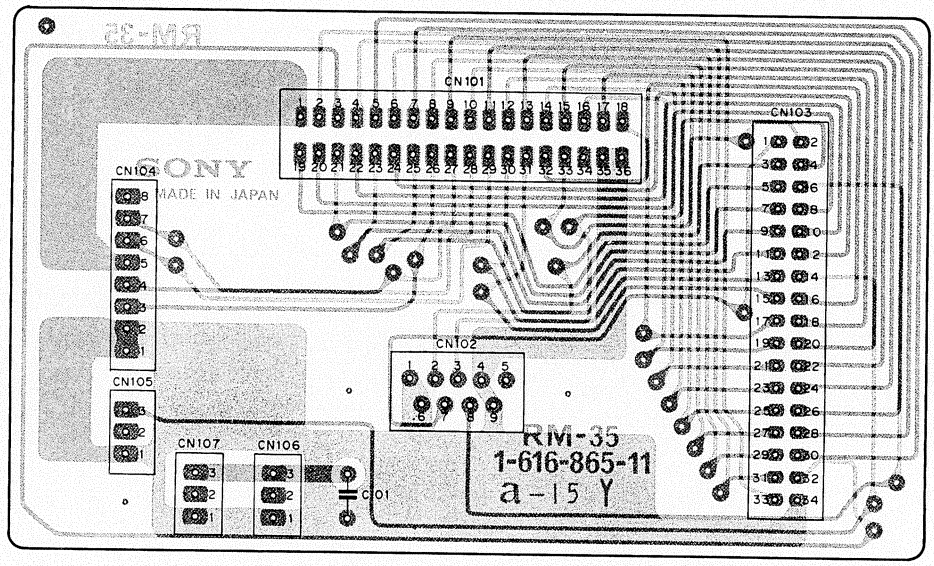

RM-35 – SOLDERING SIDE –
1-616-865-11
BVP-850
BVP-850P

TM-14; TERMINAL

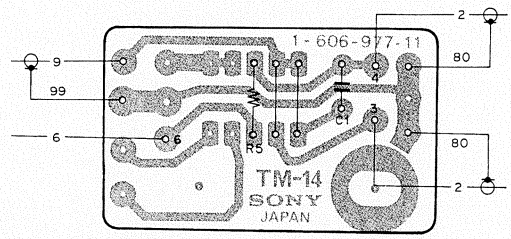

TM-14 -SOLDERING SIDE-
1-606-977-11
BVU-850P

RE-3; T/S-REEL MOTOR
PC-12; TAPE BEGIN/END DETECTOR
PC-8; TAPE BEGIN/END DETECTOR

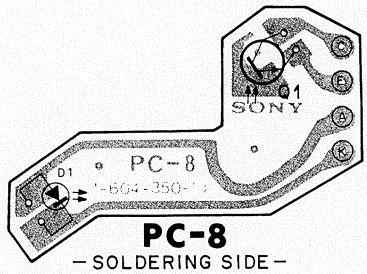

PC-8
— SOLDERING SIDE —
1-604-350-13
BVU-850P

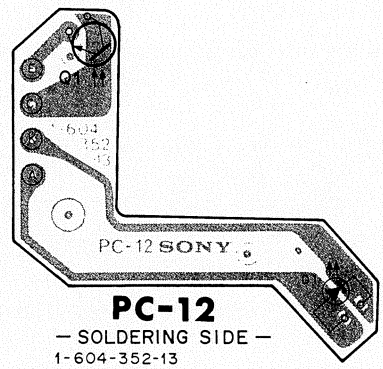

PC-12
— SOLDERING SIDE —
1-604-352-13
BVU-850P

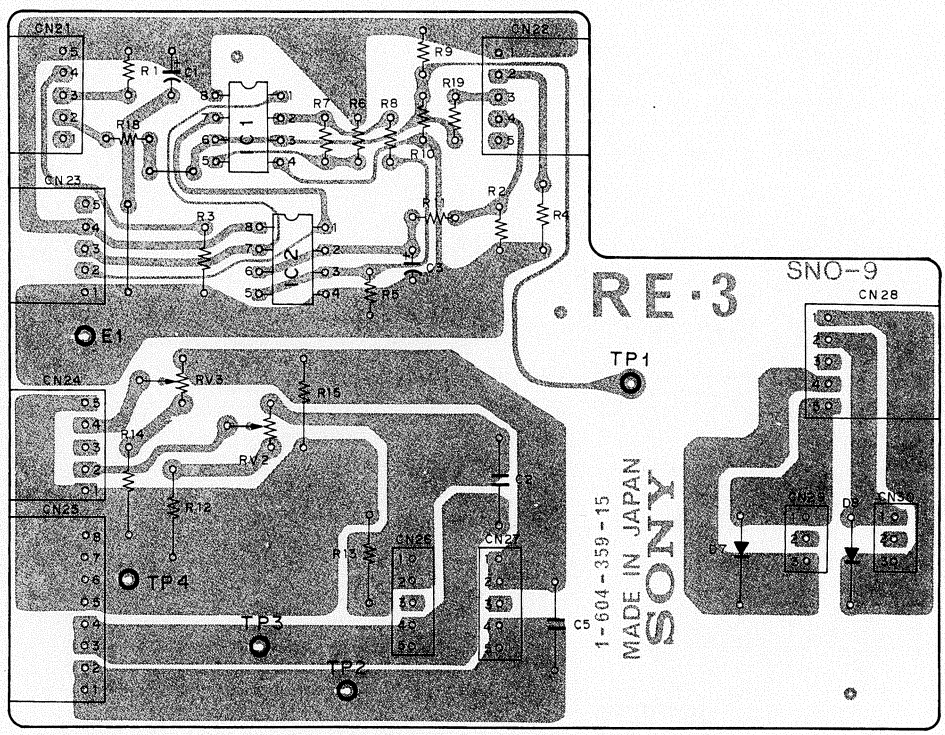

RE-3 — SOLDERING SIDE —
1-604-359-15
BVU-850P

MB-9, EK-3, EK-2(A), PC-7(B)

MB-9; MOTHER BOARD
EK-3; THREAD END DETECTOR
EK-2(A); UNTHREAD END DETECTOR
PC-7(B); MISS REC DETECTOR

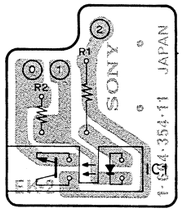

EK-2(A)
–SOLDERING SIDE–
1-604-354-12
BVU-850P

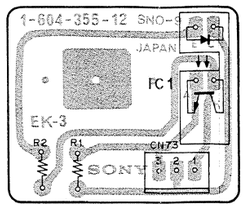

EK-3–SOLDERING SIDE–
1-604-355-12
BVU-850P

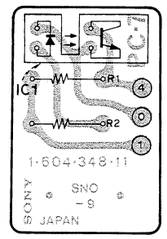

PC-7(B)
–SOLDERING SIDE–
1-604-348-11
BVU-850P

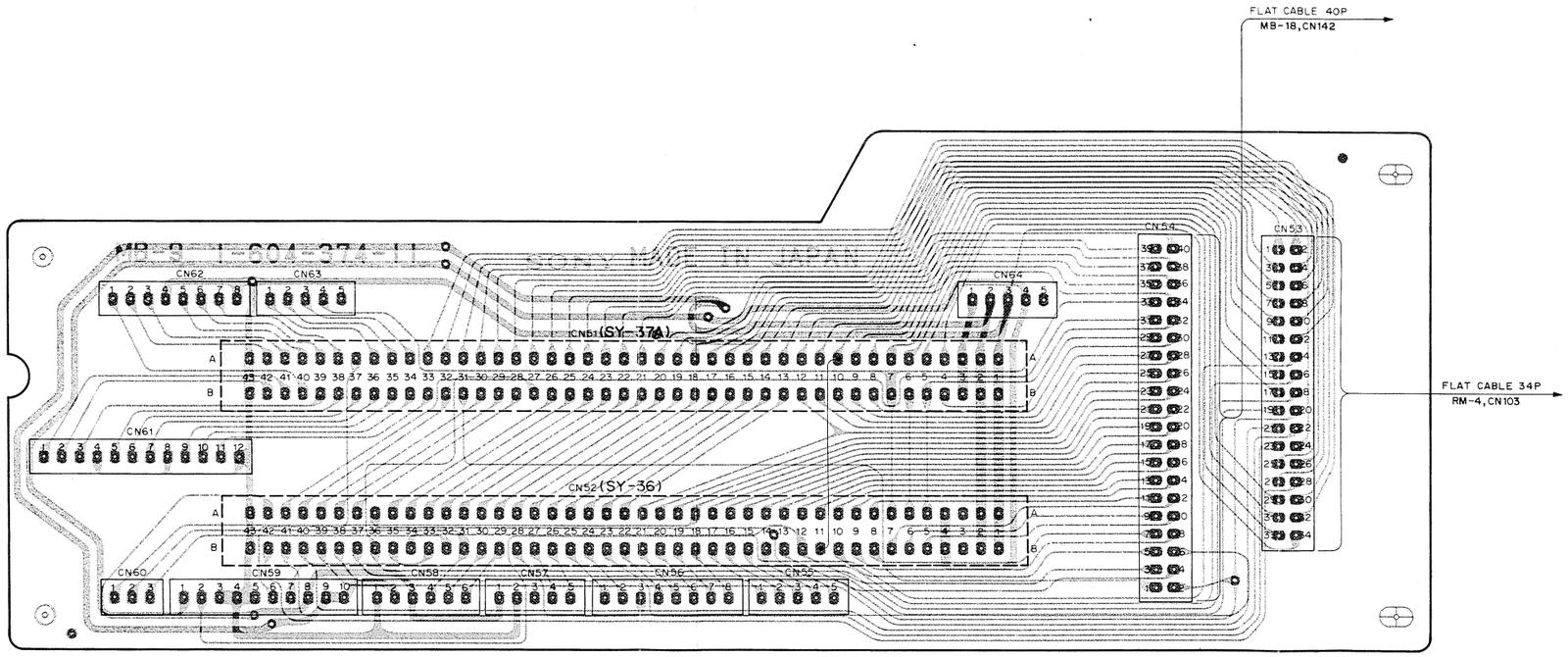

MB-9 –SOLDERING SIDE–
1-604-374-11
BVU-850P

MB-18-1; MOTHER BOARD
PC-7(A); KCA/KCS DETECTOR
PH-1(A); LE-4(A); S-REEL TENSION DETECTOR
PH-1(B); LE-4(B); T-REEL TENSION DETECTOR
EM-1; S/T-REEL DME
TM-4; TC-12; CTL R/P, TC R/P HEAD
MS-5(A); AUDIO LIMITER SW
MS-5(B); MIXING SELECT
MS-5(C); MODE SELECT
MS-5(D); DUB/LINE SELECT
LV-1; VIDEO LEVER VR

CN111	M-5
CN112	M-4
CN113	M-3
CN114	M-2
CN115	D-5
CN116	D-3
CN117	D-2
CN118	P-4
CN119	O-4
CN120	N-4
CN121	L-4
CN122	K-4
CN123	O-3
CN124	P-2
CN125	P-1
CN126	P-1
CN127	N-1
CN128	M-1
CN129	G-5
CN130	E-5
CN131	D-5
CN132	F-4
CN133	E-4
CN134	C-4
CN135	B-4
CN136	H-3
CN137	B-3
CN138	H-3
CN139	F-3
CN140	B-3
CN141	F-2
CN142	H-2
CN143	E-1
CN144	D-1
CN145	A-3
CN146	A-2
CN147	A-1
CN148	K-3
CN149	Q-1
CN150	D-1
CN151	N-3
CN161	K-1
CN162	O-3
CN163	L-1
CN164	B-1
TP1	E-4
TP2	D-4

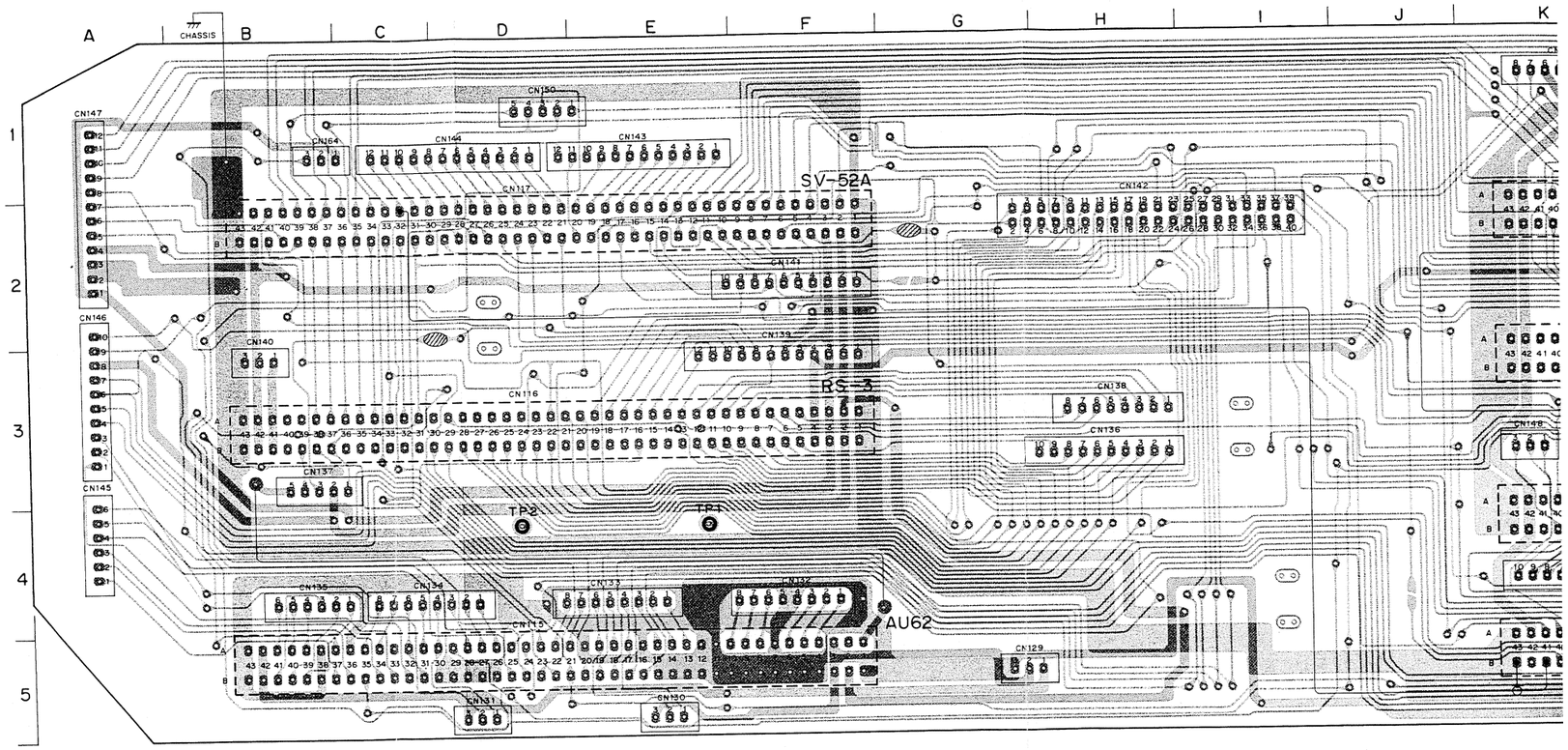

MB-18-1, PC-7, PH-1, LE-4, EM-1, TM-4, TC-12, MS-5, LV-1

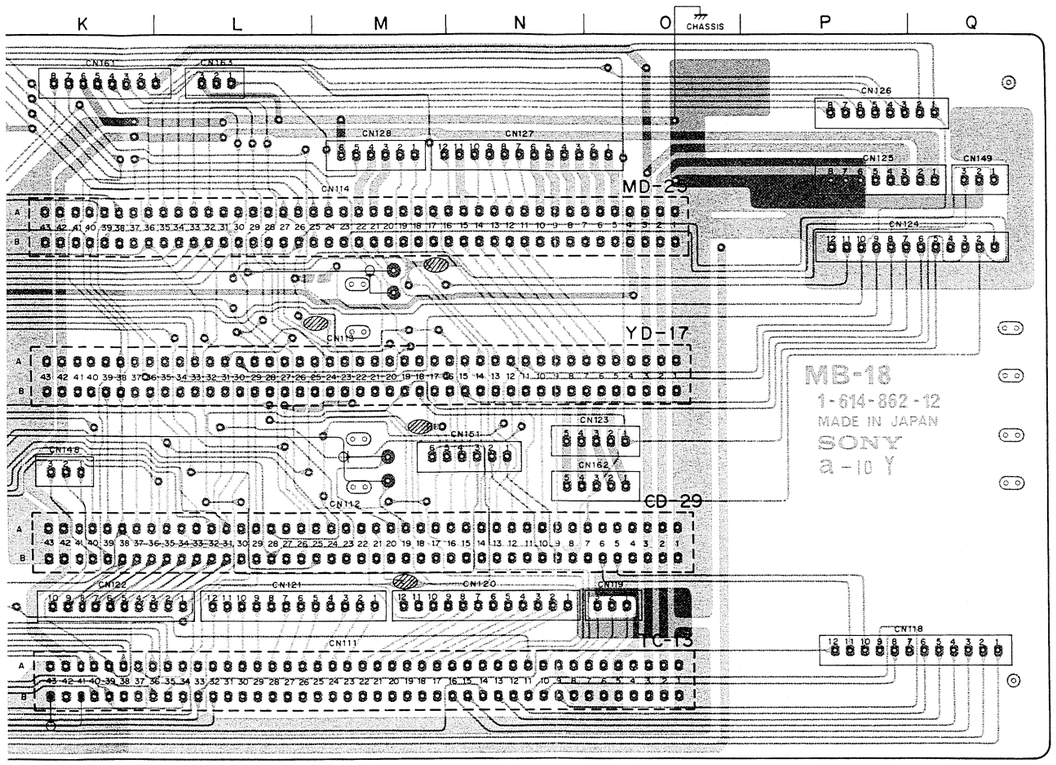

MB-18-1 – SOLDERING SIDE –
1-614-862-12
BVU-850P

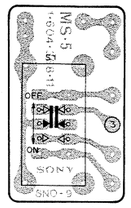

MS-5(A)
– SOLDERING SIDE –
1-604-368-11
BVU-850P

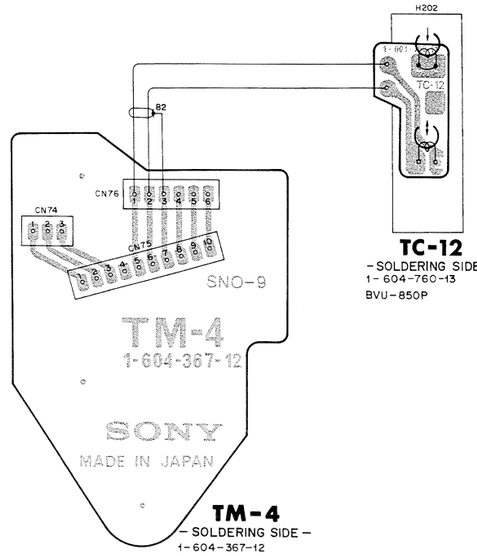

TC-12
– SOLDERING SIDE –
1-604-760-13
BVU-850P

TM-4
– SOLDERING SIDE –
1-604-367-12
BVU-850P

MS-5(C)	MS-5(B)
EDIT ↑ NORMAL ↓ TBC	TO CH-2 ↑ OFF ↓ TO CH-1

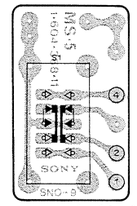

MS-5(B)(C)
– SOLDERING SIDE –
1-604-368-11
BVU-850P

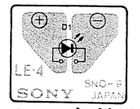

LE-4(A)(B)
– SOLDERING SIDE –
1-604-357-11
BVU-850P

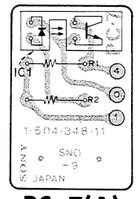

PC-7(A)
– SOLDERING SIDE –
1-604-348-11
BVU-850P

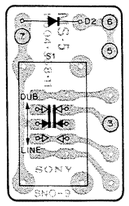

MS-5(D)
– SOLDERING SIDE –
1-604-368-11
BVU-850P

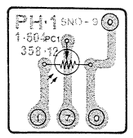

PH-1(A)(B)
– SOLDERING SIDE –
1-604-358-12
BVU-850P

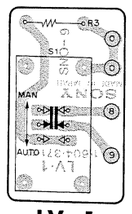

LV-1
– SOLDERING SIDE –
1-604-371-11
BVU-850P

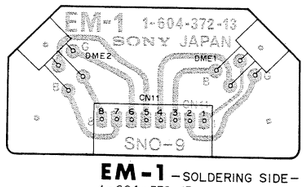

EM-1 – SOLDERING SIDE –
1-604-372-13
BVU-850P

SECTION 19
SPARE PARTS AND FIXTURE

19-1. PARTS INFORMATION

(1) Safety Related Components Warning.
Components identified by shading and marked with ⚠ on the schematic diagrams, exploded views and electrical spare parts list are critical to safe operation.
Replace these components with the Sony parts whose part numbers appear in this manual or in service bulletins and service manual supplements published by Sony.

(2) Replacement Parts supplied from the Sony Parts Center will sometimes have a different shape from the original parts. This is due to "accommodating the improved parts and/or engineering changes" or "standardization of genuine parts".
This manual's exploded views and electrical spare parts list indicate the part numbers of "the standardized genuine parts at the present". Regarding engineering part changes in out engineering department, refer to Sony service bulletins and service manual supplements.

(3) The parts marked with "s" in the SP column of the exploded views and electrical spare parts list are normally stocked for replacement purposes. The parts marked with "o" in the SP column are not normally required for routine service work. Orders for parts marked with "o" will be processed, but allow for additional delivery time.

(4) Item with no part number and/or no description are not stocked because they are seldom required for routine service.

(5) (T) after a spring description is shown on the exploded views in order to indicate the number of a spring turn required for the use.
(Example)
Spring, tension (24T); This spring must be cut at its 24th turn for actual use.

19-2. EXPLODED VIEW

. Exploded views are composed of the following blocks.

(1) Reel Chassis (1)
S/T reel table
S/T main brake
KCA/KCS detector
6th guide

(2) Supply Tension Detector Block
supply tension detector
supply tension regulator arm
tape end detector

(3) Take-up Tension Detector Block
take-up tension detector
unthread end detector
tape beginning detector

(4) Threading Block
threading ring
threading slider
thread end 2 detector
ring drive gear

(5) Threading Arm Block
threading arm
threading motor
thread end 1 detector
V guide

(6) Pinch Lever block
pinch solenoid
Pinch lever

(7) Reel Chassis (bottom view)
S tension solenoid
S/T brake solenoid
reel motor

(8) Drum Block
head drum
slip-ring
time code/erase head
audio/CTL head
capstan motor

(9) Cassette-up Compartment Block

(10) Control Panel Block
control panel
skew corrector
(11) Function Control Panel Block
function control panel
key switch
search dial
hinge (R)
hinge (L)
(12) Power Chassis Block
(13) Connector Panel Block (1)
(14) Connector Panel Block (2)
remote connector
(15) Chassis Block
printed circuit board
(16) Ornamental Panel Block (1)
(17) Ornamental Panel Block (2)
function control panel
control panel
(18) Printed Circuit Board
shield case
(19) Supplied Accessory

	HEXAGON SOCKET SCREW 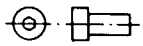	HEXAGON SET SCREW 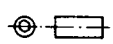	(–) SET SCREW FLAT POINT 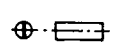	(–) SET SCREW CONE POINT 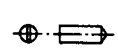
2.6 x 3	———	7-621-734-09	———	———
2.6 x 4	7-621-996-24	7-621-735-09	———	———
2.6 x 5	———	7-621-736-09	———	———
2.6 x 6	7-683-412-05	———	———	7-621-712-55
2.6 x 8	7-683-413-05	———	———	7-621-712-65
2.6 x 10	———	———	———	7-621-712-75
3 x 4	———	7-683-238-01	———	———
3 x 5	———	———	7-683-175-01	———
3 x 6	7-683-403-04	———	7-683-176-01	7-683-176-21
3 x 8	7-683-404-04	———	———	7-683-177-21
3 x 10	7-683-405-04	———	———	7-683-178-21
3 x 12	———	———	———	7-683-179-21

	PS	PSW	B (BZn-N)	B (Cr-N)	PTT	PTTWH
2.6 x 4	7-621-972-05	———	7-621-912-10	7-621-912-18	———	7-687-508-31
2.6 x 6	7-621-972-25	7-621-981-15	7-621-912-30	7-621-912-38	———	7-687-501-31
2.6 x 8	7-621-972-35	7-621-981-25	7-621-912-40	7-621-912-48	———	7-687-502-31
2.6 x 10	7-621-972-45	7-621-981-35	7-621-912-50	7-621-912-58	———	7-687-503-31
2.6 x 12	7-621-972-55	7-621-981-45	7-621-912-60	7-621-912-68	———	7-687-504-31
2.6 x 14	7-621-972-65	7-621-981-55	7-621-912-70	7-621-912-78	———	7-687-505-31
2.6 x 16	7-621-972-75	7-621-981-65	7-621-912-80	7-621-912-88	———	7-687-506-31
2.6 x 20	7-621-972-85	7-621-981-75	7-621-912-90	7-621-912-98	———	7-687-507-31
3 x 5	7-686-446-01	———	———	———	———	———
3 x 6	7-686-447-01	7-686-527-01	7-686-624-09	7-686-624-04	7-687-411-31	7-687-510-31
3 x 8	7-686-448-01	7-686-528-01	7-686-625-09	7-686-625-04	7-687-412-31	7-687-511-31
3 x 10	7-686-449-01	7-686-529-01	7-686-626-09	7-686-626-04	7-687-413-31	7-687-512-31
3 x 12	7-686-450-01	7-686-530-01	7-686-627-09	7-686-627-04	7-687-414-31	7-687-513-31
3 x 16	7-686-452-01	7-686-532-01	7-686-629-09	7-686-629-04	———	———
3 x 20	7-686-453-01	7-686-533-01	7-686-630-09	7-686-630-04	———	———
3 x 25	7-686-454-01	7-686-534-01	7-686-631-09	7-686-631-04		
4 x 8	7-686-468-01	7-686-548-01	7-686-635-09	7-686-635-04	———	———
4 x 12	7-686-470-01	7-686-550-01	7-686-637-09	7-686-637-04	———	———
4 x 14	7-686-471-01	———	7-686-638-09	7-686-638-04	———	———
4 x 16	7-686-472-01	———	7-686-639-09	7-686-639-04	———	———
4 x 20	7-686-473-01	———	7-686-640-09	7-686-640-04	———	———

	FLAT WASHER SMALL W.	FLAT WASHER MIDDLE W.	SPRING WASHER SW.	TOOTHED WASHER TYPE B LW.	HEXAGON NUT N.
2.6 mm	7-688-002-01	7-688-002-12	7-623-207-22	7-623-421-07	7-622-207-05
3 mm	7-688-003-01	7-688-003-12	7-688-003-11	7-623-422-07	7-684-023-04
4 mm	7-688-004-01	7-688-004-12	7-623-210-22	7-623-423-07	7-684-024-04
5 mm	7-688-005-01	7-688-005-01	7-623-212-22	———	7-684-025-04

	STOP RING E TYPE E.
2	7-624-104-04
2.3	7-624-105-04
3	7-624-106-04
4	7-624-108-04
5	7-624-109-04
6	7-624-110-04

Reel Chassis (1)

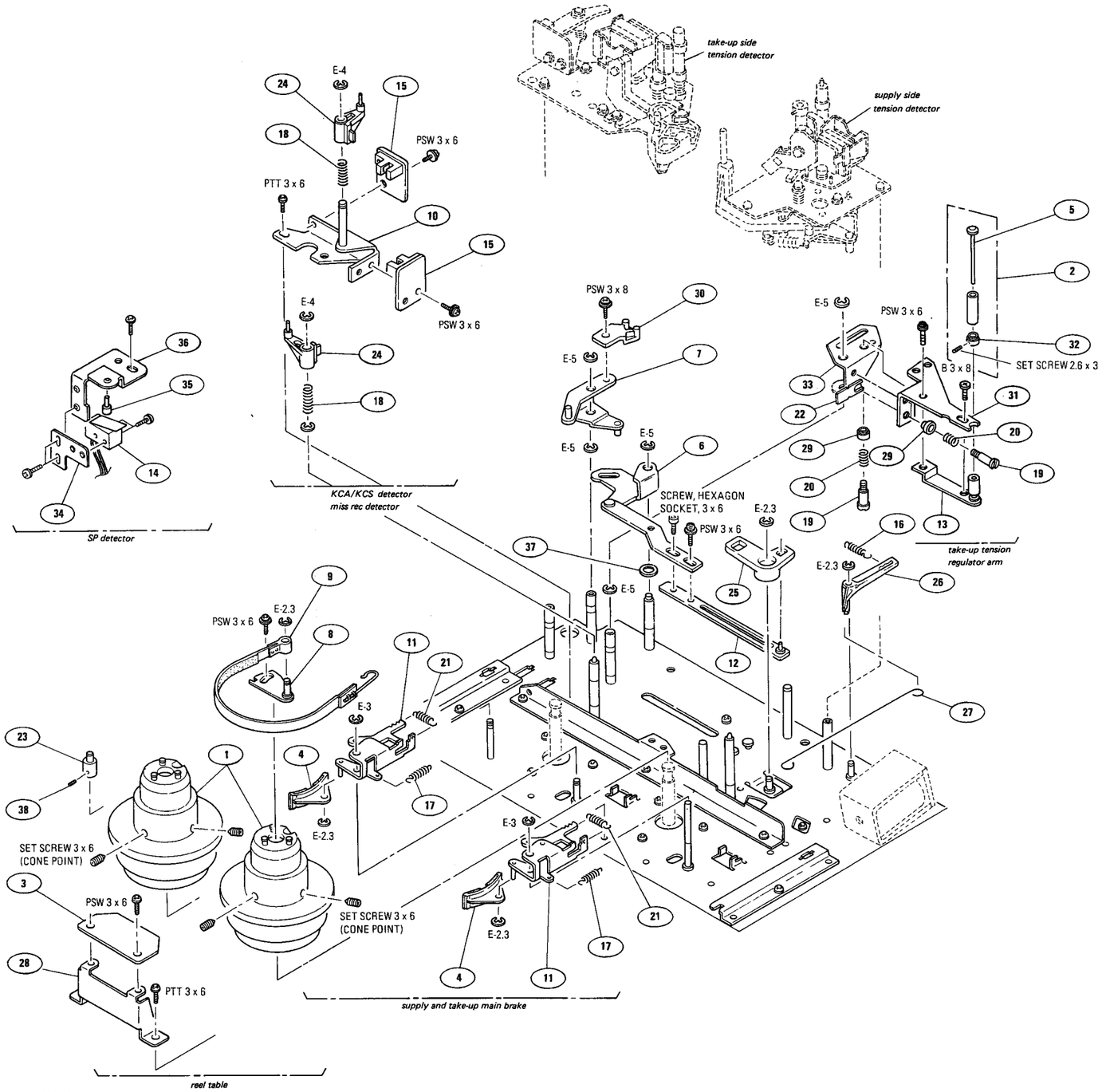

BVU-850P (1)

No.	Parts No.	SP	Description
1	A-6739-015-B	s	TABLE ASSY, REEL
2	A-6746-017-A	s	ROLLER ASSY, 6G GUIDE
3	A-6748-123-B	o	EM-1 ASSY
4	X-3642-166-0	s	SHOE ASSY
5	X-3668-001-0	o	GUIDE ASSY, 6G
6	X-3668-021-0	o	PLATE ASSY, ST
7	X-3668-025-0	o	ARM ASSY, DRAWER, 6T
8	X-3668-044-0	o	BRACKET SUB ASSY, TB
9	X-3668-045-0	s	BAND ASSY, BRAKE
10	X-3668-046-0	o	BRACKET SUB ASSY, S.D
11	X-3668-047-0	o	LEVER SUB ASSY, BRAKE
12	X-3668-050-0	o	PLATE ASSY, DRAWING
13	X-3668-084-0	o	PLATE ASSY, ADJUSTMNET, 6G
14	1-570-028-11	s	SWITCH, MICRO
15	1-604-348-00	o	PRINTED CIRCUIT BOARD, PC-7
16	3-446-195-00	s	SPRING, TENSION
17	3-535-558-00	s	SPRING, TENSION
18	3-543-967-00	s	SPRING, COMPRESSION
19	3-641-621-00	o	SCREW, HEAD ADJUSTING
20	3-641-622-00	s	SPRING, COMPRESSION
21	3-642-752-00	o	SPRING, TENSION
22	3-651-334-21	s	SPACER, REEL MOTOR (0.1T)
23	3-668-031-00	o	RETAINER (UPPER), CASSETTE
24	3-668-032-00	s	ACTUATOR, S.D
25	3-668-033-00	o	ARM, DRAWER
26	3-668-034-00	s	LEVER (1), S CHANGE
27	3-668-036-00	o	ROD, PULL, S
28	3-668-037-02	o	BRACKET, R-DME
29	3-668-103-00	o	ROLLER, CAM
30	3-668-215-00	o	ARM (1), DRAWER, 6G
31	3-668-223-02	o	BASE, GUIDE, 6G
32	3-668-224-00	o	GUIDE (3) LOWER,6G
33	3-668-229-00	o	GUIDE (2), NO. 6
34	3-688-821-01	o	BRACKET (C), SW
35	3-688-845-01	o	SHAFT, SP
36	3-688-823-01	o	BRACKET (C)
37	3-701-444-21	s	WASHER, POLY 6MM DIA., 0.5T
38	3-701-506-01	s	SET SCREW, DOUBLE POINT 3x4

Supply Tension Detector Block

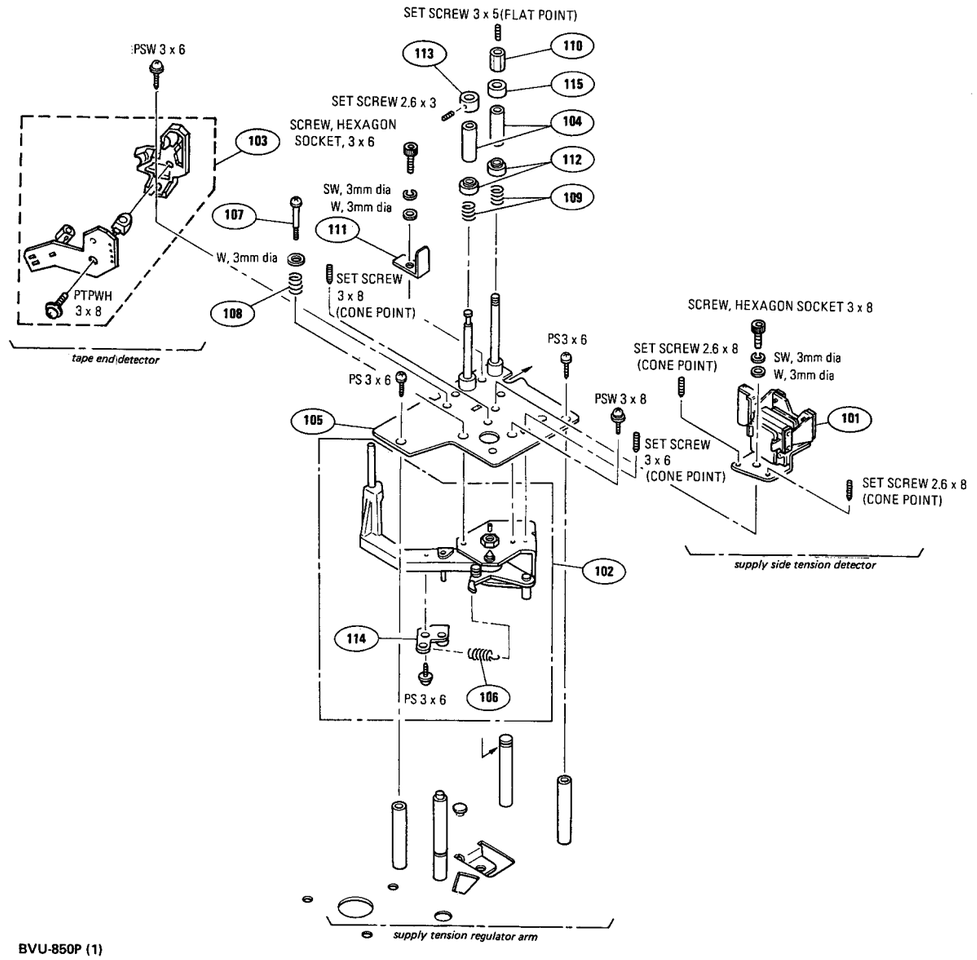

BVU-850P (1)

No.	Parts No.	SP	Description
101	A-6742-036-B	s	DETECTOR (S) ASSY
102	A-6742-038-B	o	ARM ASSY, TENSION REGULATOR
103	A-6742-046-A	o	MOUNTED CIRCUIT BOARD, PC-8
104	X-3668-005-0	s	ROLLER ASSY (1), GUIDE
105	X-3668-040-0	o	BASE SUB ASSY, S-TD
106	3-140-194-XX	s	SPRING, TENSION (27T)
107	3-418-191-00	s	SCREW
108	3-428-132-00	s	SPRING, COMPRESSION
109	3-537-213-00	s	SPRING, COMPRESSION
110	3-641-616-00	s	NUT, TAPE GUIDE ADJUSTMENT
111	3-668-072-00	o	STOPPER, T.D
112	3-668-073-00	s	FLANGE (1), G ROLLER
113	3-668-074-00	s	FLANGE (2), G ROLLER
114	3-668-094-00	o	BRACKET, T.S
115	3-668-471-00	s	FLANGE (3), G ROLLER

Take-up Tension Detector Block

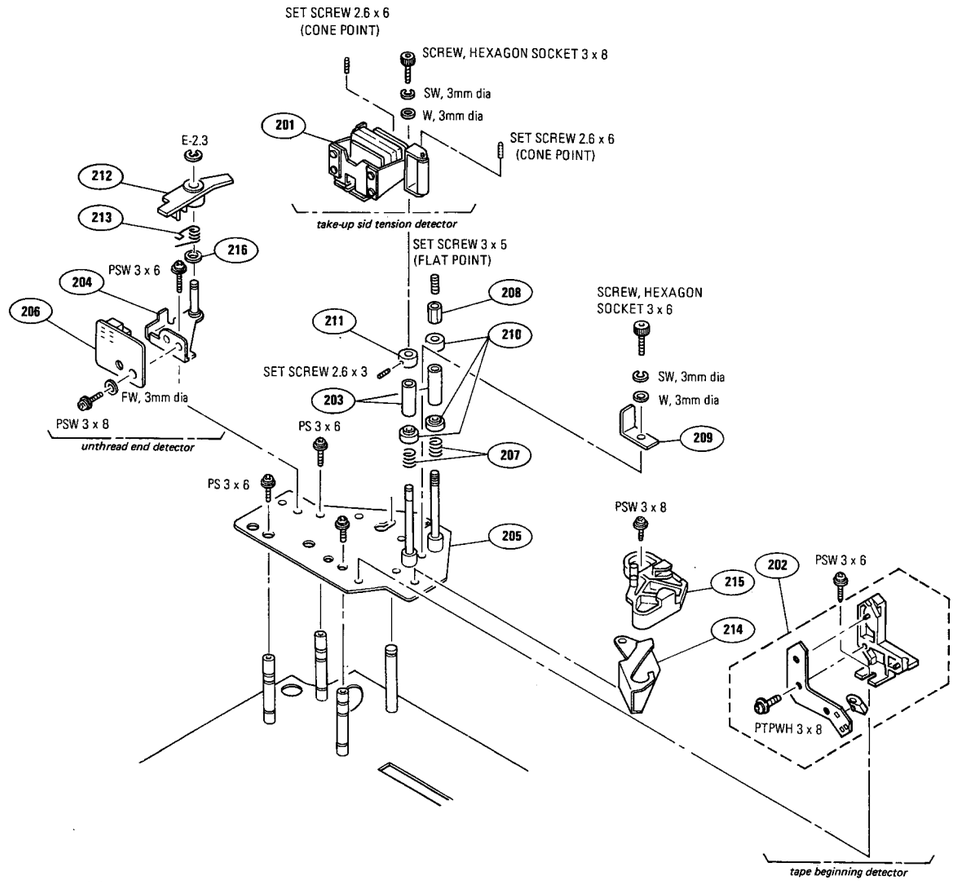

BVU-850P (1)

No.	Parts No.	SP	Description
201	A-6742-034-A	s	DETECTOR (T) ASSY
202	A-6742-047-A	o	MOUNTED CIRCUIT BOARD, PC-12
203	X-3668-005-0	s	ROLLER ASSY (1), GUIDE
204	X-3668-022-0	o	BASE ASSY, END, UT
205	X-3668-032-0	o	BASE SUB ASSY, T-TD
206	1-604-354-00	o	PRINTED CIRCUIT BOARD, EK-2
207	3-537-213-00	s	SPRING, COMPRESSION
208	3-641-616-00	s	NUT, TAPE GUIDE ADJUSTMENT
209	3-668-072-00	o	STOPPER, T.D
210	3-668-073-00	s	FLANGE (1), G ROLLER
211	3-668-074-00	s	FLANGE (2), G ROLLER
212	3-668-219-00	o	SENSOR, END, UT
213	3-668-220-00	o	SPRING
214	3-668-252-00	o	HOLDER, 5G
215	3-668-442-00	o	HOLDER (2), 5G
216	3-701-439-11	s	WASHER, POLY 3MM DIA., 0.25T

Threading Block

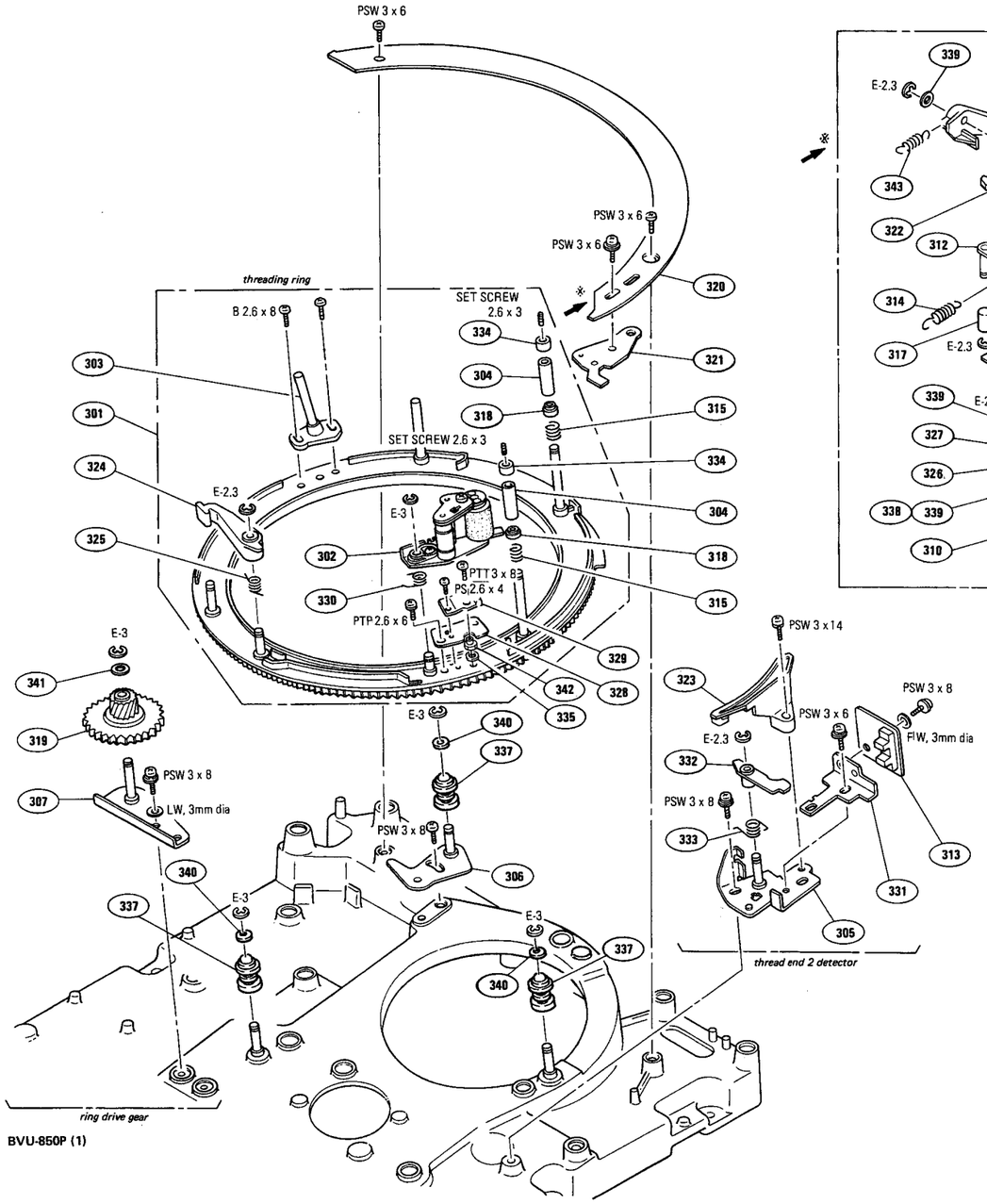

BVU-850P (1)

No.	Parts No.	SP	Description
301	A-6750-112-G	s	RING ASSY, THREADING
302	A-6750-113-F	s	ARM ASSY, PINCH
303	X-3668-004-0	s	SPACER ASSY, GUIDE, CORRECTION
304	X-3668-005-0	s	ROLLER ASSY (1), GUIDE
305	X-3668-009-0	o	CHASSIS ASSY, END
306	X-3668-010-0	o	PLATE SUB ASSY, ADJUSTMENT
307	X-3668-023-0	o	BASE ASSY, GEAR, RING
308	X-3668-052-3	s	ARM ASSY, T.H.
309	X-3668-053-0	o	BASE ASSY, M
310	X-3668-054-0	o	TABLE ASSY, ROLLER
311	X-3668-104-0	o	SUPPORT ASSY, ARM
312	X-3668-105-0	o	HOLDER (LOWER) ASSY, M
313	1-604-354-00	o	PRINTED CIRCUIT BOARD, EK-2
314	3-140-194-XX	s	SPRING, TENSION (27T)
315	3-483-015-00	o	SPRING, COMPRESSION
316	3-549-810-00	s	SPRING, TENSION
317	3-642-410-00	o	ROLLER
318	3-668-073-00	s	FLANGE (1), G ROLLER
319	3-668-210-00	o	GEAR (2), DRIVE, RING
320	3-668-234-02	o	RAIL (2)
321	3-668-235-00	o	STOPPER, M
322	3-668-245-03	o	PLATE (2), M-T.H
323	3-668-246-00	o	CAM, M RELEASE
324	3-668-247-00	o	LEVER (3), REW
325	3-668-248-02	o	SPRING, TORSION
326	3-668-250-00	s	ROLLER (1), M
327	3-668-251-00	s	ROLLER (2), M
328	3-668-256-03	o	PLATE, BASE
329	3-668-257-03	o	SPRING, LEAF
330	3-668-261-00	o	SPRING, TORSION
331	3-668-282-00	o	BRACKET, PC
332	3-668-283-00	o	SENSOR, END
333	3-668-284-00	o	SPRING
334	3-668-437-03	s	FLANGE (UPPER), ROLLER
335	3-672-910-00	s	WASHER, RUBBER
336	3-672-963-00	o	HOLDER (UPPER), M
337	3-672-977-00	s	ROLLER, RING
338	3-701-439-11	s	WASHER, POLY 3MM DIA., 0.25T
339	3-701-439-21	s	WASHER, POLY 3MM DIA., 0.5T
340	3-701-441-01	s	WASHER, POLY 4MM DIA., 0.13T
341	3-701-441-21	s	WASHER, POLY 4MM DIA., 0.5T
342	4-334-513-00	s	NUT, NYLON
343	4-858-754-00	s	SPRING, TENSION

Threading Arm Block

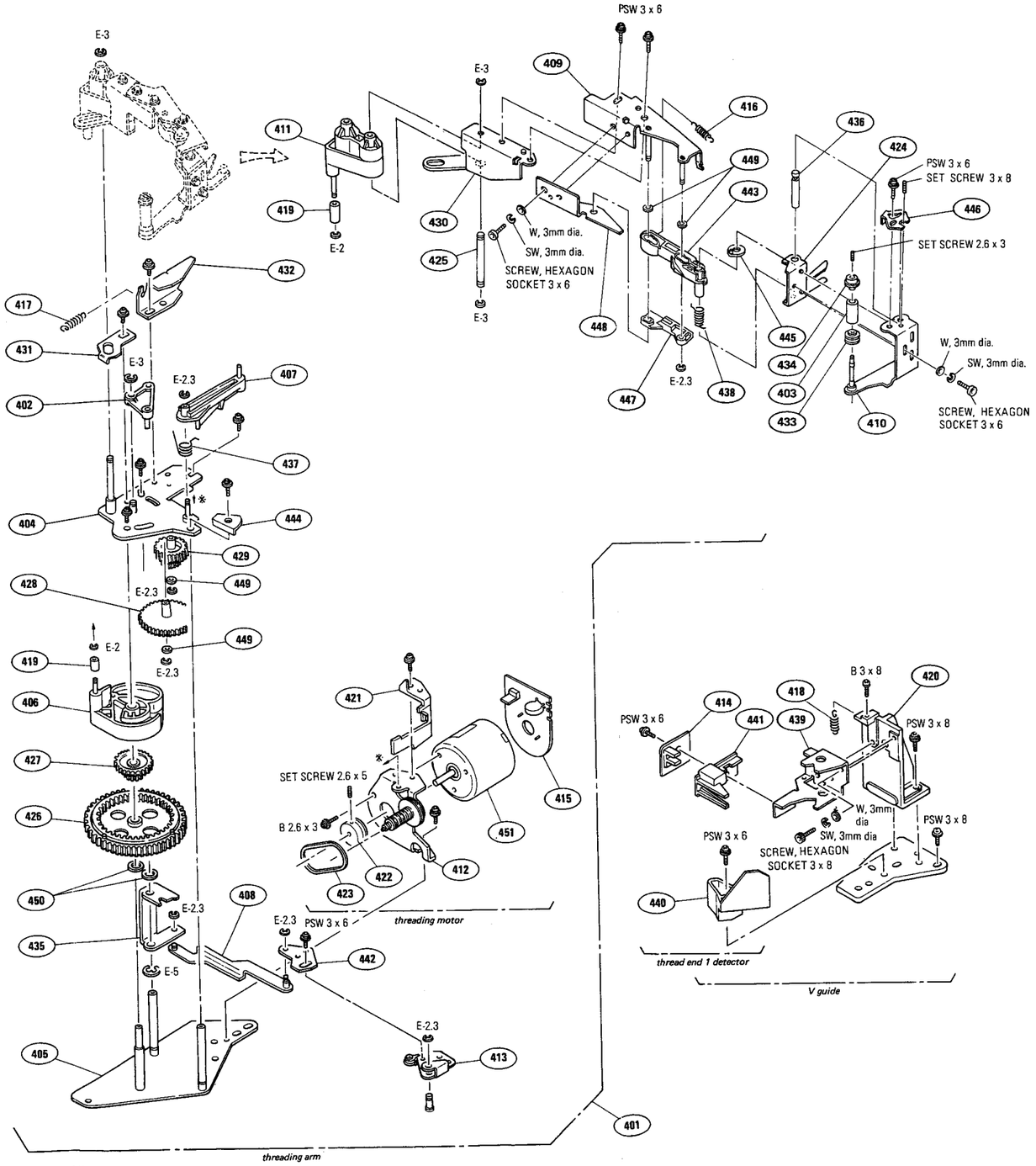

BVU-850P (1)

No.	Parts No.	SP	Description
401	A-6750-119-A	o	THREADING ASSY, T
402	X-3668-002-0	o	LEVER ASSY, R.C.
403	X-3668-006-0	s	ROLLER ASSY (2), GUIDE
404	X-3668-011-0	o	BASE (UPPER) ASSY, BLOCK, GEAR
405	X-3668-012-0	o	BASE (LOWER) ASSY, BLOCK, GEAR
406	X-3668-013-0	s	CAM ASSY, M
407	X-3668-014-0	o	ARM ASSY, ROTARY
408	X-3668-015-0	o	LEVER ASSY, RG
409	X-3668-016-3	o	ARM ASSY, THREADING
410	X-3668-017-3	o	ARM (1) ASSY, T.
411	X-3668-019-0	o	HOLDER ASSY, T.H.
412	X-3668-020-0	s	BRACKET ASSY, MOTOR
413	X-3668-099-0	s	SENSOR ASSY (2), RING
414	1-604-355-00	o	PRINTED CIRCUIT BOARD, EK-3
415	1-604-364-00	o	PRINTED CIRCUIT BOARD, TM-8
416	3-486-135-XX	s	SPRING, TENSION (13T)
417	3-540-226-00	s	SPRING, TENSION
418	3-630-419-XX	o	SPRING, TENSION (16T)
419	3-642-410-00	o	ROLLER
420	3-642-474-00	s	BRACKET, ARM
421	3-668-171-02	o	COVER, WORM
422	3-668-172-00	s	PULLEY (3), LM
423	3-668-173-00	s	BELT (3), LM
424	3-668-181-00	o	ARM (2), T.
425	3-668-184-00	o	SHAFT, ARM, S
426	3-668-185-00	o	GEAR, RING
427	3-668-186-00	o	GEAR
428	3-668-187-00	o	GEAR, MIDWAY
429	3-668-188-00	o	WHEEL
430	3-668-190-03	o	ARM (1), THREADING
431	3-668-191-00	o	STOPPER, END, T.
432	3-668-192-04	o	CAM, UNTHREAD
433	3-668-193-03	s	FLANGE (LOWER), GUIDE
434	3-668-194-00	s	FLANGE (UPPER), GUIDE
435	3-668-195-00	o	STOPPER, U.T
436	3-668-197-02	o	PIN, CENTER
437	3-668-198-00	o	SPRING
438	3-668-199-03	o	SPRING
439	3-668-212-00	o	GUIDE, V
440	3-668-213-03	o	CAM, T.H.D.
441	3-668-214-03	o	COVER, P.H.C
442	3-668-222-00	o	SENSOR (2), RING
443	3-668-329-03	o	ARM, LIMITER
444	3-668-489-00	o	STOPPER, TH
445	3-672-950-00	o	CAM, HA
446	3-672-951-00	o	STOPPER (A)
447	3-672-952-00	o	RETAINER (1), RA
448	3-672-953-00	o	RETAINER (2), RA
449	3-701-439-21	s	WASHER, POLY 3MM DIA., 0.5T
450	3-701-444-11	s	WASHET, POLY 6MM DIA., 0.25T
451	8-835-056-01	s	MOTOR, DC (DNR-1002A)

Pinch Lever Block

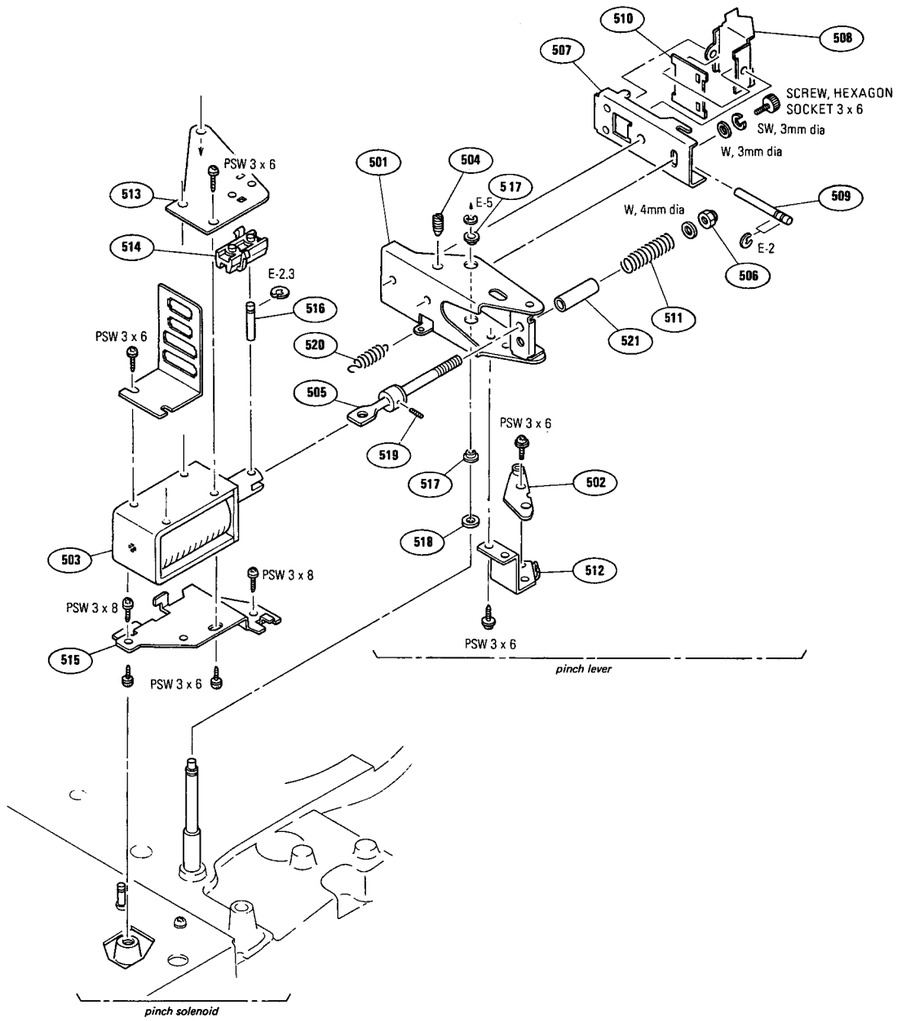

BVU-850P (1)

Reel Chassis (bottom view)

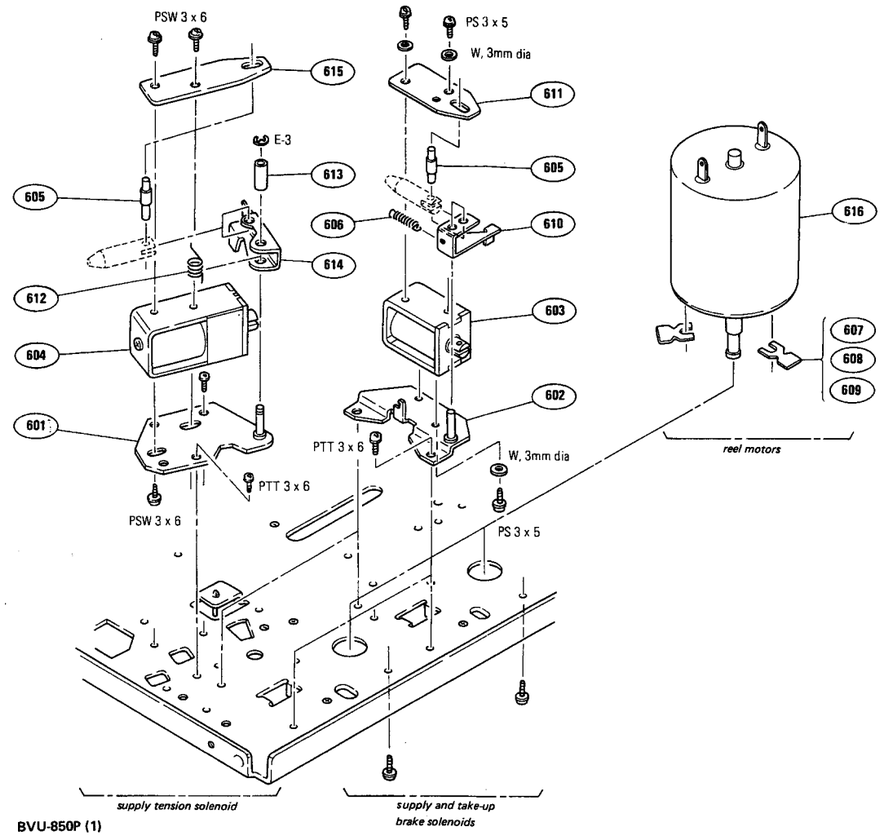

BVU-850P (1)

No.	Parts No.	SP	Description
501	X-3668-007-0	o	PINCH LEVER SUB ASSY
502	X-3668-008-0	o	PLATE ASSY, ROLLER, CAM
503	1-454-276-00	s	SOLENOID
504	3-642-805-00	o	SCREW, ADJUSTING
505	3-648-054-00	o	ROD, PLUNGER JOINT
506	3-648-057-00	o	NUT (ISO-4), U
507	3-668-273-00	o	PINCH LEVER (B)
508	3-668-274-00	o	PINCH LEVER (C)
509	3-668-276-00	o	SHAFT
510	3-668-277-00	o	SPRING

No.	Parts No.	SP	Description
511	3-668-278-00	o	SPRING, COMPRESSION
512	3-668-279-00	o	BASE, CAM ROLLER
513	3-668-289-00	o	REINFORCEMENT
514	3-668-290-00	o	GUIDE, SHAFT
515	3-668-291-00	o	BRACKET, SOLENOID
516	3-668-292-00	o	SHAFT, SOLENOID
517	3-668-294-00	o	SPACER, PINCH
518	3-701-444-11	s	WASHER, POLY 6MM DIA., 0.25T
519	3-701-508-00	s	SET SCREW, DOUBLE POINT 3x6
520	3-701-788-XX	s	SPRING, TENSION (48T)
521	9-910-999-33	s	SPACER (4x25)

No.	Parts No.	SP	Description
601	X-3668-048-0	o	BRACKET SUB ASSY, KS
602	X-3668-049-0	o	BRACKET SUB ASSY, BP
603	1-454-278-00	s	SOLENOID
604	1-454-279-00	s	SOLENOID
605	3-645-051-03	o	PIN, D-PINCH PLUNGER
606	3-645-392-00	s	SPRING, TENSION
607	3-651-334-01	s	SPACER, REEL MOTOR (0.02T)
608	3-651-334-11	s	SPACER, REEL MOTOR (0.05T)
609	3-651-334-21	s	SPACER, REEL MOTOR (0.1T)
610	3-668-043-00	o	ARM, BP

No.	Parts No.	SP	Description
611	3-668-044-00	o	GUIDE, BP
612	3-668-047-00	o	SPRING
613	3-668-048-01	o	SPACER (4x12)
614	3-668-049-00	o	LEVER, KS
615	3-668-050-00	o	PLATE, GUIDE, KS
616	8-835-050-01	s	MOTOR, DC (MNR-4400A)

Drum Block

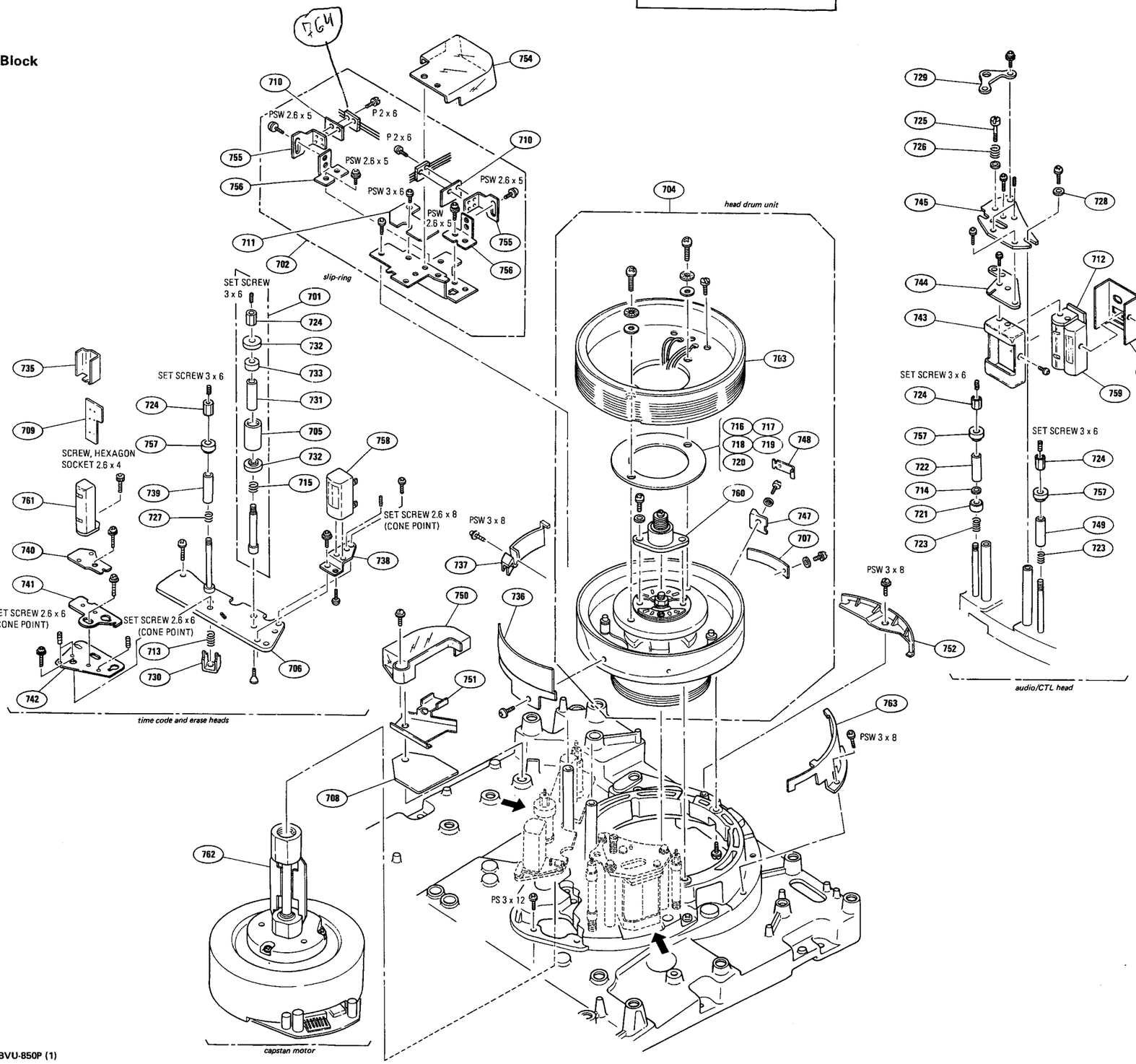

BVU-850P (1)

No.	Parts No.	SP	Description
701	A-6709-349-A	s	ROLLER BLOCK ASSY, GUIDE, D
702	A-6709-479-A	o	BRUSH (5) ASSY
~~703~~ 704	A-6709-498-A	s	HEAD DRUM ASSY, DUH-32A-R
~~704~~ 703	A-6709-500-A	s	UPPER DRUM ASSY, DUR-32-R
705	X-3655-607-0	s	ROLLER ASSY, GUIDE
706	X-3655-613-1	o	BASE ASSY (C), G.H
707	1-586-633-00	s	CONDENSATION, SENSOR
708	1-604-367-00	o	PRINTED CIRCUIT BOARD, TM-4
709	1-604-760-00	o	PRINTED CIRCUIT BOARD, TC-12
710	1-605-756-00	o	PRINTED CIRCUIT BOARD, DV-3
711	1-615-818-11	o	PRINTED CIRCUIT BOARD, SR-29
712	1-615-924-11	o	PRINTED CIRCUIT BOARD, DUS-92
713	3-434-141-00	s	SPRING, COMPRESSION
714	3-534-329-11	s	WASHER, TAPE GUIDE
715	3-537-214-00	s	SPRING, COMPRESSION
716	3-630-029-01	s	SPACER, FLANGE (0.01T)
717	3-630-029-11	s	SPACER, FLANGE (0.02T)
718	3-630-029-21	s	SPACER, FLANGE (0.05T)
719	3-630-029-31	s	SPACER, FLANGE (0.1T)
720	3-630-029-41	s	SPACER, FLANGE (0.03T)
721	3-641-612-00	s	GUIDE, TAPE
722	3-641-613-00	s	GUIDE, TAPE
723	3-641-615-00	s	SPRING, COMPRESSION
724	3-641-616-00	s	NUT, TAPE GUIDE ADJUSTMENT
725	3-641-621-00	o	SCREW, HEAD ADJUSTING
726	3-641-622-00	s	SPRING, COMPRESSION
727	3-644-718-00	s	SPRING, COMPRESSION
728	3-645-076-00	o	WASHER, M-REEL S
729	3-647-815-00	o	PLATE, ADJUSTMENT, CTL HEAD
730	3-655-620-00	o	SUPPORT, GUIDE
731	3-655-625-00	o	SLEEVE, INNER
732	3-655-626-00	s	FLANGE
733	3-655-628-00	s	BEARING, BALL
735	3-655-638-00	o	SHIELD, TC HEAD
736	3-655-639-00	o	PLATE, SHIELD, TC
737	3-655-640-00	o	STOPPER, TAPE
738	3-655-652-00	o	BRACKET (2), E HEAD
739	3-655-668-01	s	GUIDE (F), TAPE
740	3-655-670-01	o	BRACKET (C), T.C
741	3-655-671-01	o	PLATE (C), ADJUSTMENT
742	3-655-672-01	o	BASE (C), TC
743	3-655-675-01	o	CASE (F), AU
744	3-655-676-01	o	BRACKET (A), CTL HEAD
745	3-655-677-01	o	BRACKET (B), CTL HEAD
746	3-655-678-01	o	CASE (B), AU
747	3-656-501-00	o	HOLDER, TERMINAL
748	3-656-502-00	o	PLATE, TERMINAL
749	3-660-102-00	s	GUIDE, TAPE
750	3-668-441-00	o	COVER, HARNESS
751	3-668-462-00	o	RETAINER, TM-4
752	3-668-472-02	o	PROTECTOR (R)
753	3-669-145-00	s	SCREW
754	3-671-307-00	o	PROTECTOR, BRUSH
755	3-671-323-00	o	BRACKET (A), BRUSH
756	3-671-324-00	o	BRACKET (B), BRUSH
757	3-688-807-01	s	FLANGE, TAPE GUIDE
758	8-825-544-20	s	HEAD, ERASE
759	8-825-578-30	s	HEAD, ACE (EPS264-5803A)
760	8-825-680-70	s	SLIP RING ASSY (VO-SR6)
761	8-829-371-11	s	HEAD, T/C (PP171-5802D)
762	8-838-019-01	s	MOTOR, DC (BHF-1600A)
763	3-668-293-00	o	GUARD, HEAD

764 3-655-674-01

Cassette-up Compartment Block

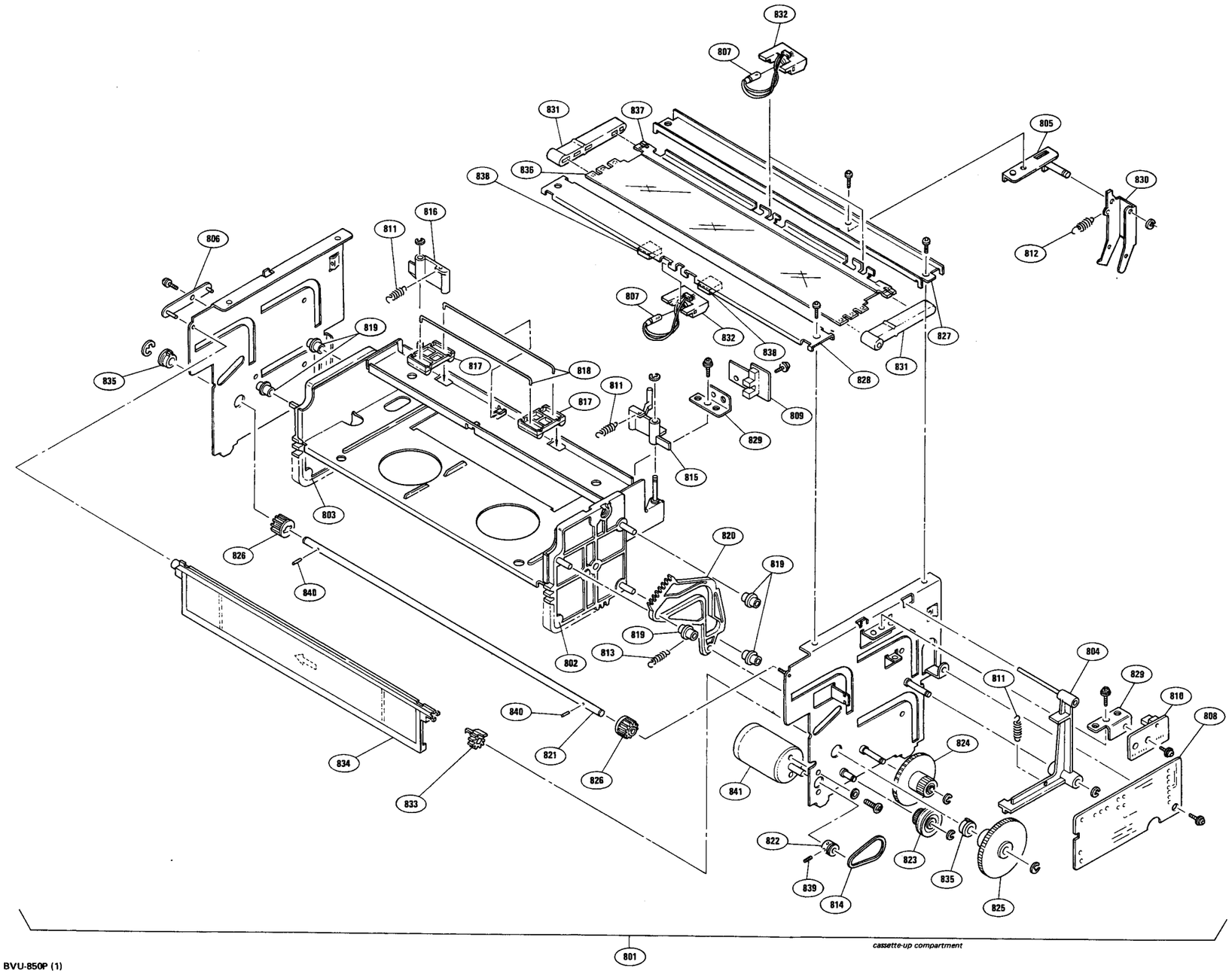

BVU-850P (1)

No.	Parts No.	SP	Description
801	A-6751-104-C	s	CASSETTE-UP ASSY
802	X-3668-057-0	s	RACK ASSY, (RIGHT)
803	X-3668-058-0	s	RACK ASSY, (LEFT)
804	X-3668-059-0	s	ARM ASSY, SWITCH, DOWN
805	X-3668-060-3	o	HOLDER ASSY, ARM
806	X-3668-061-0	o	SUPPORT ASSY, LID
807	1-518-508-00	s	LAMP, PILOT
808	1-604-429-00	o	PRINTED CIARUIT BOARD, CC-9
809	1-604-430-00	o	PRINTED CIRCUIT BOARD, CC-10
810	1-604-431-00	o	PRINTED CIRCUIT BOARD, CC-11
811	3-507-051-00	o	SPRING, TENSION
812	3-534-217-11	s	SPRING, TENSION
813	3-536-780-11	s	SPRING, TENSION
814	3-653-387-00	s	BELT, LM
815	3-668-295-00	o	LEVER (RIGHT), CASSETTE PUSH-OUT
816	3-668-296-00	o	LEVER (LEFT), CASSETTE PUSH-OUT
817	3-668-297-00	s	RETAINER, CASSETTE
818	3-668-298-00	o	SPRING
819	3-668-299-00	s	ROLLER, GUIDE
820	3-668-300-00	o	CAM, LID OPEN
821	3-668-301-00	o	SHAFT, DRIVING
822	3-668-302-00	s	PULLEY, MOTOR
823	3-668-303-00	s	GEAR (A)
824	3-688-304-00	s	GEAR (B)
825	3-668-305-00	s	GEAR (C)
826	3-668-306-00	s	GEAR (D)
827	3-668-307-02	s	JOINT (R)
828	3-668-308-03	o	JOINT (F)
829	3-668-309-00	o	BRACKET, SWITCH
830	3-668-310-02	o	ARM, LID OPEN
831	3-668-313-02	s	FRAME, SUPPORT, REFLECTOR
832	3-668-314-02	s	HOLDER, LAMP
833	3-668-315-02	s	GEAR, LID
834	3-668-371-00	s	LID, CASSETTE
835	3-668-474-00	s	BEARING (6)
836	3-672-604-11	s	REFLECTOR
837	3-672-639-03	s	BRACKET, LAMP
838	3-672-926-00	o	CUSHION, LID
839	3-701-506-01	s	SET SCREW, DOUBLE POINT 3x4
840	3-703-358-03	s	PIN, PARALLEL (DIA. 2x8)
841	8-835-055-01	s	MOTOR, DC (DNR-4700A)

Control Panel Block

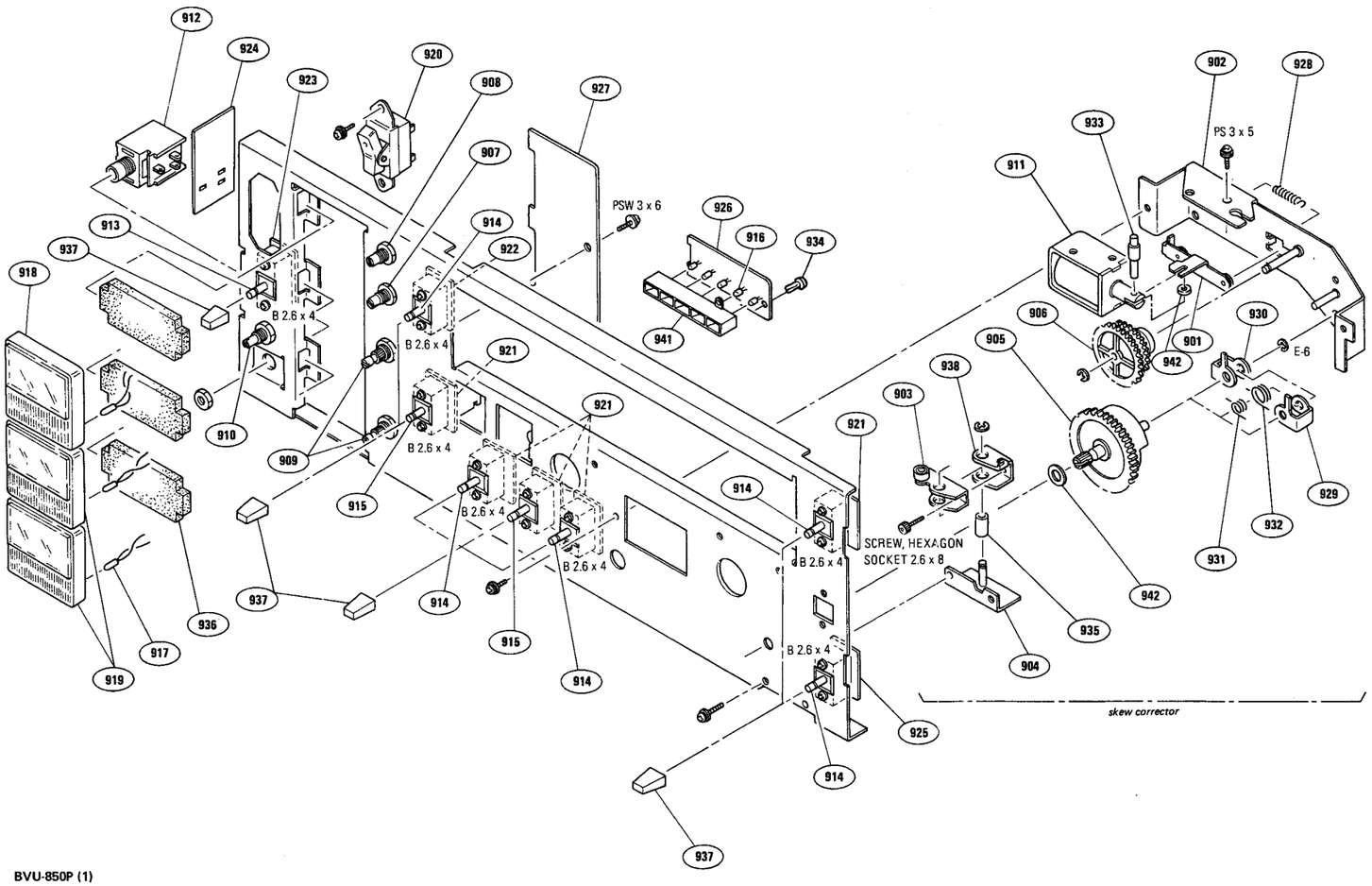

BVU-850P (1)

No.	Parts No.	SP	Description
901	X-3668-030-0	o	PLATE ASSY, LOCK, SK
902	X-3668-031-0	o	SUPPORT ASSY, SK
903	X-3668-033-0	o	LEVER (2) ASSY, S
904	X-3668-034-0	o	BRACKET ASSY, LEVER, S
905	X-3668-035-0	o	GEAR (3) ASSY, CLUTCH
906	X-3668-036-0	s	CLUTCH ASSY, SK
907	1-224-691-XX	s	RES, VAR, CARBON 10K
908	1-226-616-00	s	RES, VAR, CARBON 100K
909	1-228-140-00	s	RES, VAR, CARBON 20K/20K
910	1-228-218-00	s	RES, VAR, CARBON 500/500
911	1-454-278-00	s	SOLENOID
912	1-507-553-00	s	JACK, JM60 M-13S
913	1-516-963-00	s	SWITCH, LEVER SLIDE
914	1-516-994-00	s	SWITCH, LEVER SLIDE
915	1-516-995-00	s	SWITCH, LEVER SLIDE
916	1-518-259-00	s	LAMP, PILOT
917	1-518-461-00	s	LAMP, PILOT
918	1-520-438-00	s	METER, VIDEO
919	1-520-439-00	s	METER, VU
⚠ 920	1-570-117-31	s	SWITCH, ROCKER (AC POWER)
921	1-604-368-00	o	PRINTED CIRCUIT BOARD, MS-5
922	1-604-371-00	o	PRINTED CIRCUIT BOARD, LV-1
923	1-604-375-00	o	PRINTED CIRCUIT BOARD, AO-2
924	1-604-378-00	o	PRINTED CIRCUIT BOARD, HP-5
925	1-604-511-00	o	PRINTED CIRCUIT BOARD, PR-33
926	1-614-831-11	o	PRINTED CIRCUIT BOARD, LMP-1
927	1-615-161-11	o	PRINTED CIRCUIT BOARD, LP-33
928	3-537-219-00	s	SPRING, TENSION
929	3-642-403-00	o	LEVER
930	3-642-404-00	o	LEVER
931	3-642-405-00	s	SPRING
932	3-642-679-00	s	SPRING
933	3-645-051-03	o	PIN, D-PINCH PLUNGER
934	3-646-090-00	s	RIVET, NYLON
935	3-654-603-11	s	SPACER (3x11)
936	3-668-022-00	o	CUSHION, METER
937	3-668-028-00	s	KNOB (SMALL), LEVER SWITCH
938	3-668-111-00	o	LEVER (1), S
941	3-688-817-01	o	COVER, LAMP
942	3-701-444-21	s	WASHER, POLY 6MM DIA., 0.5T

Function Control Panel

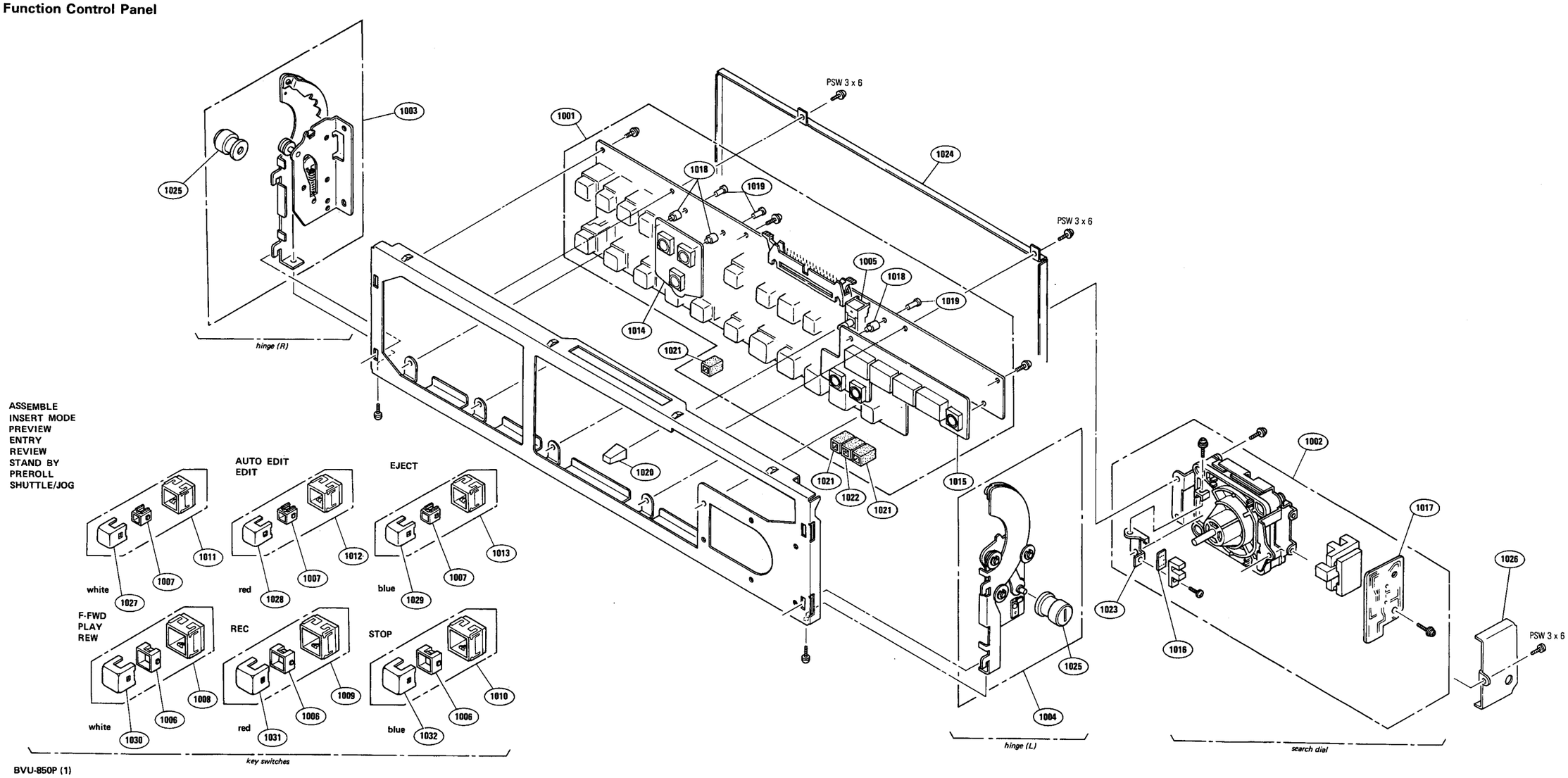

No.	Parts No.	SP	Description
1001	A-6717-205-A	o	MOUNTED CITCUIT BOARD, KY-9
1002	A-6734-106-A	s	DIAL ASSY, SEARCH
1003	A-6736-030-A	o	HINGE (LEFT) ASSY
1004	A-6736-031-A	o	HINGE (RIGHT) ASSY
1005	1-516-994-00	s	SWITCH, LEVER SLIDE
1006	1-518-450-21	s	LAMP, PILOT
1007	1-518-450-31	s	LAMP, PILOT
1008	1-553-551-11	s	SWITCH, PUSH (17 CORNER)
1009	1-553-551-21	s	SWITCH, PUSH (17 CORNER)
1010	1-553-551-32	s	SWITCH, PUSH (17 CORNER)

No.	Parts No.	SP	Description
1011	1-554-318-11	s	SWITCH, PUSH BUTTON (12 CORNER)
1012	1-554-318-21	s	SWITCH, PUSH BUTTON (12 CORNER)
1013	1-554-318-31	s	SWITCH, PUSH BUTTON (12 CORNER)
1014	1-604-347-00	o	PRINTED CIRCUIT BOARD, KY-14
1015	1-604-349-12	o	PRINTED CIRCUIT BOARD, DP-9
1016	1-604-351-00	o	PRINTED CIRCUIT BOARD, PC-9
1017	1-604-353-00	o	PRINTED CIRCUIT BOARD, PC-14
1018	3-659-487-00	s	HOLDER, BUZZER
1019	3-659-488-00	s	PIN, BUZZER HOLDER
1020	3-668-028-00	s	KNOB (SMALL), LEVER SWITCH

No.	Parts No.	SP	Description
1021	3-668-123-00	o	HOLDER, LAMP
1022	3-668-124-00	o	HOLDER, LED
1023	3-668-151-00	o	BRACKET, PC14
1024	3-668-327-00	o	COVER, KEY PANEL
1025	3-668-407-00	o	NUT, LOCK
1026	3-668-417-00	o	COVER, PROTECTION, PC9
1027	3-706-480-01	s	KEY TOP (WHITE)
1028	3-706-480-12	s	KEY TOP (RED)
1029	3-706-480-22	s	KEY TOP (BLUE)
1030	3-706-481-01	s	KEY TOP (WHITE)
1031	3-706-481-11	s	KEY TOP (RED)
1032	3-706-481-22	s	KEY TOP (BLUE)

Power Chassis Block

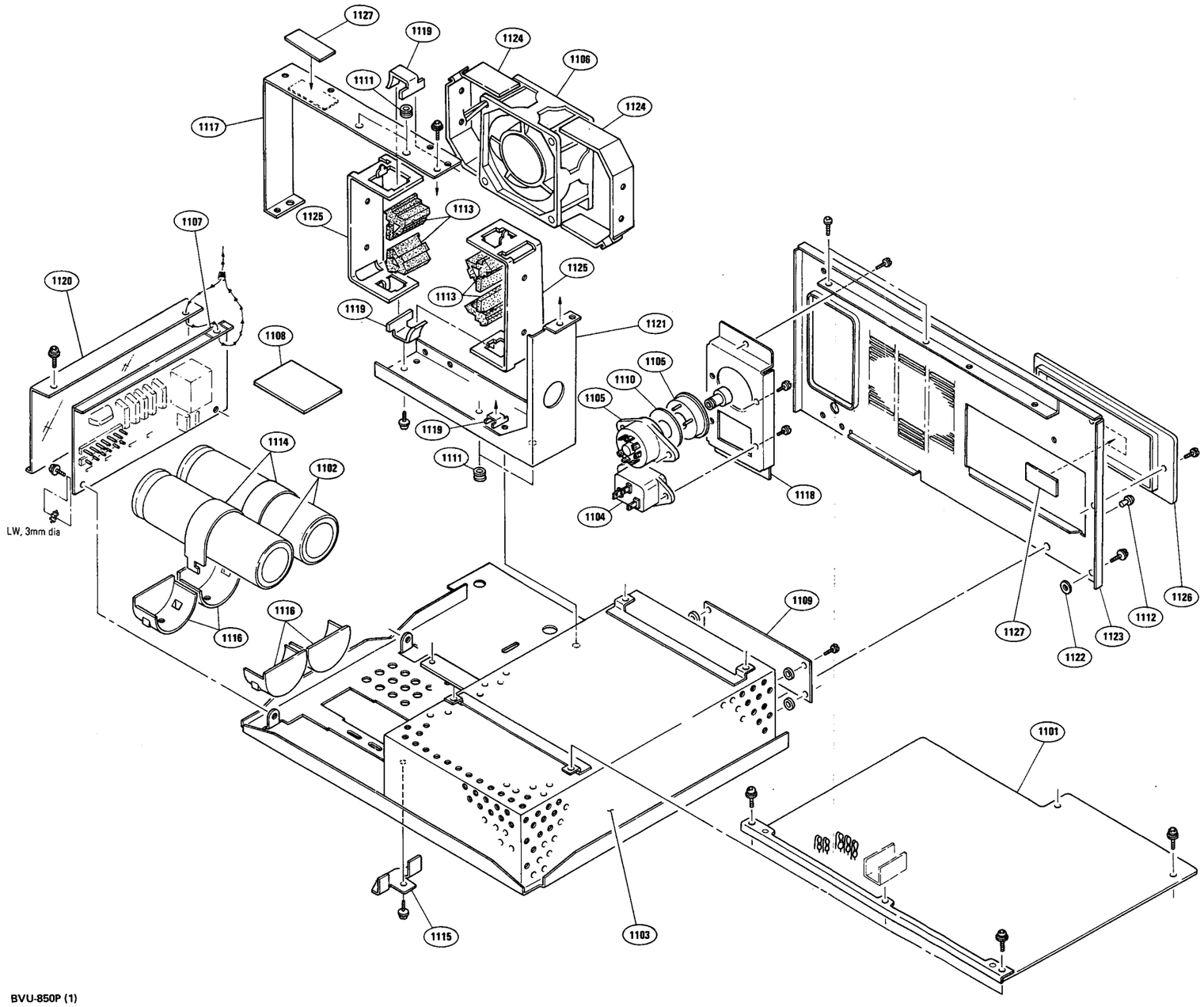

BVU-850P (1)

No.	Parts No.	SP	Description
1101	A-6723-158-C	o	MOUNTED CIRCUIT BOARD, PD-14
1102	1-125-250-00	s	CAP, ELECT 3300MF
⚠1103	1-413-071-23	o	SWITCHING REGULATOR
1104	1-509-546-00	s	3P INLET
1105	1-526-572-00	s	SOCKET, POWER VOLTAGE SELECT
1106	1-541-264-11	s	MOTOR, DC FAN
1107	1-604-363-17	o	PRINTED CIRCUIT BOARD, PW-50
1108	1-604-555-00	o	PRINTED CIRCUIT BOARD, PW-79
1109	1-605-936-00	o	PRINTED CIRCUIT BOARD, FU-16
1110	2-232-802-00	o	SEAL
1111	3-564-017-00	s	RUBBER, CUSHION
1112	3-646-090-11	s	RIVET, NYLON
1113	3-650-272-00	s	ABSORBER, VIBRATION, FAN
1114	3-668-154-00	o	BAND, C
1115	3-668-155-00	o	RETAINER, C
1116	3-668-157-00	o	RETAINER, C
1117	3-668-158-00	o	FRAME (B), FAN
1118	3-668-159-00	o	BRACKET, V.S
1119	3-668-164-00	o	FASTENER, F
1120	3-668-369-00	o	PROTECTOR, PW
1121	3-668-370-00	o	FRAME (A), FAN
1122	3-668-413-00	o	WASHER (M3), STOP
1123	3-668-422-00	o	PANEL, PS
1124	3-672-994-01	o	PLATE, SHIELD, FAN
1125	3-672-995-01	o	HOLDER, FAN
1126	3-688-827-01	o	COVER, FUSE
1127	3-703-044-26	o	LABEL, CAUTION

Connector Panel Block (1)

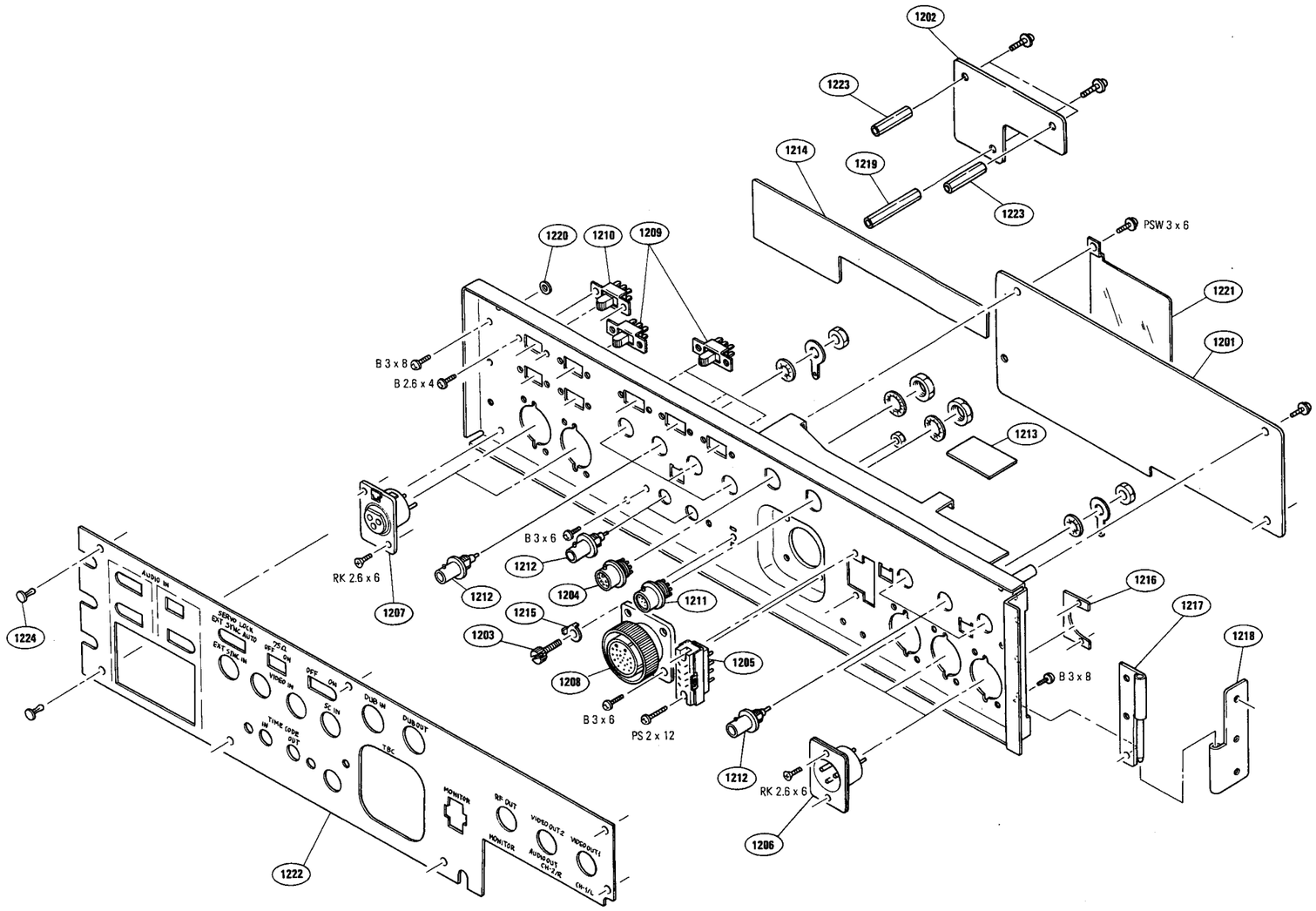

BVU-850P (1)

No.	Parts No.	SP	Description
1201	A-6713-106-A	o	MOUNTED CIRCUIT BOARD, AO-3
1202	A-6713-223-A	o	MOUNTED CIRCUIT BOARD, CP-92
1203	X-2068-004-0	s	TERMINAL ASSY
1204	1-508-945-00	s	RECEPTACLE, 7P (MALE)
1205	1-509-095-00	s	8P MULTI SOCKET
1206	1-509-176-00	s	RECEPTACLE, XLR (MALE)
1207	1-509-184-00	s	RECEPTACLE, XLR (FEMALE)
1208	1-509-471-00	s	RECEPTACLE, 18P (FEMALE)
1209	1-516-777-XX	s	SLIDE SWITCH
1210	1-516-783-XX	s	SLIDE SWITCH
1211	1-561-045-00	s	RECEPTACLE, 7P (FEMALE)
1212	1-561-781-21	s	RECEPTACLE, BNC
1213	1-606-977-00	o	PRINTED CIRCUIT BOARD, TM-14
1214	1-614-869-11	o	PRINTED CIRCUIT BOARD, CP-93
1215	2-068-008-00	s	WASHER
1216	2-232-914-00	o	PLATE NUT, XLR
1217	3-651-651-00	o	HINGE (A)
1218	3-651-652-00	o	HINGE (B)
1219	3-668-135-00	o	SUPPORT (A)
1220	3-668-413-00	o	WASHER (M3), STOP
1221	3-672-975-00	o	INSULATOR, AO-3
1222	3-688-826-01	o	PLATE, ORNAMENTAL, PANEL
1223	3-688-834-01	o	SUPPORT (A), AU
1224	4-812-134-11	s	RIVET NYLON, 3.5

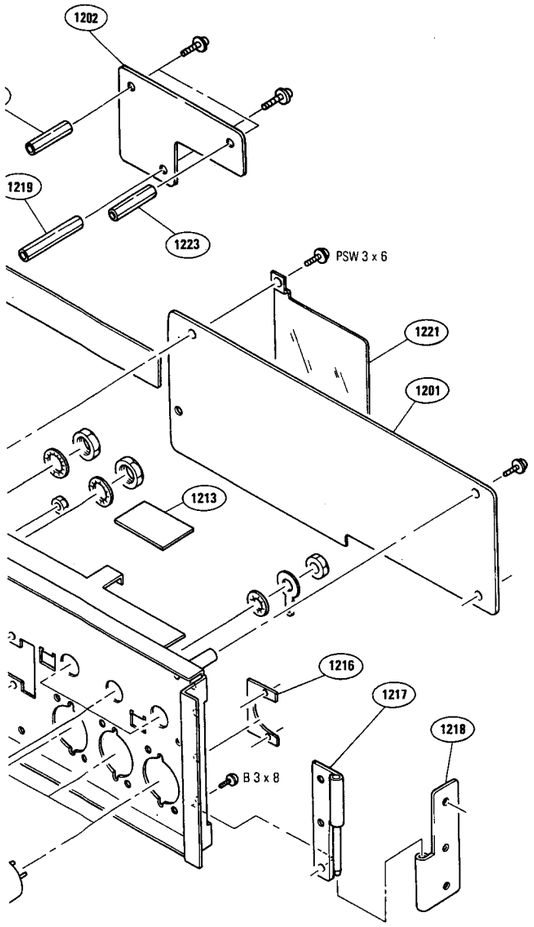

No.	Parts No.	SP	Description
1201	A-6713-106-A	o	MOUNTED CIRCUIT BOARD, AO-3
1202	A-6713-223-A	o	MOUNTED CIRCUIT BOARD, CP-92
1203	X-2068-004-0	s	TERMINAL ASSY
1204	1-508-945-00	s	RECEPTACLE, 7P (MALE)
1205	1-509-095-00	s	8P MULTI SOCKET
1206	1-509-176-00	s	RECEPTACLE, XLR (MALE)
1207	1-509-184-00	s	RECEPTACLE, XLR (FEMALE)
1208	1-509-471-00	s	RECEPTACLE, 18P (FEMALE)
1209	1-516-777-XX	s	SLIDE SWITCH
1210	1-516-783-XX	s	SLIDE SWITCH
1211	1-561-045-00	s	RECEPTACLE, 7P (FEMALE)
1212	1-561-781-21	s	RECEPTACLE, BNC
1213	1-606-977-00	o	PRINTED CIRCUIT BOARD, TM-14
1214	1-614-869-11	o	PRINTED CIRCUIT BOARD, CP-93
1215	2-068-008-00	s	WASHER
1216	2-232-914-00	o	PLATE NUT, XLR
1217	3-651-651-00	o	HINGE (A)
1218	3-651-652-00	o	HINGE (B)
1219	3-668-135-00	o	SUPPORT (A)
1220	3-668-413-00	o	WASHER (M3), STOP
1221	3-672-975-00	o	INSULATOR, AO-3
1222	3-688-826-01	o	PLATE, ORNAMENTAL, PANEL
1223	3-688-834-01	o	SUPPORT (A), AU
1224	4-812-134-11	s	RIVET NYLON, 3.5

Connector Panel Block (2)

S/N 10041 – 10390

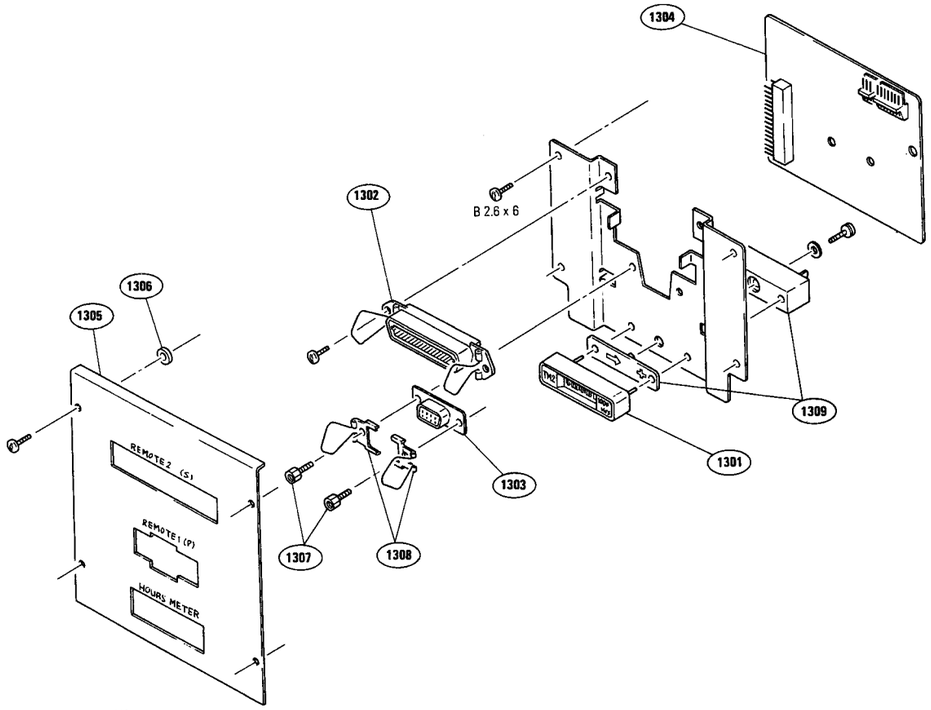

BVU-850P (2)

No.	Parts No.	SP	Description
1301	1-548-141-41	s	TIMER
1302	1-561-028-00	s	CONNECTOR, 36P
1303	1-561-655-00	s	CONNECTOR, 9P
1304	1-604-370-00	o	PRINTED CIRCUIT BOARD, RM-4
1305	3-668-343-00	o	PANEL (RIGHT LOWER), CONNECTOR
1306	3-668-413-00	o	WASHER (M3), STOP
1307	3-668-459-00	o	SCREW, CONNECTOR
1308	3-668-460-00	o	SPRING
1309	1-526-829-31	s	SOCKET, TIMER

S/N 10391 and Higher

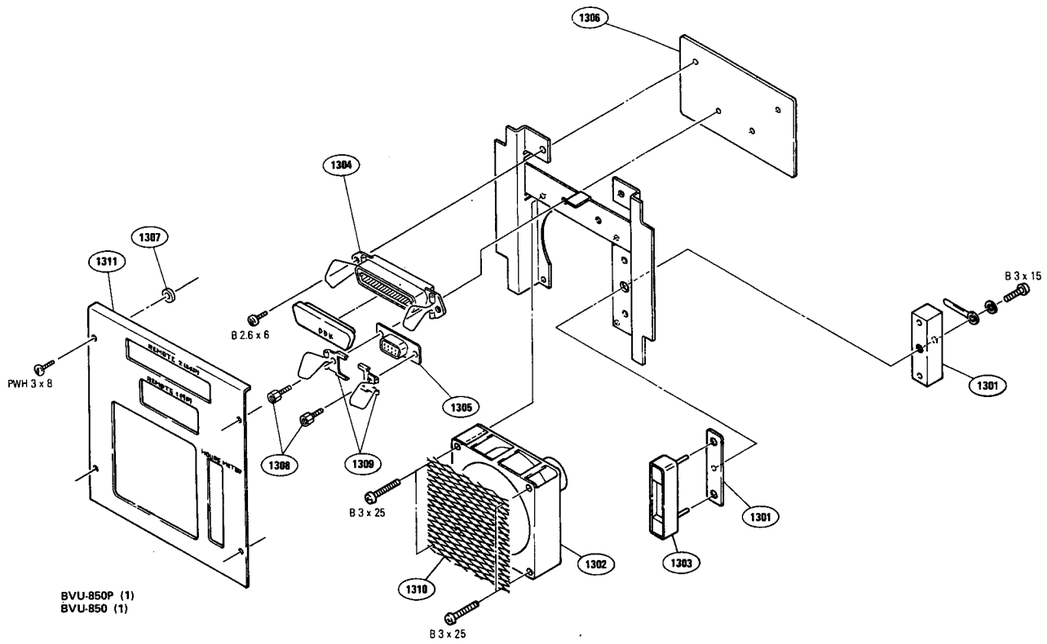

BVU-850P (1)
BVU-850 (1)

No.	Parts No.	SP	Description
1301	1-526-829-31	s	SOCKET, TIMER
1302	1-541-209-11	s	MOTOR, BRUSHLESS FAN (DC)
1303	1-548-141-41	s	TIMER
1304	1-561-028-00	s	CONNECTOR, 36P
1305	1-561-655-00	s	CONNECTOR, 9P
1306	1-616-865-11	o	PRINTED CIRCUIT BOARD, RM-35
1307	3-668-413-00	o	WASHER (M3), STOP
1308	3-668-459-00	o	SCREW, CONNECTOR
1309	3-668-460-00	o	SPRING
1310	3-675-898-00	o	PLATE, VENTILATION
1311	3-688-855-01	o	PANEL (RIGHT LOWER), CONNECTOR

S/N 10391 and Higher

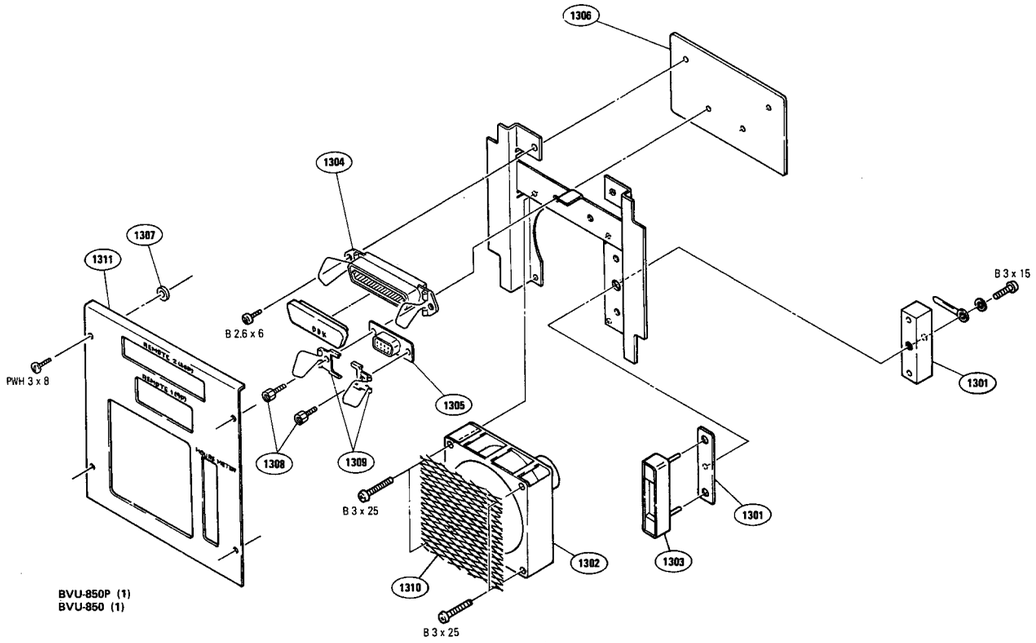

BVU-850P (1)
BVU-850 (1)

No.	Parts No.	SP	Description
1301	1-526-829-31	s	SOCKET, TIMER
1302	1-541-209-11	s	MOTOR, BRUSHLESS FAN (DC)
1303	1-548-141-41	s	TIMER
1304	1-561-028-00	s	CONNECTOR, 36P
1305	1-561-655-00	s	CONNECTOR, 9P
1306	1-616-865-11	o	PRINTED CIRCUIT BOARD, RM-35
1307	3-668-413-00	o	WASHER (M3), STOP
1308	3-668-459-00	o	SCREW, CONNECTOR
1309	3-668-460-00	o	SPRING
1310	3-675-898-00	o	PLATE, VENTILATION
1311	3-688-855-01	o	PANEL (RIGHT LOWER), CONNECTOR

Chassis Block

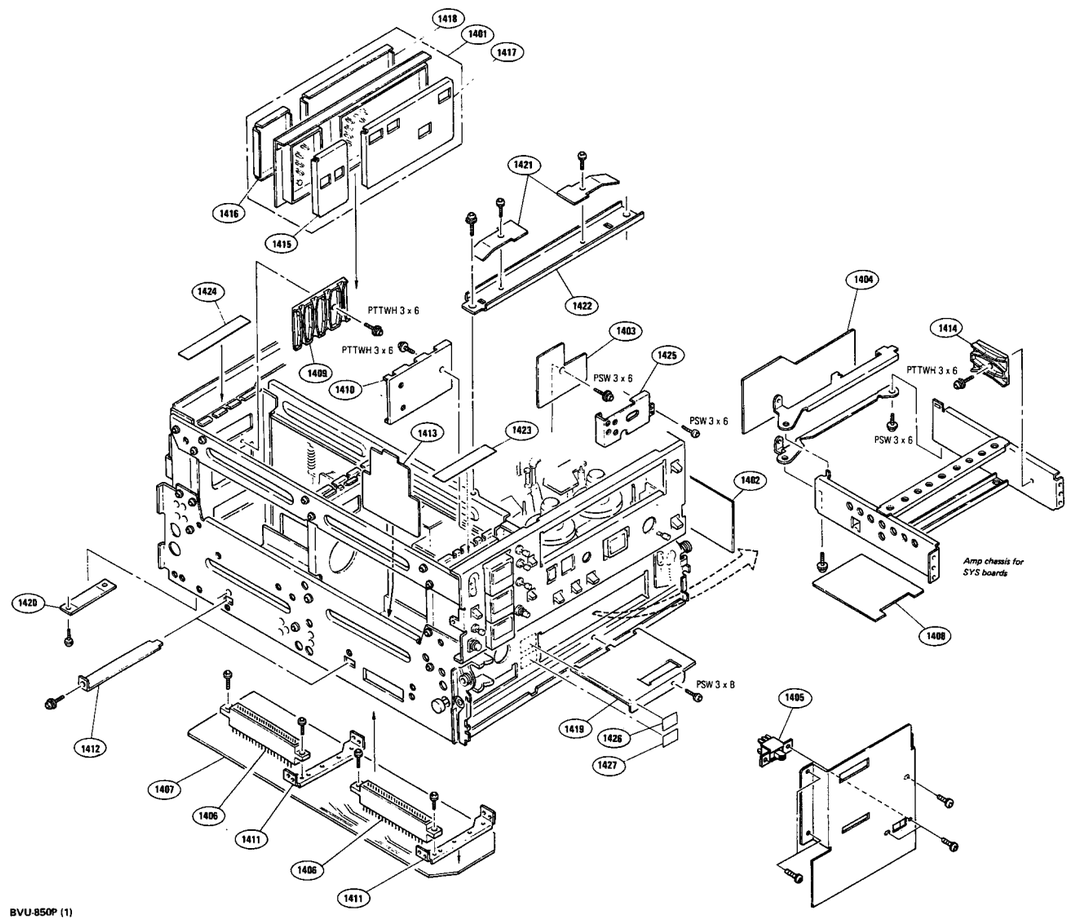

BVU-850P (1)

No.	Parts No.	SP	Description
1401	A-6711-597-A	o	MOUNTED CIRCUIT BOARD, RP-18
1402	A-6717-208-A	o	MOUNTED CIRCUIT BOARD, SY-71
1403	A-6725-227-B	o	MOUNTED CIRCUIT BOARD, RE-3
1404	A-6728-238-A	o	NOUNTED CIRCUIT BOARD, MB-9
1405	1-514-524-00	s	SLIDE SWITCH
1406	1-561-654-00	o	CONNECTOR, CARD 86P
1407	1-614-862-11	o	PRINTED CIRCUIT BOARD, MB-18
1408	3-668-119-00	o	PROTECTOR, MB-9
1409	3-668-129-02	o	GUIDE (3), PC BOARD
1410	3-668-130-00	o	GUIDE (4), PC BOARD
1411	3-668-131-02	o	BRACKET (A), CN
1412	3-668-132-00	o	BRACKET (B), CN
1413	3-668-133-00	o	PROTECTOR, MB-8
1414	3-668-134-00	o	GUIDE (2), PC BOARD
1415	3-668-138-00	o	COVER, UPPER, SHIELD CASE (A)
1416	3-668-139-00	o	COVER, LOWER, SHIELD CASE (A)
1417	3-668-361-00	o	COVER, UPPER, SHIELD CASE (B)
1418	3-668-362-00	o	COVER, LOWER, SHIELD CASE (B)
1419	3-668-423-00	o	RETAINER (FRONT), FC
1420	3-668-424-00	o	RETAINER (REAR), FC
1421	3-668-425-00	s	SPRING
1422	3-668-426-00	s	STAY, CASSETTE COMPARTMENT
1423	3-668-438-00	o	LABEL (1), PC BOARD
1424	3-665-439-00	o	LABEL (2), PC BOARD
1425	3-668-440-00	o	PROTECTOR, RE
1426	3-668-485-00	o	LABEL (3), PC BOARD
1427	3-668-486-00	o	LABEL (4), PC BOARD

Ornamental Panel Block (1)

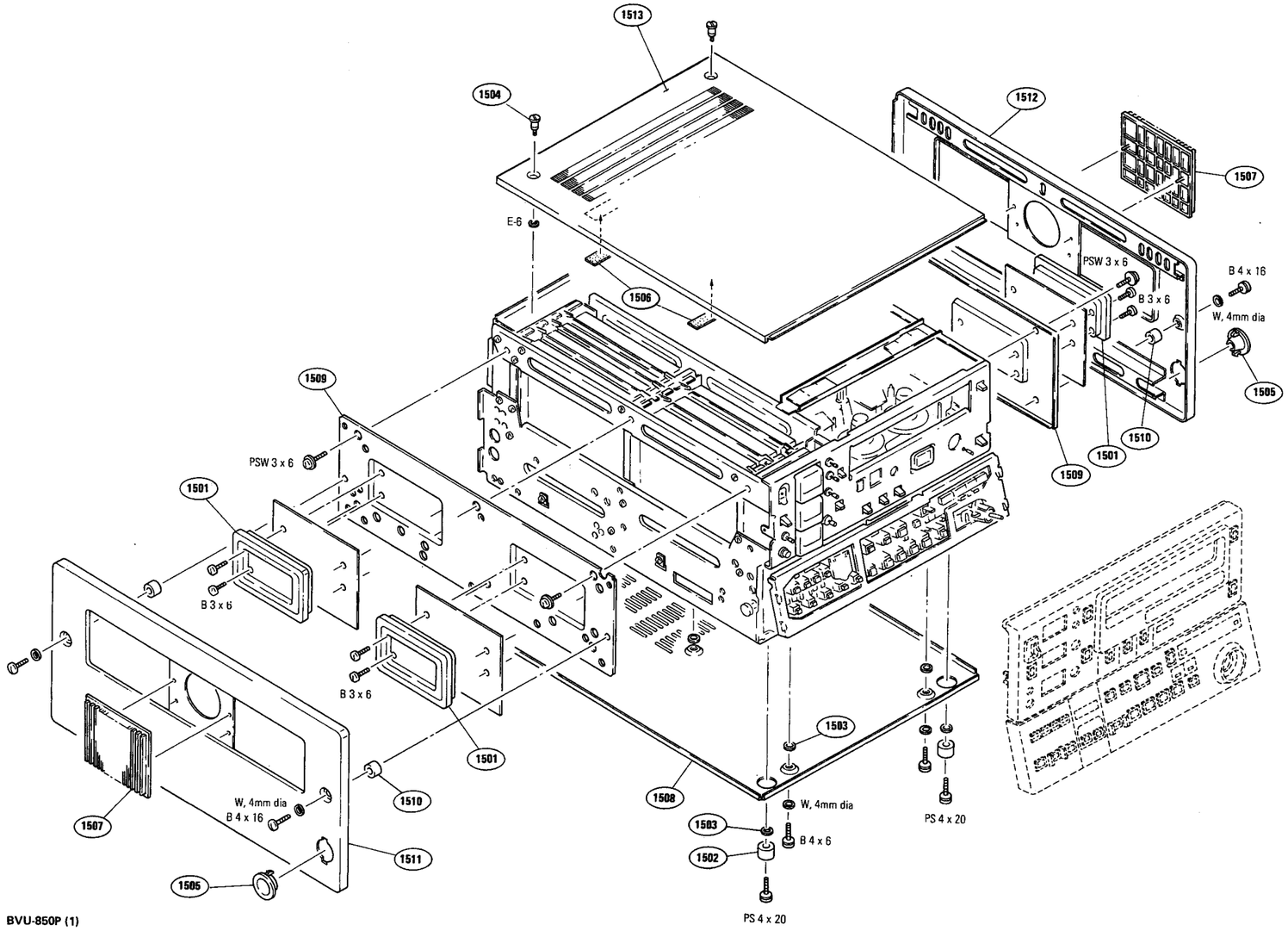

BVU-850P (1)

No.	Parts No.	SP	Description
1501	X-3642-018-0	s	HANDLE ASSY
1502	X-4839-902-0	s	FOOT
1503	3-650-537-00	o	WASHER
1504	3-668-024-00	s	SCREW, COIN, CABINET
1505	3-668-025-04	o	ESCUTCHEON, HINGE STOPPER
1506	3-668-026-00	o	RETAINER, PC
1507	3-668-335-00	o	ORNAMENT, SIDE PLATE
1508	3-668-375-00	o	PLATE, BOTTOM
1509	3-668-382-00	o	BRACKET, HANDLE
1510	3-668-416-00	o	SPACER, BRACKET, M4
1511	3-668-418-04	o	PLATE, SIDE, LEFT
1512	3-668-419-04	o	PLATE, SIDE, RIGHT
1513	3-668-420-04	o	LID, UPPER

Ornamental Panel Block (2)

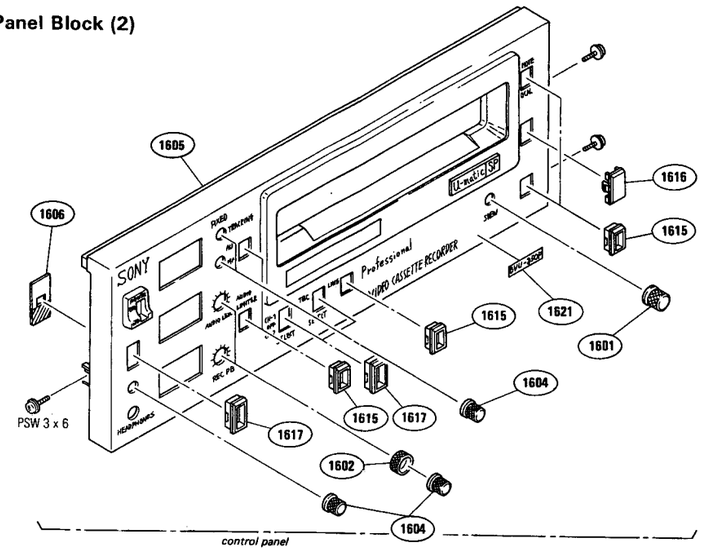

BVU-850P (1)

No.	Parts No.	SP	Description
1601	X-3651-342-0	s	KNOB ASSY, CONTROL
1602	X-3668-056-0	s	KNOB (W) ASSY, CONTROL
1603	X-3668-068-7	o	PANEL SUB ASSY, KEY
1604	X-3668-075-0	s	KNOB ASSY, CONTROL
1605	X-3668-079-0	o	FRONT PANEL ASSY, P SUB
1606	2-252-623-00	o	PLATE, SWITCH, LEVER
1607	3-657-986-00	o	GUARD, REC
1608	3-668-006-02	s	PUSH BUTTON (15x8)
1609	3-668-007-02	s	PUSH BUTTON (5x9)
1610	3-668-008-02	s	PUSH BUTTON (3x5)
1611	3-668-009-02	s	PIN, PUSH BUTTON
1612	3-668-012-00	s	RUBBER, DIAL KNOB
1613	3-668-013-00	s	KNOB, DIAL
1614	3-668-015-00	o	PLATE (SMALL), SWITCH, LEVER
1615	3-668-016-00	o	FRAME (SMALL), ORNAMENTAL
1616	3-668-017-11	o	FRAME (MIDDLE), BLIND, SWITCH
1617	3-668-018-00	o	FRAME (MIDDLE), ORNAMENTAL
1618	3-675-891-00	o	ESCUTCHEON, BUTTON (LARGE)
1619	3-675-892-00	o	ESCUTSHEON, BUTTON (SMALL)
1621	3-688-818-01	o	LABEL
1622	4-309-349-00	s	SPRING, COIL

Printed Circuit Board

MD-25 Board
YD-17 Board
CD-29 Board

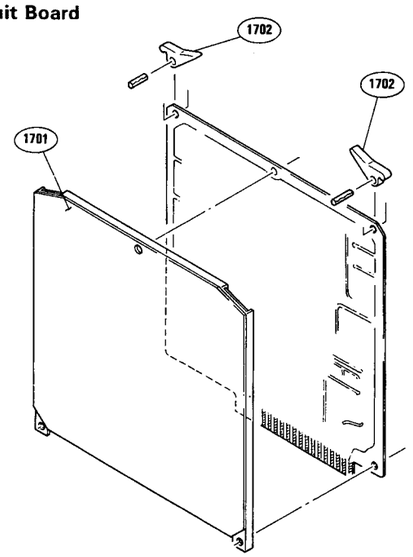

TC-13 Board
SV-52A Board

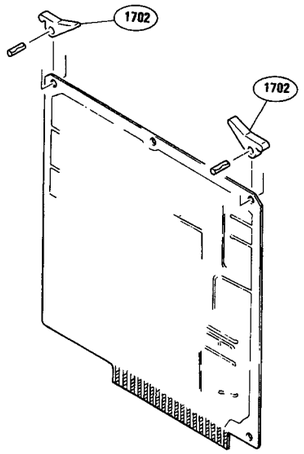

RS-3 Board
AU-62 Board

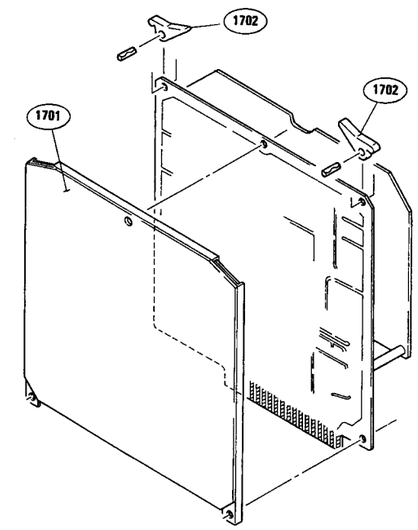

SY-36 Board
SY-37A Board

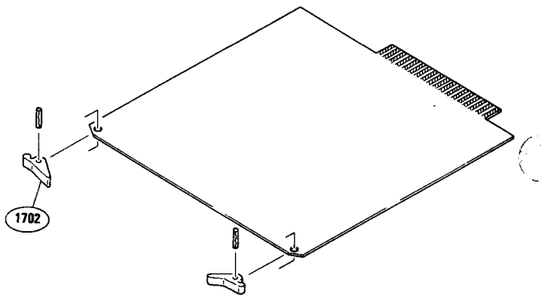

BVU-850P (1)

No.	Parts No.	SP	Description
1701	X-3668-082-2	o	CASE (A) ASSY, SHIELD
1702	2-251-622-00	o	LEVER, PC BOARD

Supplied Accessory

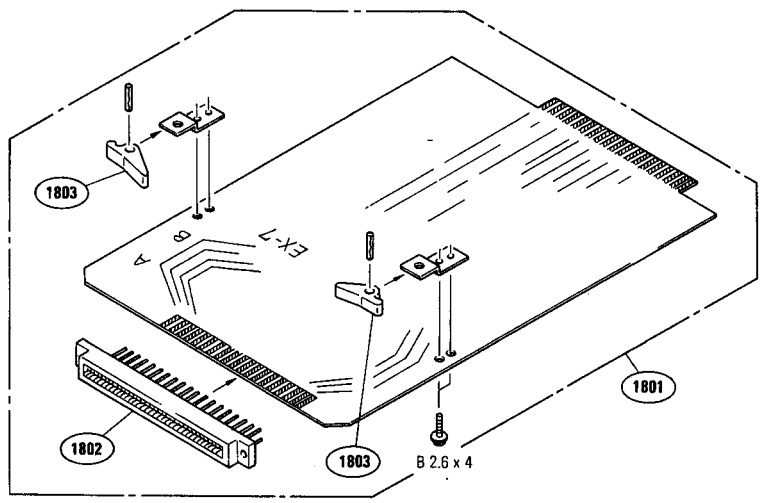

BVU-850P (1)

No.	Parts No.	SP	Description
1801	A-6724-244-A	s	EX-7 ASSY
1802	1-561-654-00	o	CONNECTOR, CARD 86P
1803	2-251-622-00	o	LEVER, PC BOARD

19-3. ELECTRICAL PARTS LIST

ABBREVIATIONS

Ref. No.	Description	Ref. No.	Description	Ref. No.	Description
C□□, CV□□	CAPACITOR	IC□□	IC	R□□, RV□□	RESISTOR
CN□□	CONNECTOR	L□□, LV□□	INDUCTOR	RY□□	RELAY
CP□□	COMBINATION PARTS	M□□	MOTOR	S□□	SWITCH
D□□	DIODE	ME□□	METER	SB□□	SOLAR BATTERY
DL□□	DELAY LINE	PL□□	LAMP	T□□	TRANSFORMER
F□□	FUSE	PM□□	SOLENOID	TH□□	THERMISTOR
FL□□	FILTER	Q□□	TRANSISTOR	X□□	CRYSTAL
H□□	HEAD				

All capacitors are in micro farads unless otherwise specified.

All inductors are in micro henries unless otherwise specified.

All resistors are in ohms.

Parts that are not listed in the "reference numbers order list" are shown in following table.
Reference numbers are omitted.

CAPACITOR

SILVERED MICA CAPACITOR — 1 pF through 620 pF ±5%, 50WV

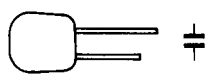

Parts No. 1-107-□□□-00

Value	Parts No. -□□□-	Value	Parts No. -□□□-	Value	Parts No. -□□□-	Value	Parts No. -□□□-
1 pF	098	15 pF	065	51 pF	078	180 pF	091
2	099	16	066	56	079	200	092
3	100	18	067	62	080	220	093
4	101	20	068	68	081	240	094
5	102	22	069	75	082	270	095
6	103	24	070	82	083	300	096
7	104	27	071	91	084	330	097
8	105	30	072	100	085	360	231
9	106	33	073	110	086	390	232
10	061	36	074	120	087	430	233
11	062	39	075	130	088	470	234
12	063	43	076	150	089	510	235
13	064	47	077	160	090	560	236
						620	237

MYLAR CAPACITOR

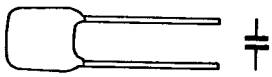

0.001μF through 0.22μF
±5% 50WV

Parts No. 1-108-□□□-00

Value	Parts No. −□□□−
0.001μF	555
0.0011	556
0.0012	557
0.0013	558
0.0015	559
0.0016	560
0.0018	561
0.0020	562
0.0022	563
0.0024	564
0.0027	565
0.0030	566
0.0033	567
0.0036	568
0.0039	569
0.0043	570
0.0047	571
0.0051	572
0.0056	573
0.0062	574
0.0068	575
0.0075	576
0.0082	577
0.0091	578
0.01	579
0.011	580
0.012	581
0.013	582
0.015	583

Value	Parts No. −□□□−
0.016μF	584
0.018	585
0.020	586
0.022	587
0.024	588
0.027	589
0.030	590
0.033	591
0.036	592
0.039	593
0.043	594
0.047	595
0.051	596
0.056	597
0.062	598
0.068	599
0.075	600
0.082	601
0.091	602
0.1	603
0.11	604
0.12	605
0.13	606
0.15	607
0.16	608
0.18	609
0.20	610
0.22	611

CERAMIC CAPACITOR

0.001μF through 0.1μF
50WV

Parts No. 1-161-□□□-00

Value	Parts No. −□□□−	Substitute
0.001 μF	039	(1-102-074-00)
0.0012	040	
0.0015	041	
0.0018	042	
0.0022	043	(1-102-100-00)
0.0027	044	
0.0033	045	
0.0039	046	(1-102-124-00)
0.0047	047	
0.0056	048	
0.0068	049	
0.0082	050	

Value	Parts No. −□□□−	Substitute
0.01 μF	051	(1-101-118-00)
0.012	052	
0.015	053	
0.018	054	
0.022	055	(1-101-005-00)
0.027	056	
0.033	057	
0.039	058	
0.047	059	(1-101-006-00)
0.056	060	
0.068	061	
0.082	062	
0.1	063	

TANTALUM CAPACITOR

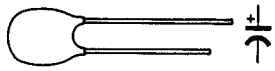

0.01μF through 100μF ± 10%
3.15V through 35V

NOTE: The value of the parts that are marked by * in the below table are indicated by color code. (to the value with ±20%)

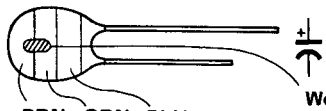

Ex. BRN GRN BLU
1 5 6

15×10^6 pF = 15μF

Working Voltage Color Code

BLK	RED	YEL	GRN	BLU	GRY	WHT
10V	35	6.3	16	20	25	3.15

Parts No. 1-131-□□□-00

Value		Parts No. −□□□−
0.01μ	35V	*396
0.015	35	*397
0.022	35	*398
0.033	35	*399
0.047	35	*400
0.068	35	*401
0.1	35	341
0.15	35	342
0.22	35	343
0.33	25	*409
	35	344
0.47	20	*412
	35	345
0.68	16	*415
	25	*410
	35	346
1.0	10	*418
	25	498

Value		Parts No. −□□□−
1.0μ	35V	347
1.5	6.3	*421
	20	499
	25	354
	35	348
2.2	3.15	*424
	16	500
	20	361
	25	355
	35	349
3.3	10	501
	16	368
	20	362
	25	356
	35	350
4.7	6.3	502
	10	375
	16	369

Value		Parts No. −□□□−
4.7μ	20V	363
	25	357
	35	351
6.8	3.15	503
	6.3	382
	10	376
	16	370
	20	364
	25	358
	35	352
10	3.15	389
	6.3	383
	10	377
	16	371
	20	365
	25	359
	35	353
15	3.15	390
	6.3	384

Value		Parts No. −□□□−
15μ	10V	378
	16	372
	20	366
	25	360
22	3.15	391
	6.3	385
	10	379
	16	373
	20	367
33	3.15	392
	6.3	386
	10	380
	16	374
47	3.15	393
	6.3	387
	10	381
68	3.15	394
	6.3	388
100	3.15	395

ELECTROLYTIC CAPACITOR

0.1μF through 100μF ±20%
4WV through 50WV

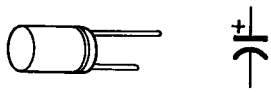

Parts No. 1-124-□□□-00

Value		Part No. −□□□−
0.1μF	50V	249
0.15	50	250
0.22	50	251
0.33	50	252
0.47	50	253
0.68	50	254
1	50	255
1.5	50	256
2.2	35	
	50	257
3.3	25	
	35	
	50	258
4.7	16	245

Value		Part No. −□□□−
4.7μF	25V	
	35	245
	50	259
6.8	10	
	16	
	25	239
	35	246
	50	260
10	6.3	
	10	
	16	233
	25	240
	35	247
	50	261

Value		Part No. −□□□−
22μF	6.3V	222
	10	
	16	234
	25	
	35	248
33	4	220
	6.3	
	10	229
	16	
	25	242
47	6.3	224
	10	
	16	236
100	6.3	225

CONNECTOR

top-type receptacle

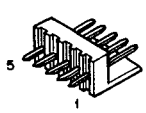

3P	1-560-008-00
5P	1-560-009-00
6P	1-560-010-00
8P	1-560-011-00
10P	1-560-012-00
12P	1-560-013-00

side-type receptacle

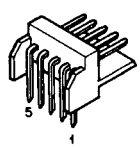

3P	1-560-014-00
5P	1-560-015-00
6P	1-560-016-00
8P	1-560-017-00
10P	1-560-018-00
12P	1-560-019-00

plug

housing

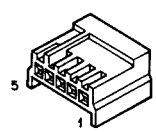

3P	1-561-155-00
5P	1-561-156-00
6P	1-561-157-00
8P	1-561-158-00
10P	1-561-159-00
12P	1-561-160-00

contact

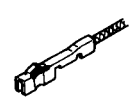

1-560-006-00
(AWG 20 ~ 26)

1-560-007-00
(AWG 26 ~ 30)

INDUCTOR

MICRO INDUCTOR

1 μH through 470 μH
±5%

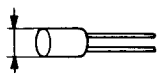

5mm dia

Parts No. 1-407-□□□-XX

Value	Parts No. -□□□-	Value	Parts No. -□□□-	Value	Parts No. -□□□-	Value	Parts No. -□□□-
1 μH	178	4.7 μH	186	22 μH	161	100 μH	169
1.2	179	5.6	187	27	162	120	170
1.5	180	6.8	188	33	163	150	171
1.8	181	8.2	189	39	164	180	172
2.2	182	10	157	47	165	220	173
2.7	183	12	158	56	166	270	174
3.3	184	15	159	68	167	330	175
3.9	185	18	160	82	168	390	176
						470	177

MICRO INDUCTOR

470 μH through 33 mH
±5%

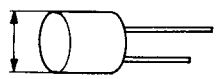

10mm dia

Parts No. 1-407-□□□-00

Value	Parts No. -□□□-	Value	Parts No. -□□□-	Value	Parts No. -□□□-	Value	Parts No. -□□□-
470 μH	488	1.5 mH	494	4.7 mH	500	15 mH	506
560	489	1.8	495	5.6	501	18	507
680	490	2.2	496	6.8	502	22	508
820	491	2.7	497	8.2	503	27	509
1 mH	492	3.3	498	10	504	33	510
1.2	493	3.9	499	12	505		

RESISTOR

CARBON RESISTOR (1/4W)

±5%, 1/4W, non-special type
1 Ω through 1 MΩ

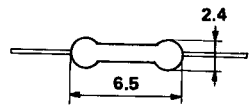

Parts No. 1-246-□□□-00

Value	Parts No. –□□□–
1 Ω	401
1.1	402
1.2	403
1.3	404
1.5	405
1.6	406
1.8	407
2	408
2.2	409
2.4	410
2.7	411
3	412
3.3	413
3.6	414
3.9	415
4.3	416
4.7	417
5.1	418
5.6	419
6.2	420
6.8	421
7.5	422
8.2	423
9.1	424
10 Ω	425
11	426
12	427
13	428
15	429
16	430
18	431
20	432
22	433
24	434
27	435
30	436

Value	Parts No. –□□□–
33 Ω	437
36	438
39	439
43	440
47	441
51	442
56	443
62	444
68	445
75	446
82	447
91	448
100 Ω	449
110	450
120	451
130	452
150	453
160	454
180	455
200	456
220	457
240	458
270	459
300	460
330	461
360	462
390	463
430	464
470	465
510	466
560	467
620	468
680	469
750	470
820	471
910	472

Value	Parts No. –□□□–
1 kΩ	473
1.1	474
1.2	475
1.3	476
1.5	477
1.6	478
1.8	479
2	480
2.2	481
2.4	482
2.7	483
3.0	484
3.3	485
3.6	486
3.9	487
4.3	488
4.7	489
5.1	490
5.6	491
6.2	492
6.8	493
7.5	494
8.2	495
9.1	496
10 kΩ	497
11	498
12	499
13	500
15	501
16	502
18	503
20	504
22	505
24	506
27	507
30	508

Value	Parts No. –□□□–
33 kΩ	509
36	510
39	511
43	512
47	513
51	514
56	515
62	516
68	517
75	518
82	519
91	520
100 kΩ	521
110	522
120	523
130	524
150	525
160	526
180	527
200	528
220	529
240	530
270	531
300	532
330	533
360	534
390	535
430	536
470	537
510	538
560	539
620	540
680	541
750	542
820	543
910	544
1 MΩ	545

CARBON RESISTOR (1/6W)

±5%, 1/6W, non-special type
2.2Ω through 1MΩ

Parts No. 1-247-□□□-00

Value	Parts No. −□□□−
1Ω	–
1.1	–
1.2	–
1.3	–
1.5	–
1.6	–
1.8	–
2	–
2.2	767
2.4	768
2.7	769
3	770
3.3	771
3.6	772
3.9	773
4.3	774
4.7	775
5.1	776
5.6	777
6.2	778
6.8	779
7.5	780
8.2	781
9.1	782
10Ω	783
11	784
12	785
13	786
15	787
16	788
18	789
20	790
22	791
24	792
27	793
30	794
33	795

Value	Parts No. −□□□−
36Ω	796
39	797
43	798
47	799
51	800
56	801
62	802
68	803
75	804
82	805
91	806
100Ω	807
110	808
120	809
130	810
150	811
160	812
180	813
200	814
220	815
240	816
270	817
300	818
330	819
360	820
390	821
430	822
470	823
510	824
560	825
620	826
680	827
750	828
820	829
910	830
1kΩ	831
1.1	832

Value	Parts No. −□□□−
1.2kΩ	833
1.3	834
1.5	835
1.6	836
1.8	837
2	838
2.2	839
2.4	840
2.7	841
3	842
3.3	843
3.6	844
3.9	845
4.3	846
4.7	847
5.1	848
5.6	849
6.2	850
6.8	851
7.5	852
8.2	853
9.1	854
10kΩ	855
11	856
12	857
13	858
15	859
16	860
18	861
20	862
22	863
24	864
27	865
30	866
33	867
36	868
39	869

Value	Parts No. −□□□−
43kΩ	870
47	871
51	872
56	873
62	874
68	875
75	876
82	877
91	878
100kΩ	879
110	880
120	881
130	882
150	883
160	884
180	885
200	886
220	887
240	888
270	889
300	890
330	891
360	892
390	893
430	894
470	895
510	896
560	897
620	898
680	899
750	900
820	901
910	902
1MΩ	903

METAL FILM RESISTOR

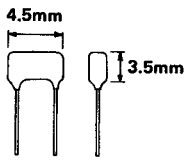

± 1%, 1/8W

Parts No. 1-214-□□□-00 (10Ω through 33kΩ)
Parts No. 1-215-□□□-11 (36kΩ through 100kΩ)

Value	Parts No. −□□□−
10Ω	509
11	510
12	511
13	512
15	513
16	514
18	515
20	516
22	517
24	518
27	519
30	520
33	521
36	522
39	523
43	524
47	525
51	526
56	527
62	528
68	529
75	530
82	531
91	532

Value	Parts No. −□□□−
100Ω	533
110	534
120	535
130	536
150	537
160	538
180	539
200	540
220	541
240	542
270	543
300	544
330	545
360	546
390	547
430	548
470	549
510	550
560	551
620	552
680	553
750	554
820	555
910	556

Value	Parts No. −□□□−
1.0kΩ	557
1.1	558
1.2	559
1.3	560
1.5	561
1.6	562
1.8	563
2.0	564
2.2	565
2.4	566
2.7	567
3.0	568
3.3	569
3.6	570
3.9	571
4.3	572
4.7	573
5.1	574
5.6	575
6.2	576
6.8	577
7.5	578
8.2	579
9.1	580

Value	Parts No. −□□□−
10kΩ	581
11	582
12	583
13	584
15	585
16	586
18	587
20	588
22	589
24	590
27	591
30	592
33	593

36kΩ	819
39	820
43	821
47	822
51	823
56	824
62	825
68	826
75	827
82	828
91	829
100	830

CHIP RESISTOR

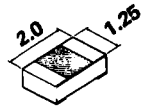

±5% 1/10W
0Ω through 3.3MΩ

Parts No. 1-216-□□□-00

Value	Parts No. – □□□ –
0Ω	295
1Ω	—
1.1	—
1.2	—
1.3	—
1.5	—
1.6	—
1.8	—
2	—
2.2	298
2.4	301
2.7	302
3	303
3.3	304
3.6	305
3.9	306
4.3	307
4.7	308
5.1	297
5.6	309
6.2	310
6.8	311
7.5	312
8.2	313
9.1	314
10Ω	001
11	002
12	003
13	004
15	005
16	006
18	007
20	008
22	009
24	010
27	011

Value	Parts No. – □□□ –
30	012
33Ω	013
36	014
39	015
43	016
47	017
51	018
56	019
62	020
68	021
75	022
82	023
91	024
100Ω	025
110	026
120	027
130	028
150	029
160	030
180	031
200	032
220	033
240	034
270	035
300	036
330	037
360	038
390	039
430	040
470	041
510	042
560	043
620	044
680	045
750	046
820	047

Value	Parts No. – □□□ –
910	048
1kΩ	049
1.1	050
1.2	051
1.3	052
1.5	053
1.6	054
1.8	055
2	056
2.2	057
2.4	058
2.7	059
3	060
3.3	061
3.6	062
3.9	063
4.3	064
4.7	065
5.1	066
5.6	067
6.2	068
6.8	069
7.5	070
8.2	071
9.1	072
10kΩ	073
11	074
12	075
13	076
15	077
16	078
18	079
20	080
22	081
24	082
27	083

Value	Parts No. – □□□ –
30	084
33kΩ	085
36	086
39	087
43	088
47	089
51	090
56	091
62	092
68	093
75	094
82	095
91	096
100kΩ	097
110	098
120	099
130	100
150	101
160	102
180	103
200	104
220	105
240kΩ	106
270	107
300	108
330	109
360	110
390	111
430	112
470	113
510	114
560	115
620	116
680	117
750	118
820	119

Value	Parts No. – □□□ –
910	120
1MΩ	121
1.1	122
1.2	123
1.3	124
1.5	125
1.6	126
1.8	127
2	128
2.2	129
2.4	130
2.7	131
3	132
3.3	133

Ref.No.	Parts No.	SP	Description
AO-2 BOARD			
	1-604-375-00	o	PRINTED CIRCUIT BOARD,AO-2
S1	1-516-963-00	s	LEVER SLIDE "AUDIO MONITOR"
AO-3 BOARD			
	A-6713-106-A	o	MOUNTED CIRCUIT BOARD,AO-3
C1	1-123-322-00	s	ELECT 330 20% 16V
C2	1-123-322-00	s	ELECT 330 20% 16V
C3	1-123-322-00	s	ELECT 330 20% 16V
C5	1-123-318-00	s	ELECT 33 20% 16V
C7	1-123-332-00	s	ELECT 47 20% 25V
C8	1-123-321-00	s	ELECT 220 20% 16V
C12	1-123-322-00	s	ELECT 330 20% 16V
C13	1-123-322-00	s	ELECT 330 20% 16V
C15	1-123-318-00	s	ELECT 33 20% 16V
C17	1-123-332-00	s	ELECT 47 20% 25V
C18	1-123-321-00	s	ELECT 220 20% 16V
C22	1-123-322-00	s	ELECT 330 20% 16V
C23	1-123-322-00	s	ELECT 330 20% 16V
C25	1-123-318-00	s	ELECT 33 20% 16V
C27	1-123-332-00	s	ELECT 47 20% 25V
C28	1-123-321-00	s	ELECT 220 20% 16V
C29	1-123-333-00	s	ELECT 100 20% 25V
C30	1-123-356-00	s	ELECT 10 20% 50V
C51	1-123-322-00	s	ELECT 330 20% 16V
C52	1-123-322-00	s	ELECT 330 20% 16V
C53	1-123-322-00	s	ELECT 330 20% 16V
D1	8-719-200-02	s	10E-2
D2	8-719-200-02	s	10E-2
D3	8-719-200-02	s	10E-2
FL1	1-235-030-00	s	LPF
FL2	1-235-030-00	s	LPF
IC1	8-751-701-13	s	CX170-13(SONY)
IC2	8-751-701-13	s	CX170-13(SONY)
IC3	8-751-701-13	s	CX170-13(SONY)
IC4	8-720-002-97	s	TX429D-7
IC5	8-720-002-97	s	TX429D-7
Q1	8-729-177-32	s	2SD733
Q2	8-729-177-32	s	2SD733
Q3	8-729-177-32	s	2SD733
Q4	8-729-173-37	s	2SA733-P
Q5	8-729-201-04	s	2SC2878
Q6	8-729-173-37	s	2SA733-P
Q7	8-729-201-04	s	2SC2878
Q8	8-729-173-37	s	2SA733-P
Q9	8-729-201-04	s	2SC2878
R1	1-244-861-00	s	CARBON 330 5% 1/2W
RV1	1-224-251-XX	s	VAR,METAL GLAZE 4.7k
RV2	1-224-251-XX	s	VAR,METAL GLAZE 4.7k
RV3	1-224-251-XX	s	VAR,METAL GLAZE 4.7k
T1	1-423-225-00	s	OUTPUT
T2	1-423-225-00	s	OUTPUT
T3	1-423-225-00	s	OUTPUT
AU-62 BOARD			
This board includes the AU-63,DUS-71 and FL-31 board.			
	A-6713-224-A	o	MOUNTED CIRCUIT BOARD,AU-62
C103	1-130-491-00	s	MYLAR 0.047 5% 50V
C104	1-124-186-00	s	ELECT 10 20% 50V
C105	1-107-210-00	s	SILVERD MICA 22PF 5% 500V
C115	1-130-475-00	s	MYLAR 0.0022 5% 50V
C117	1-130-477-00	s	MYLAR 0.0033 5% 50V
C118	1-130-487-00	s	MYLAR 0.022 5% 50V
C119	1-130-491-00	s	MYLAR 0.047 5% 50V
C120	1-107-208-00	s	SILVERD MICA 18PF 5% 500V
C122	1-124-445-00	s	ELECT 100 20% 16V
C123	1-124-445-00	s	ELECT 100 20% 16V
C124	1-130-471-00	s	MYLAR 0.001 5% 50V
C127	1-107-210-00	s	SILVERD MICA 22PF 5% 500V
C129	1-130-491-00	s	MYLAR 0.047 5% 50V
C130	1-130-491-00	s	MYLAR 0.047 5% 50V
C131	1-130-491-00	s	MYLAR 0.047 5% 50V
C133	1-107-210-00	s	SILVERD MICA 22PF 5% 500V
C136	1-162-306-31	s	CERAMIC 0.01 30% 16V
C137	1-162-306-31	s	CERAMIC 0.01 30% 16V
C139	1-124-445-00	s	ELECT 100 20% 16V
C203	1-130-491-00	s	MYLAR 0.047 5% 50V
C204	1-124-186-00	s	ELECT 10 20% 50V
C205	1-107-210-00	s	SILVERD MICA 22PF 5% 500V
C215	1-130-475-00	s	MYLAR 0.0022 5% 50V
C217	1-130-477-00	s	MYLAR 0.0033 5% 50V
C218	1-130-487-00	s	MYLAR 0.022 5% 50V
C219	1-130-491-00	s	MYLAR 0.047 5% 50V
C220	1-107-208-00	s	SILVERD MICA 18PF 5% 500V
C222	1-124-445-00	s	ELECT 100 25% 16V
C223	1-124-445-00	s	ELECT 100 20% 16V
C224	1-130-471-00	s	MYLAR 0.001 5% 50V

Ref.No.	Parts No.	SP	Description
C229	1-130-491-00	s	MYLAR 0.047 5% 50V
C231	1-130-491-00	s	MYLAR 0.047 5% 50V
C233	1-107-210-00	s	SILVERD MICA 22PF 5% 500V
C236	1-162-306-31	s	CERAMIC 0.01 30% 16V
C237	1-162-306-31	s	CERAMIC 0.01 30% 16V
C239	1-124-445-00	s	ELEC 100 20% 16V
C501	1-124-475-11	s	ELECT 470 20% 16V
C504	1-124-475-11	s	ELECT 470 20% 16V
C505	1-124-475-11	s	ELECT 470 20% 16V
C511	1-124-119-00	s	ELECT 330 20% 16V
C512	1-124-475-11	s	ELECT 470 20% 16V
C602	1-162-290-31	s	CERAMIC 470PF 10% 50V
C604	1-162-290-31	s	CERAMIC 470PF 10% 50V
C605	1-127-475-00	s	ELECT 0.22 5% 25V
C606	1-162-290-31	s	CERAMIC 470PF 10% 50V
C608	1-127-475-00	s	ELECT 0.22 5% 25V
C609	1-162-290-31	s	CERAMIC 470PF 10% 50V
C611	1-127-475-00	s	ELECT 0.22 5% 25V
C613	1-127-475-00	s	ELECT 0.22 5% 25V
C617	1-136-164-00	s	MYLAR 0.082 5% 50V
C620	1-136-164-00	s	MYLAR 0.082 5% 50V
C628	1-162-290-31	s	CERAMIC 470PF 10% 50V
CN1	1-564-009-00	o	RECEPTACLE,10P
	1-562-155-11	o	HOUSING,10P
	1-564-026-21	o	CONTACT
CN2	1-564-004-00	o	RECEPTACLE,5P
	1-562-150-11	o	HOUSING,6P
	1-564-026-21	o	CONTACT
CN3	1-564-004-00	o	RECEPTACLE,5P
	1-562-150-11	o	HOUSING,5P
	1-564-026-21	o	CONTACT
CN4	1-564-011-11	o	RECEPTACLE,12P
	1-562-157-11	o	HOUSING,12P
	1-564-026-21	o	CONTACT
CN5	1-564-011-11	o	RECEPTACLE,12P
	1-562-157-11	o	HOUSING,12P
	1-564-026-21	o	CONTACT
D101	8-719-911-19	s	1SS119
D102	8-719-911-19	s	1SS119
D103	8-719-162-07	s	RD6.2E
D104	8-719-162-07	s	RD6.2E
D106	8-719-200-02	s	10E-2
D107	8-719-911-19	s	1SS119
D108	8-719-911-19	s	1SS119
D109	8-719-911-19	s	1SS119
D110	8-719-911-19	s	1SS119
D112	8-719-911-19	s	1SS119
D113	8-719-911-19	s	1SS119
D114	8-719-200-02	s	10E-2
D201	8-719-911-19	s	1SS119
D202	8-719-911-19	s	1SS119
D203	8-719-162-07	s	RD6.2E
D204	8-719-162-07	s	RD6.2E
D207	8-719-911-19	s	1SS119
D208	8-719-911-19	s	1SS119
D209	8-719-911-19	s	1SS119
D210	8-719-911-19	s	1SS119

Ref.No.	Parts No.	SP	Description
D212	8-719-911-19	s	1SS119
D213	8-719-911-19	s	1SS119
D601	8-719-911-19	s	1SS119
D602	8-719-911-19	s	1SS119
D603	8-719-911-19	s	1SS119
D604	8-719-911-19	s	1SS119
D605	8-719-911-19	s	1SS119
D606	8-719-911-19	s	1SS119
D607	8-719-911-19	s	1SS119
D608	8-719-911-19	s	1SS119
D609	8-719-911-19	s	1SS119
D610	8-719-911-19	s	1SS119
D611	8-719-911-19	s	1SS119
IC101	8-759-705-62	s	NJM4562D-D(JRC)
IC102	8-749-925-15	s	AFL25F15000G1(MURATA)
IC103	8-749-925-15	s	AFL25F15000G1(MURATA)
IC104	8-741-115-20	s	BX1152(SONY)
IC105	8-759-705-62	s	NJM4562D-D(JRC)
IC106	8-759-705-62	s	NJM4562D-D(JRC)
IC107	8-759-705-62	s	NJM4562D-D(JRC)
IC201	8-759-705-62	s	NJM4562D-D(JRC)
IC202	8-749-925-15	s	AFL25F15000G1(MURATA)
IC203	8-749-925-15	s	AFL25F15000G1(MURATA)
IC204	8-741-115-20	s	BX1152(SONY)
IC205	8-759-705-62	s	NJM4562D-D(JRC)
IC206	8-759-705-62	s	NJM4562D-D(JRC)
IC502	8-759-178-05	s	uPC78L05(NEC)
IC504	8-759-179-05	s	uPC7905H(NEC)
IC601	8-759-240-71	s	TC4071BP(TOSHIBA)
IC602	8-759-745-61	s	NJM4560D-D(JRC)
IC603	8-759-205-76	s	TC504013BP(TOSHIBA)
IC604	8-759-240-11	s	TC4011BP(TOSHIBA)
IC605	8-759-345-38	s	HD14538BP(HITACHI)
IC606	8-759-240-71	s	TC4071BP(TOSHIBA)
IC607	8-759-345-38	s	HD14538BP(HITACHI)
IC608	8-759-240-01	s	TC4001BP(TOSHIBA)
IC609	8-759-240-11	s	TC4011BP(TOSHIBA)
IC610	8-759-240-11	s	TC4011BP(TOSHIBA)
IC611	8-759-240-71	s	TC4071BP(TOSHIBA)
IC612	8-759-240-11	s	TC4011BP(TOSHIBA)
IC613	8-759-200-01	s	TC4001UBP(TOSHIBA)
IC614	8-759-240-81	s	TC4081BP(TOSHIBA)
IC615	8-759-729-03	s	NJM2903D(JRC)
LV101	1-459-512-00	s	VAR,20mH
LV201	1-459-512-00	s	VAR,20mH
Q101	8-729-201-05	s	2SC2878-B
Q102	8-729-201-05	s	2SC2878-B
Q103	8-729-201-05	s	2SC2878-B
Q104	8-729-201-05	s	2SC2878-B
Q105	8-729-600-27	s	2SC634SP

Ref.No.	Parts No.	SP	Description
Q106	8-729-900-33	s	DTC144EF
Q107	8-729-201-05	s	2SC2878-B
Q108	8-720-002-97	s	TX429D-7
Q109	8-720-002-97	s	TX429D-7
Q110	8-720-002-97	s	TX429D-7
Q111	8-729-173-37	s	2SA733-P
Q112	8-729-201-05	s	2SC2878-B
Q113	8-729-600-27	s	2SC634SP
Q114	8-729-600-27	s	2SC634SP
Q115	8-729-600-27	s	2SC634SP
Q116	8-729-600-27	s	2SC634SP
Q117	8-729-600-27	s	2SC634SP
Q118	8-729-600-27	s	2SC634SP
Q119	8-720-002-97	s	TX429D-7
Q120	8-729-201-05	s	2SC2878-B
Q121	8-729-900-33	s	DTC144EF
Q122	8-729-173-37	s	2SA733-P
Q123	8-729-201-05	s	2SC2878-B
Q201	8-729-201-05	s	2SC2878-B
Q202	8-729-201-05	s	2SC2878-B
Q203	8-729-201-05	s	2SC2878-B
Q204	8-729-201-05	s	2SC2878-B
Q205	8-729-600-27	s	2SC634SP
Q206	8-729-900-33	s	DTC144EF
Q208	8-720-002-97	s	TX429D-7
Q209	8-720-002-97	s	TX429D-7
Q210	8-720-002-97	s	TX429D-7
Q211	8-729-173-37	s	2SA733-P
Q212	8-729-201-05	s	2SC2878-B
Q213	8-729-600-27	s	2SC634SP
Q214	8-729-600-27	s	2SC634SP
Q215	8-729-600-27	s	2SC634SP
Q216	8-729-600-27	s	2SC634SP
Q217	8-729-600-27	s	2SC634SP
Q218	8-729-600-27	s	2SC634SP
Q219	8-720-002-97	s	TX429D-7
Q220	8-729-201-05	s	2SC2878-B
Q221	8-729-900-33	s	DTC144EF
Q222	8-729-173-37	s	2SA733-P
Q223	8-729-201-05	s	2SC2878-B
Q501	8-729-177-32	s	2SD773-3
Q503	8-729-113-32	s	2SB733-3
Q505	8-729-900-33	s	DTC144EF
Q506	8-729-900-33	s	DTC144EF
Q507	8-729-900-30	s	DTA144EF
Q601	8-729-900-33	s	DTC144EF
Q602	8-729-900-33	s	DTC144EF
Q603	8-729-900-33	s	DTC144EF
Q604	8-729-900-30	s	DTA144EF
Q605	8-729-900-33	s	DTC144EF
Q606	8-729-900-30	s	DTA144EF
Q607	8-729-900-33	s	DTC144EF
Q608	8-729-900-30	s	DTA144EF
Q609	8-729-900-33	s	DTC144EF
Q610	8-729-900-30	s	DTA144EF
Q611	8-729-900-33	s	DTC144EF
Q612	8-729-900-30	s	DTA144EF
Q613	8-729-900-33	s	DTC144EF
Q614	8-729-900-30	s	DTA144EF
Q615	8-729-900-33	s	DTC144EF

Ref.No.	Parts No.	SP	Description
Q616	8-729-900-33	s	DTC144EF
Q617	8-729-900-33	s	DTC144EF
Q618	8-729-905-52	s	2SD1055
Q619	8-729-902-12	s	2SC2021
Q620	8-729-902-12	s	2SC2021
Q621	8-729-900-33	s	DTC144EF
Q622	8-729-900-33	s	DTC144EF
R108	1-215-430-00	s	METAL 2.4k 1% 1/6W
R189	1-215-466-00	s	METAL 75k 1% 1/6W
R192	1-215-442-00	s	METAL 7.5k 1% 1/6W
R208	1-215-430-00	s	METAL 2.4k 1% 1/6W
R289	1-215-466-00	s	METAL 75k 1% 1/6W
R623	1-215-485-00	s	METAL 470k 1% 1/6W
R625	1-215-485-00	s	METAL 470k 1% 1/6W
R629	1-215-488-00	s	METAL 620k 1% 1/6W
R631	1-215-488-00	s	METAL 620k 1% 1/6W
R675	1-215-465-00	s	METAL 68k 1% 1/6W
R676	1-215-465-00	s	METAL 68k 1% 1/6W
R677	1-215-445-00	s	METAL 10k 1% 1/6W
R678	1-215-445-00	s	METAL 10k 1% 1/6W
R679	1-215-486-00	s	METAL 510k 1% 1/6W
R680	1-215-486-00	s	METAL 510k 1% 1/6W
R683	1-215-493-00	s	METAL 1M 1% 1/6W
R684	1-215-493-00	s	METAL 1M 1% 1/6W
R685	1-215-445-00	s	METAL 10k 1% 1/6W
R686	1-215-445-00	s	METAL 10k 1% 1/6W
R689	1-215-445-00	s	METAL 10k 1% 1/6W
R691	1-215-445-00	s	METAL 10k 1% 1/6W
RV101	1-228-395-00	s	VAR,METAL GLAZE 10k
RV102	1-228-394-00	s	VAR,METAL GLAZE 4.7k
RV104	1-228-894-00	s	VAR,METAL GLAZE 47k
RV105	1-228-519-00	s	VAR,METAL GLAZE 2.2k
RV107	1-228-394-00	s	VAR,METAL GLAZE 4.7k
RV108	1-228-896-00	s	VAR,METAL GLAZE 220k
RV109	1-228-894-00	s	VAR,METAL GLAZE 47k
RV201	1-228-395-00	s	VAR,METAL GLAZE 10k
RV202	1-228-394-00	s	VAR,METAL GLAZE 4.7k
RV204	1-228-894-00	s	VAR,METAL GLAZE 47k
RV205	1-228-519-00	s	VAR,METAL GLAZE 2.2k
RV208	1-228-896-00	s	VAR,METAL GLAZE 220k
RV209	1-228-894-00	s	VAR,METAL GLAZE 47k
S1	1-516-923-21	s	DIP SLIDE,"DOLBY"
T101	1-427-284-00	s	OUTPUT
T201	1-427-284-00	s	OUTPUT

Ref.No.	Parts No.	SP	Description

AU-63 BOARD

All of the component parts on the AU-63 board are supplied together when you order AU-62 board.

C102	1-123-332-00	s	ELECT 47 20% 25V
C104	1-136-156-00	s	MYLAR 0.018 5% 50V
C105	1-161-466-00	s	CERAMIC 390PF 5% 50V
C106	1-109-048-00	s	MICA 220PF 1% 500V
C109	1-123-332-00	s	ELECT 47 20% 25V
C110	1-109-048-00	s	MICA 220PF 1% 500V
C111	1-130-487-00	s	MYLAR 0.022 5% 50V
C113	1-124-444-00	s	ELECT 220 20% 10V
C115	1-130-495-00	s	MYLAR 0.1 5% 50V
C116	1-136-169-00	s	MYLAR 0.22 5% 50V
C117	1-130-495-00	s	MYLAR 0.1 5% 50V
C118	1-130-498-00	s	MYLAR 0.18 5% 50V
C119	1-136-156-00	s	MYLAR 0.018 5% 50V
C120	1-136-156-00	s	MYLAR 0.018 5% 50V
C121	1-124-186-00	s	ELECT 10 20% 50V
C122	1-130-476-00	s	MYLAR 0.0027 5% 50V
C123	1-130-473-00	s	MYLAR 0.0015 5% 50V
C124	1-130-491-00	s	MYLAR 0.047 5% 50V
C125	1-130-491-00	s	MYLAR 0.047 5% 50V
C126	1-130-483-00	s	MYLAR 0.01 5% 50V
C127	1-124-445-00	s	ELECT 100 20% 16V
C128	1-124-445-00	s	ELECT 100 20% 16V
C133	1-130-484-00	s	MYLAR 0.012 5% 50V
C134	1-102-106-00	s	CERAMIC 100PF 10% 50V
C135	1-102-106-00	s	CERAMIC 100PF 10% 50V
C136	1-102-106-00	s	CERAMIC 100PF 10% 50V
C137	1-102-106-00	s	CERAMIC 100PF 10% 50V
C202	1-123-332-00	s	ELECT 47 20% 25V
C204	1-136-156-00	s	MYLAR 0.018 5% 50V
C205	1-161-466-00	s	CERAMIC 390PF 5% 50V
C206	1-109-048-00	s	MICA 220PF 1% 500V
C209	1-123-332-00	s	ELECT 47 20% 25V
C210	1-109-048-00	s	MICA 220PF 1% 500V
C211	1-130-487-00	s	MYLAR 0.022 5% 50V
C212	1-107-210-00	s	SILVERD MICA 22PF 5% 500V
C213	1-124-444-00	s	ELECT 220 20% 10V
C215	1-130-495-00	s	MYLAR 0.1 5% 50V
C216	1-130-499-00	s	MYLAR 0.22 5% 50V
C217	1-130-495-00	s	MYLAR 0.1 5% 50V
C218	1-130-498-00	s	MYLAR 0.18 5% 50V
C219	1-136-156-00	s	MYLAR 0.018 5% 50V
C220	1-136-156-00	s	MYLAR 0.018 5% 50V
C221	1-124-186-00	s	ELECT 10 20% 50V
C222	1-130-476-00	s	MYLAR 0.0027 5% 50V
C223	1-130-473-00	s	MYLAR 0.0015 5% 50V
C226	1-130-483-00	s	MYLAR 0.01 5% 50V
C233	1-130-484-00	s	MYLAR 0.012 5% 50V
C234	1-102-106-00	s	CERAMIC 100PF 10% 50V
C235	1-102-106-00	s	CERAMIC 100PF 10% 50V
C236	1-102-106-00	s	CERAMIC 100PF 10% 50V
C237	1-102-106-00	s	CERAMIC 100PF 10% 50V
C401	1-129-714-00	s	FILM 0.01 10% 630V
C402	1-123-372-00	s	ELECT 33 20% 50V
C403	1-109-689-00	s	MICA 470PF 1% 500V
C404	1-109-689-00	s	MICA 470PF 1% 500V

Ref.No.	Parts No.	SP	Description
C405	1-130-489-00	s	MYLAR 0.033 5% 50V
C406	1-130-483-00	s	MYLAR 0.01 5% 50V
C407	1-130-483-00	s	MYLAR 0.01 5% 50V
C408	1-123-372-00	s	ELECT 33 20% 50V
C409	1-130-491-00	s	MYLAR 0.047 5% 50V
C412	1-130-483-00	s	MYLAR 0.01 5% 50V
C413	1-123-372-00	s	ELECT 33 20% 50V
C414	1-130-336-00	s	FILM 0.0068 10% 630V
C415	1-109-048-00	s	MICA 220PF 2% 500V
C418	1-130-483-00	s	MYLAR 0.01 5% 50V
C419	1-123-372-00	s	ELECT 33 20% 50V
C420	1-130-336-00	s	FILM 0.0068 10% 630V
C421	1-109-048-00	s	MICA 220PF 2% 500V
C423	1-130-483-00	s	MYLAR 0.01 5% 50V
C424	1-123-372-00	s	ELECT 33 20% 50V
C425	1-130-062-00	s	FILM 0.0056 10% 630V
C427	1-130-483-00	s	MYLAR 0.01 5% 50V
C428	1-123-372-00	s	ELECT 33 20% 50V
C429	1-130-062-00	s	FILM 0.0056 10% 630V
C436	1-130-491-00	s	MYLAR 0.047 5% 50V
C437	1-130-491-00	s	MYLAR 0.047 5% 50V
C438	1-130-493-00	s	MYLAR 0.068 5% 50V
C441	1-130-491-00	s	MYLAR 0.047 5% 50V
C442	1-130-491-00	s	MYLAR 0.047 5% 50V
C443	1-130-493-00	s	MYLAR 0.068 5% 50V
C449	1-124-475-11	s	ELECT 470 20% 16V
C450	1-124-475-11	s	ELECT 470 20% 16V
C452	1-124-475-11	s	ELECT 470 20% 16V
C501	1-124-445-00	s	ELECT 100 20% 16V
C504	1-136-164-00	s	MYLAR 0.082 5% 50V
C505	1-130-498-00	s	MYLAR 0.18 5% 50V
C506	1-136-156-00	s	MYLAR 0.018 5% 50V
C507	1-130-498-00	s	MYLAR 0.18 5% 50V
C604	1-136-164-00	s	MYLAR 0.082 5% 50V
C605	1-130-498-00	s	MYLAR 0.18 5% 50V
C606	1-136-156-00	s	MYLAR 0.018 5% 50V
C607	1-130-498-00	s	MYLAR 0.18 5% 50V
C608	1-161-013-00	s	CERAMIC 0.01 10% 25V
C620	1-127-475-00	s	ELECT 0.22 5% 25V
CN1	1-564-009-00	o	RECEPTACLE,10P
	1-562-155-11	o	HOUSING,10P
	1-564-026-21	o	CONTACT
CN3	1-564-015-00	o	RECEPTACLE,5P
	1-562-150-11	o	HOUSING,5P
	1-564-026-21	o	CONTACT
CN4	1-564-011-11	o	RECEPTACLE,12P
	1-562-157-11	o	HOUSING,12P
	1-564-026-21	o	CONTACT
CN5	1-564-011-11	o	RECEPTACLE,12P
	1-562-157-11	o	HOUSING,12P
	1-564-026-21	o	CONTACT
CN7	1-564-001-11	o	RECEPTACLE,2P
	1-562-147-11	o	HOUSING,2P
	1-564-026-21	o	CONTACT

Ref.No.	Parts No.	SP	Description
CN8	1-564-001-11	o	RECEPTACLE, 2P
	1-562-147-11	o	HOUSING, 2P
	1-564-026-21	o	CONTACT
CN9	1-564-001-11	o	RECEPTACLE, 2P
	1-562-147-11	o	HOUSING, 2P
	1-564-026-21	o	CONTACT
CN10	1-564-001-11	o	RECEPTACLE, 2P
	1-562-147-11	o	HOUSING, 2P
	1-564-026-21	o	CONTACT
CN11	1-564-002-00	o	RECEPTACLE, 3P
	1-564-431-11	o	HOUSING, 3P
	1-564-026-21	o	CONTACT
CN12	1-564-002-00	o	RECEPTACLE, 3P
	1-564-431-11	o	HOUSING, 3P
	1-564-026-21	o	CONTACT
D101	8-719-911-19	s	1SS119
D102	8-719-911-19	s	1SS119
D103	8-719-911-19	s	1SS119
D104	8-719-168-07	s	RD6.8E-B
D106	8-719-200-47	s	10YD4.5B
D201	8-719-911-19	s	1SS119
D202	8-719-911-19	s	1SS119
D203	8-719-911-19	s	1SS119
D204	8-719-168-07	s	RD6.8E-B
D206	8-719-200-47	s	10YD4.5B
D401	8-719-911-19	s	1SS119
D402	8-719-911-19	s	1SS119
D403	8-719-911-19	s	1SS119
D404	8-719-911-19	s	1SS119
D405	8-719-911-19	s	1SS119
D406	8-719-911-19	s	1SS119
D501	8-719-911-19	s	1SS119
D502	8-719-911-19	s	1SS119
D503	8-719-911-19	s	1SS119
D601	8-719-911-19	s	1SS119
D602	8-719-911-19	s	1SS119
IC101	8-759-700-04	s	NJM2043D-D(JRC)
IC102	8-759-705-62	s	NJM4562D-D(JRC)
IC202	8-759-705-62	s	NJM4562D-D(JRC)
IC501	8-759-132-40	s	uPC324C(NEC)
IC502	8-759-969-13	s	SN16913P(TI)
IC503	8-759-969-13	s	SN16913P(TI)
IC601	8-759-132-40	s	uPC324C(NEC)
IC602	8-759-969-13	s	SN16913P(TI)
IC603	8-759-969-13	s	SN16913P(TI)
L401	1-459-155-00	s	45uH
LV101	1-407-305-00	s	VAR, 22mH
LV102	1-407-305-00	s	VAR, 22mH
LV103	1-407-305-00	s	VAR, 22mH
LV104	1-407-307-00	s	VAR, 35mH
LV201	1-407-305-00	s	VAR, 22mH
LV202	1-407-305-00	s	VAR, 22mH
LV203	1-407-305-00	s	VAR, 22mH
LV204	1-407-307-00	s	VAR, 35mH
LV401	1-407-285-00	s	VAR, 1.5mH
LV402	1-407-284-00	s	VAR, 1mH
LV403	1-407-284-00	s	VAR, 1mH
LV404	1-407-284-00	s	VAR, 1mH
LV405	1-407-284-00	s	VAR, 1mH
Q101	8-729-173-37	s	2SA733-P
Q102	8-729-600-27	s	2SC634SP
Q103	8-729-173-37	s	2SA733-P
Q104	8-729-600-27	s	2SC634SP
Q105	8-729-600-27	s	2SC634SP
Q106	8-729-201-05	s	2SC2878-B
Q107	8-729-173-37	s	2SA733-P
Q108	8-729-600-27	s	2SC634SP
Q109	8-729-105-72	s	2SK523-L1
Q110	8-729-600-27	s	2SC634SP
Q111	8-729-240-01	s	2SK240
Q112	8-729-900-65	s	DTA144ES
Q201	8-729-173-37	s	2SA733-P
Q202	8-729-600-27	s	2SC634SP
Q203	8-729-173-37	s	2SA733-P
Q204	8-729-600-27	s	2SC634SP
Q205	8-729-600-27	s	2SC634SP
Q206	8-729-201-05	s	2SC2878-B
Q207	8-729-173-37	s	2SA733-P
Q208	8-729-600-27	s	2SC634SP
Q209	8-729-105-72	s	2SK523-L1
Q210	8-729-600-27	s	2SC634SP
Q211	8-729-240-01	s	2SK240
Q212	8-729-900-65	s	DTA144ES
Q402	8-729-177-43	s	2SD774
Q403	8-729-177-43	s	2SD774
Q404	8-729-177-43	s	2SD774
Q405	8-729-173-37	s	2SA733-P
Q406	8-729-177-43	s	2SD774
Q407	8-729-177-43	s	2SD774
Q408	8-729-173-37	s	2SA733-P
Q409	8-729-900-65	s	DTA144ES
Q410	8-729-177-43	s	2SD774
Q411	8-729-177-43	s	2SD774
Q412	8-729-177-43	s	2SD774
Q413	8-729-900-65	s	DTA144ES
Q414	8-729-177-43	s	2SD774
Q415	8-729-177-43	s	2SD774
Q416	8-729-177-43	s	2SD774
Q417	8-729-900-65	s	DTA144ES
Q418	8-729-177-43	s	2SD774
Q419	8-729-177-43	s	2SD774
Q420	8-729-177-43	s	2SD774
Q421	8-729-900-65	s	DTA144ES
Q422	8-729-177-43	s	2SD774
Q423	8-729-177-43	s	2SD774
Q424	8-729-177-43	s	2SD774
Q429	8-729-173-37	s	2SA733-P
Q430	8-729-201-05	s	2SC2878-B
Q431	8-729-201-05	s	2SC2878-B
Q432	8-729-173-37	s	2SA733-P
Q433	8-729-201-05	s	2SC2878-B
Q434	8-729-201-05	s	2SC2878-B
Q435	8-729-177-43	s	2SD774
Q436	8-729-177-43	s	2SD774

Ref.No.	Parts No.	SP	Description
Q437	8-729-600-27	s	2SC634SP
Q438	8-729-600-27	s	2SC634SP
Q439	8-729-900-89	s	DTC144ES
Q440	8-729-900-89	s	DTC144ES
Q441	8-729-900-89	s	DTC144ES
Q501	8-729-384-48	s	2SA844
Q502	8-729-384-48	s	2SA844
Q503	8-729-900-89	s	DTC144ES
Q601	8-729-384-48	s	2SA844
Q602	8-729-384-48	s	2SA844
Q603	8-729-900-89	s	DTC144ES
Q604	8-729-900-89	s	DTC144ES
Q605	8-729-900-89	s	DTC144ES
Q606	8-729-900-89	s	DTC144ES
R116	1-215-456-00	s	METAL 30k 1% 1/6W
R126	1-215-478-00	s	METAL 240k 1% 1/6W
R128	1-212-706-00	s	METAL 150k 1% 1/2W
R216	1-215-456-00	s	METAL 30k 1% 1/6W
R226	1-215-478-00	s	METAL 240k 1% 1/6W
R228	1-212-706-00	s	METAL 150k 1% 1/2W
R408	1-215-428-00	s	METAL 2k 1% 1/6W
R411	1-247-192-00	s	CARBON 10 5% 1/2W
R426	1-215-418-00	s	METAL 750 1% 1/6W
R429	1-247-192-00	s	CARBON 10 5% 1/2W
R431	1-247-184-00	s	CARBON 2.2 5% 1/2W
R437	1-215-418-00	s	METAL 750 1% 1/6W
R440	1-247-192-00	s	CARBON 10 5% 1/2W
R442	1-247-184-00	s	CARBON 2.2 5% 1/2W
R449	1-247-200-00	s	CARBON 22 5% 1/2W
R450	1-247-192-00	s	CARBON 10 5% 1/2W
R457	1-247-200-00	s	CARBON 22 5% 1/2W
R458	1-247-192-00	s	CARBON 10 5% 1/2W
R513	1-215-428-00	s	METAL 2k 1% 1/6W
R515	1-215-428-00	s	METAL 2k 1% 1/6W
R613	1-215-428-00	s	METAL 2k 1% 1/6W
R615	1-215-428-00	s	METAL 2k 1% 1/6W
RV101	1-228-890-00	s	VAR,METAL GLAZE 4.7k
RV102	1-228-890-00	s	VAR,METAL GLAZE 4.7k
RV103	1-228-890-00	s	VAR,METAL GLAZE 4.7k
RV105	1-228-394-00	s	VAR,METAL GLAZE 4.7k
RV106	1-228-463-00	s	VAR,CERMET 200k
RV201	1-228-890-00	s	VAR,METAL GLAZE 4.7k
RV202	1-228-890-00	s	VAR,METAL GLAZE 4.7k
RV203	1-228-890-00	s	VAR,METAL GLAZE 4.7k
RV205	1-228-394-00	s	VAR,METAL GLAZE 4.7k
RV206	1-228-463-00	s	VAR,CERMET 200k
RV401	1-228-302-00	s	VAR,CERMET 100
RV402	1-228-302-00	s	VAR,CERMET 100
RV403	1-228-759-00	s	VAR,METAL GLAZE 22k
RV404	1-228-759-00	s	VAR,METAL GLAZE 22k
RV501	1-228-888-00	s	VAR,METAL GLAZE 1k
RV502	1-228-892-00	s	VAR,METAL GLAZE 22k
RV601	1-228-888-00	s	VAR,METAL GLAZE 1k
RV603	1-228-896-00	s	VAR,METAL GLAZE 220k

Ref.No.	Parts No.	SP	Description
S1	1-516-923-21	s	"CH-1 HEAD RESPONSE"
S2	1-516-923-21	s	"CH-2 HEAD RESPONSE"
T401	1-433-195-00	s	OSC
T402	1-433-196-00	s	BIAS
T403	1-433-196-00	s	BIAS
T404	1-433-196-00	s	BIAS
T405	1-433-196-00	s	BIAS

AUD-1 BOARD

	A-6711-665-A	o	MOUNTED CIRCUIT BOARD,AUD-1
C1	1-163-031-00	s	CERAMIC CHIP 0.01 50V
C2	1-163-031-00	s	CERAMIC CHIP 0.01 50V
C3	1-163-031-00	s	CERAMIC CHIP 0.01 50V
C4	1-163-031-00	s	CERAMIC CHIP 0.01 50V
C5	1-163-031-00	s	CERAMIC CHIP 0.01 50V
C9	1-163-031-00	s	CERAMIC CHIP 0.01 50V
C12	1-130-483-00	s	MYLAR 0.01 5% 50V
C14	1-163-035-00	s	CERAMIC CHIP 0.047 50V
CN1	1-564-013-00	o	RECEPTACLE,3P
	1-562-148-11	o	HOUSING,3P
	1-564-026-21	o	CONTACT
CN2	1-564-015-00	o	RECEPTACLE,5P
	1-562-150-11	o	HOUSING,5P
	1-564-026-21	o	CONTACT
D1	8-719-100-03	s	1S2835
D2	8-719-100-05	s	1S2837
D3	8-719-812-32	s	TLY123
D2	8-719-100-05	s	1S2837
FL1	1-235-605-11	s	2.18MHz BPF
IC1	8-759-200-60	s	TA7060AP(TOSHIBA)
IC2	8-759-969-13	s	SN16913P(TI)
IC3	8-759-374-58	s	HA17458GS(HITACHI)
IC4	8-759-200-67	s	TC4001BF(TOSHIBA)
IC5	8-759-205-78	s	TC504013BF(TOSHIBA)
L1	1-408-421-00	s	100uH
Q2	8-729-100-66	s	2SC1623
Q3	8-729-100-66	s	2SC1623
Q4	8-729-100-66	s	2SC1623
Q5	8-729-100-66	s	2SC1623
R6	1-215-414-00	s	METAL 510 1% 1/6W

Ref.No.	Parts No.	SP	Description
RV1	1-228-890-00	s	VAR,4700
RV2	1-228-896-00	s	VAR,220k
RV3	1-228-889-00	s	VAR,2200

BC-7 BOARD

All of the component parts on the BC-7 board are supplied together when you order MD-25 board.

	A-6711-591-A	s	MOUNTED CIRCUIT BOARD,BC-7
C501	1-130-477-00	s	MYLAR 0.0033 5% 50V
C502	1-130-471-00	s	MYLAR 0.001 5% 50V
C503	1-130-477-00	s	MYLAR 0.0033 5% 50V
C504	1-130-471-00	s	MYLAR 0.001 5% 50V
C505	1-130-471-00	s	MYLAR 0.001 5% 50V
C506	1-130-471-00	s	MYLAR 0.001 5% 50V
C511	1-163-035-00	s	CERAMIC CHIP 0.0047 50V
C512	1-163-035-00	s	CERAMIC CHIP 0.0047 50V
C530	1-130-471-00	s	MYLAR 0.001 5% 50V
D501	8-719-100-05	s	1S2837
IC501	8-759-200-90	s	TC4538BF(TOSHIBA)
IC502	8-759-200-70	s	TC4015BF(TOSHIBA)
IC503	8-759-200-90	s	TC4538BF(TOSHIBA)
IC504	8-759-205-78	s	TC504013BF(TOSHIBA)
IC505	8-759-200-67	s	TC4001BF(TOSHIBA)
IC506	8-759-200-74	s	TC4023BF(TOSHIBA)
IC507	8-759-200-82	s	TC4069UBF(TOSHIBA)
IC508	8-759-200-68	s	TC4011BF(TOSHIBA)
RV501	1-228-479-00	s	VAR,CERMET 500k
RV502	1-228-479-00	s	VAR,CERMET 500k
RV504	1-228-479-00	s	VAR,CERMET 500k

BC-8 BOARD

All of the component parts on the BC-8 board are supplied together when you order MD-25 board.

	A-6711-592-A	o	MOUNTED CIRCUIT BOARD,BC-8
C531	1-130-477-00	s	MYLAR 0.0033 5% 50V
C533	1-163-035-00	s	CERAMIC CHIP 0.0047 50V
C534	1-163-035-00	s	CERAMIC CHIP 0.0047 50V
C536	1-163-035-00	s	CERAMIC CHIP 0.0047 50V

Ref.No.	Parts No.	SP	Description
IC509	8-759-200-68	s	TC4011BF(TOSHIBA)
IC510	8-759-200-84	s	TC4081BF(TOSHIBA)
IC511	8-759-200-90	s	TC4538BF(TOSHIBA)

CC-9 BOARD

	1-604-429-00	o	PRINTED CIRCUIT BOARD,CC-9

CC-10 BOARD

	1-604-430-00	o	PRINTED CIRCUIT BOARD,CC-10
IC10	8-719-140-05	s	PS4005(NEC)

CC-11 BOARD

	1-604-431-00	o	PRINTED CIRCUIT BOARD,CC-11
IC2	8-719-140-05	s	PS4005(NEC)

CD-29 BOARD

This board includes the NR-8 board.

	A-6711-594-A	o	MOUNTED CIRCUIT BOARD,CD-29
C1	1-124-486-00	s	ELECT 1000 20% 16V
C2	1-124-486-00	s	ELECT 1000 20% 16V
C4	1-107-157-00	s	SILVERD MICA 27PF 5% 500V
C10	1-130-495-00	s	MYLAR 0.1 5% 50V
C11	1-130-495-00	s	MYLAR 0.1 5% 50V
C13	1-130-483-00	s	MYLAR 0.01 5% 50V
C21	1-136-169-00	s	MYLAR 0.22 5% 50V
C31	1-130-483-00	s	MYLAR 0.01 5% 50V
C33	1-130-483-00	s	MYLAR 0.01 5% 50V
C37	1-130-487-00	s	MYLAR 0.022 5% 50V
C41	1-124-144-00	s	ELECT 220 20% 16V
C43	1-130-491-00	s	MYLAR 0.047 5% 50V
C48	1-107-202-00	s	SILVERD MICA 10PF 0.5PF 500V
C49	1-107-042-00	s	SILVERD MICA 2.2PF 0.5PF 500V
C50	1-161-013-00	s	CERAMIC 0.01 10% 25V
C51	1-102-759-00	s	CERAMIC 62PF 5% 50V
C58	1-161-013-00	s	CERAMIC 0.01 10% 25V
C59	1-161-013-00	s	CERAMIC 0.01 10% 25V
C60	1-107-207-00	s	SILVERD MICA 16PF 5% 500V
C63	1-130-483-00	s	MYLAR 0.01 5% 50V

Ref.No.	Parts No.	SP	Description
C64	1-130-478-00	s	MYLAR 0.0039 5% 50V
C66	1-130-481-00	s	MYLAR 0.0068 5% 50V
C75	1-130-478-00	s	MYLAR 0.0039 5% 50V
C83	1-107-236-00	s	SILVERD MICA 560PF 5% 50V
C85	1-124-143-00	s	ELECT 100 20% 16V
C100	1-161-013-00	s	CERAMIC 0.01 10% 25V
C102	1-161-013-00	s	CERAMIC 0.01 10% 25V
C103	1-161-013-00	s	CERAMIC 0.01 10% 25V
C104	1-161-013-00	s	CERAMIC 0.01 10% 25V
C105	1-107-210-00	s	SILVERD MICA 22Pf 5% 500V
C119	1-130-483-00	s	MYLAR 0.01 5% 50V
C123	1-107-158-00	s	SILVERD MICA 30PF 5% 500V
C126	1-130-471-00	s	MYLAR 0.001 5% 50V
C128	1-130-495-00	s	MYLAR 0.1 5% 50V
C133	1-130-480-00	s	MYLAR 0.0056 5% 50V
C134	1-107-206-00	s	SILVERD MICA 15PF 5% 500V
C135	1-124-486-00	s	ELECT 1000 20% 16V
C137	1-130-475-00	s	MYLAR 0.0022 5% 50V
C302	1-130-495-00	s	MYLAR 0.1 5% 50V
C304	1-130-495-00	s	MYLAR 0.1 5% 50V
C305	1-130-495-00	s	MYLAR 0.1 5% 50V
C307	1-130-495-00	s	MYLAR 0.1 5% 50V
C311	1-130-495-00	s	MYLAR 0.1 5% 50V
C313	1-130-495-00	s	MYLAR 0.1 5% 50V
C315	1-130-495-00	s	MYLAR 0.1 5% 50V
C320	1-130-483-00	s	MYLAR 0.01 5% 50V
C321	1-107-159-00	s	SILVERD MICA 33PF 5% 500V
C322	1-124-139-00	s	ELECT 100 20% 10V
C328	1-130-495-00	s	MYLAR 0.1 5% 50V
C329	1-109-559-00	s	MICA 820PF 5% 100V
C330	1-130-495-00	s	MYLAR 0.1 5% 50V
C331	1-109-561-00	s	MICA 0.001 5% 100V
C333	1-107-202-00	s	SILVERD MICA 10PF 5% 500V
C335	1-130-483-00	s	MYLAR 0.01 5% 50V
C504	1-107-202-00	s	SILVERD MICA 10PF 5% 500V
C505	1-124-142-00	s	ELECT 470 20% 10V
C530	1-124-139-00	s	ELECT 100 20% 10V
C538	1-124-139-00	s	ELECT 100 20% 10V
C539	1-107-159-00	s	SILVERD MICA 33PF 5% 500V
C541	1-107-210-00	s	SILVERD MICA 22PF 5% 500V
C542	1-124-139-00	s	ELECT 100 20% 10V
C545	1-124-139-00	s	ELECT 100 20% 10V
D1	8-719-815-55	s	1S1555
D2	8-719-815-55	s	1S1555
D5	8-719-815-55	s	1S1555
D6	8-719-815-55	s	1S1555
D7	8-719-815-55	s	1S1555
D8	8-719-815-55	s	1S1555
D9	8-719-815-55	s	1S1555
D10	8-719-815-59	s	1S1555-S
D11	8-719-815-59	s	1S1555-S
D12	8-719-815-55	s	1S1555
D13	8-719-815-55	s	1S1555
D14	8-719-815-55	s	1S1555
D15	8-719-815-55	s	1S1555
D16	8-719-815-55	s	1S1555
D301	8-719-709-25	s	1S1925-P
D302	8-719-709-25	s	1S1925-P
D501	8-719-101-98	s	1SS97
D502	8-719-101-98	s	1SS97
DL1	1-415-402-11	s	300ns(1.0MHz)
DL2	1-415-402-11	s	300ns(1.0MHz)
DL3	1-415-402-11	s	300ns(1.0MHz)
DL301	1-415-404-11	s	113ns(4.43MHz)
DL302	1-415-402-11	s	300ns(1.0MHz)
FL1	1-235-011-00	s	LPF
FL2	1-235-476-11	s	BPF
FL3	1-231-377-21	s	BPF
FL4	1-235-470-11	s	LPF
FL301	1-235-472-11	s	LPF
IC1	8-749-938-90	s	BX389(SONY)
IC2	8-741-125-80	s	BX1258(SONY)
IC3	8-752-006-00	s	CX20060(SONY)
IC4	8-750-000-46	s	CX872(SONY)
IC5	8-741-125-00	s	BX1250(SONY)
IC6	8-759-014-96	s	MC1496P(MOTOROLA)
IC7	8-752-006-00	s	CX20060(SONY)
IC8	8-741-125-50	s	BX1255(SONY)
IC9	8-759-969-13	s	SN16913P(TI)
IC10	8-752-006-00	s	CX20060(SONY)
IC11	8-759-908-59	s	CX859(SONY)
IC12	8-741-126-40	s	BX1264(SONY)
IC13	8-741-125-10	s	BX1251(SONY)
IC14	8-752-006-00	s	CX20060(SONY)
IC15	8-759-969-13	s	SN16913P(TI)
IC16	8-741-125-20	s	BX1252(SONY)
IC17	8-759-045-38	s	MC14538BCP(MOTOROLA)
IC301	8-749-938-90	s	BX389(SONY)
IC302	8-759-014-95	s	MC1495L(MOTOROLA)
IC303	8-741-125-00	s	BX1250(SONY)
IC305	8-759-200-60	s	TA7060AP(TOSHIBA)
IC306	8-741-125-60	s	BX1256(SONY)
IC307	8-759-200-60	s	TA7060AP(TOSHIBA)
IC503	8-759-200-60	s	TA7060AP(TOSHIBA)
IC504	8-749-938-90	s	BX389(SONY)
IC505	8-759-200-60	s	TA7060AP(TOSHIBA)
IC506	8-743-880-00	s	BX388(SONY)
IC507	8-749-936-61	s	BX366A(SONY)
IC508	8-749-936-61	s	BX366A(SONY)
LV301	1-407-571-00	s	VAR, 22uH
Q3	8-729-201-05	s	2SC2878-B
Q4	8-729-603-50	s	2SC403SP
Q5	8-729-201-05	s	2SC2878-B
Q6	8-729-603-50	s	2SC403SP
Q7	8-729-603-50	s	2SC403SP

Ref.No.	Parts No.	SP	Description
Q8	8-729-600-27	s	2SC634SP
Q9	8-729-603-50	s	2SC403SP
Q10	8-729-603-50	s	2SC403SP
Q11	8-729-603-50	s	2SC403SP
Q12	8-729-600-27	s	2SC634SP
Q13	8-729-600-27	s	2SC634SP
Q14	8-729-600-27	s	2SC634SP
Q15	8-729-603-50	s	2SC403SP
Q16	8-729-201-05	s	2SC2878-B
Q17	8-729-603-50	s	2SC403SP
Q18	8-729-600-27	s	2SC634SP
Q19	8-729-600-27	s	2SC634SP
Q20	8-729-384-48	s	2SA844
Q21	8-729-201-05	s	2SC2878-B
Q22	8-729-201-05	s	2SC2878-B
Q23	8-729-201-05	s	2SC2878-B
Q24	8-729-600-27	s	2SC634SP
Q25	8-729-201-05	s	2SC2878-B
Q26	8-729-603-50	s	2SC403SP
Q27	8-729-603-50	s	2SC403SP
Q28	8-729-603-50	s	2SC403SP
Q29	8-729-600-27	s	2SC634SP
Q30	8-729-113-34	s	2SB733-5
Q31	8-729-600-27	s	2SC634SP
Q32	8-729-201-04	s	2SC2878-B
Q33	8-729-603-50	s	2SC403SP
Q34	8-729-603-50	s	2SC403SP
Q35	8-729-384-48	s	2SA844
Q36	8-729-603-50	s	2SC403SP
Q37	8-729-603-50	s	2SC403SP
Q38	8-729-603-50	s	2SC403SP
Q39	8-729-603-50	s	2SC403SP
Q45	8-729-201-05	s	2SC2878-B
Q301	8-729-603-50	s	2SC403SP
Q302	8-729-603-50	s	2SC403SP
Q303	8-729-603-50	s	2SC403SP
Q304	8-729-603-50	s	2SC403SP
Q305	8-729-612-77	s	2SA1027R
Q306	8-729-612-77	s	2SA1027R
Q307	8-729-603-50	s	2SC403SP
Q308	8-729-603-50	s	2SC403SP
Q309	8-729-201-05	s	2SC2878-B
Q501	8-729-603-50	s	2SC403SP
Q502	8-729-603-50	s	2SC403SP
Q507	8-729-603-50	s	2SC403SP
Q508	8-729-603-50	s	2SC403SP
Q509	8-729-384-48	s	2SA844
Q510	8-729-603-50	s	2SC403SP
Q511	8-729-603-50	s	2SC403SP
Q512	8-729-603-50	s	2SC403SP
RV1	1-228-889-00	s	VAR,METAL GLAZE 2.2k
RV2	1-228-888-00	s	VAR,METAL GLAZE 1k
RV3	1-224-936-00	s	VAR,METAL 500
RV5	1-228-888-00	s	VAR,METAL GLAZE 1k
RV6	1-228-887-00	s	VAR,METAL GLAZE 470

Ref.No.	Parts No.	SP	Description
RV7	1-228-888-00	s	VAR,METAL GLAZE 1k
RV8	1-228-460-00	s	VAR,METAL GLAZE 20k
RV9	1-228-892-00	s	VAR,METAL GLAZE 22k
RV10	1-228-889-00	s	VAR,METAL GLAZE 2.2k
RV11	1-228-890-00	s	VAR,METAL GLAZE 4.7k
RV12	1-224-939-00	s	VAR,METAL 5k
RV13	1-224-940-00	s	VAR,METAL 10k
RV14	1-224-940-00	s	VAR,METAL 10k
RV15	1-224-941-00	s	VAR,METAL 20k
RV16	1-224-940-00	s	VAR,METAL 10k
RV17	1-224-940-00	s	VAR,METAL 10k
RV18	1-224-940-00	s	VAR,METAL 10k
RV19	1-224-941-00	s	VAR,METAL 20k
RV20	1-224-939-00	s	VAR,METAL 5k
RV21	1-228-888-00	s	VAR,METAL GLAZE 1k
RV22	1-224-942-00	s	VAR,METAL 50k
RV23	1-224-943-00	s	VAR,METAL 100k
RV24	1-228-895-00	s	VAR,METAL GLAZE 100k
RV25	1-228-889-00	s	VAR,METAL GLAZE 2.2k
RV28	1-224-940-00	s	VAR,METAL 10k
*RV29	1-224-252-xx (S/N:up to 10390)	s	VAR,METAL GLAZE 10k
*RV29	1-228-890-00 (S/N:10391 and higher)	s	VAR,METAL GLAZE 4.7k
RV301	1-228-887-00	s	VAR,METAL GLAZE 470
RV302	1-224-935-00	s	VAR,METAL 200
RV303	1-228-895-00	s	VAR,METAL GLAZE 100k
RV304	1-228-889-00	s	VAR,METAL GLAZE 2.2k
RV305	1-228-887-00	s	VAR,METAL GLAZE 470
RV306	1-224-938-00	s	VAR,METAL 2k
RV308	1-228-888-00	s	VAR,METAL GLAZE 1k
RV309	1-228-888-00	s	VAR,METAL GLAZE 1k
RV310	1-224-943-00	s	VAR,METAL 100k
RV502	1-228-889-00	s	VAR,METAL GLAZE 2.2k
RV504	1-228-888-00	s	VAR,METAL GLAZE 1k
RV505	1-224-941-00	s	VAR,METAL 20k
RV506	1-224-938-00	s	VAR,METAL 2k
RV507	1-224-937-00	s	VAR,METAL 1k
RV508	1-228-888-00	s	VAR,METAL GLAZE 1k
RV509	1-228-888-00	s	VAR,METAL GLAZE 1k
S301	1-552-509-00	s	DIP "CHROMA ENHANCER"
S501	1-552-509-00	s	DIP "NOISE CANCELLER"
T1	1-425-880-21	s	OSC
TH1	1-800-200-00	s	S-3K
X1	1-527-345-00	s	OSC, 4.43MHz

Ref.No. Parts No. SP Description

CF-9 BOARD

All of the component parts on the CF-9 board are supplied together when you order SV-52A board.

Ref.No.	Parts No.	SP	Description
C501	1-102-114-00	s	CERAMIC 470PF 10% 50V
C502	1-102-110-00	s	CERAMIC 220PF 10% 50V
C503	1-102-110-00	s	CERAMIC 220PF 10% 50V
C504	1-102-114-00	s	CERAMIC 470PF 10% 50V
C505	1-102-114-00	s	CERAMIC 470PF 10% 50V
C506	1-102-114-00	s	CERAMIC 470PF 10% 50V
C507	1-102-114-00	s	CERAMIC 470PF 10% 50V
C508	1-102-114-00	s	CERAMIC 470PF 10% 50V
C509	1-102-114-00	s	CERAMIC 470PF 10% 50V
C510	1-102-114-00	s	CERAMIC 470PF 10% 50V
C511	1-102-114-00	s	CERAMIC 470PF 10% 50V
C512	1-102-114-00	s	CERAMIC 470PF 10% 50V
C515	1-102-114-00	s	CERAMIC 470PF 10% 50V
C516	1-102-114-00	s	CERAMIC 470PF 10% 50V
C518	1-102-114-00	s	CERAMIC 470PF 10% 50V
C522	1-102-114-00	s	CERAMIC 470PF 10% 50V
C523	1-102-114-00	s	CERAMIC 470PF 10% 50V
C525	1-123-332-00	s	ELECT 47 20% 25V
C526	1-123-332-00	s	ELECT 47 20% 25V
C527	1-123-332-00	s	ELECT 47 20% 25V
C540	1-123-356-00	s	ELECT 10 20% 50V
C541	1-123-333-00	s	ELECT 100 20% 25V
C542	1-123-333-00	s	ELECT 100 20% 25V
C543	1-123-330-00	s	ELECT 22 20% 25V
C545	1-123-380-00	s	ELECT 1 20% 100V
C546	1-123-380-00	s	ELECT 1 20% 100V
C702	1-102-114-00	s	CERAMIC 470PF 10% 50V
C709	1-102-110-00	s	CERAMIC 220PF 10% 50V
C716	1-102-114-00	s	CERAMIC 470PF 10% 50V
C717	1-123-381-00	s	ELECT 2.2 20% 100V
C720	1-102-114-00	s	CERAMIC 470PF 10% 50V
C721	1-102-114-00	s	CERAMIC 470PF 10% 50V
C722	1-102-114-00	s	CERAMIC 470PF 10% 50V
D501	8-719-815-55	s	1S1555
D502	8-719-815-55	s	1S1555
D504	8-719-815-55	s	1S1555
D505	8-719-815-55	s	1S1555
D506	8-719-815-55	s	1S1555
D507	8-719-815-55	s	1S1555
D701	8-719-815-55	s	1S1555
D702	8-719-815-55	s	1S1555
IC501	8-759-240-30	s	TC4030BP(TOSHIBA)
IC502	8-759-240-11	s	TC4011BP(TOSHIBA)
IC503	8-759-240-01	s	TC4001BP(TOSHIBA)
IC504	8-759-205-76	s	TC504013BP(TOSHIBA)
IC505	8-759-205-77	s	TC504027BP(TOSHIBA)
IC506	8-759-240-01	s	TC4001BP(TOSHIBA)
IC507	8-759-245-10	s	TC4510BP(TOSHIBA)
IC508	8-759-240-81	s	TC4081BP(TOSHIBA)
IC509	8-759-240-12	s	TC4012BP(TOSHIBA)
IC510	8-759-045-38	s	MC14538BCP(MOTOROLA)
IC511	8-759-240-01	s	TC4001BP(TOSHIBA)
IC512	8-759-240-53	s	TC4053BP(TOSHIBA)
IC513	8-759-240-69	s	TC4069UBP(TOSHIBA)
IC514	8-759-240-11	s	TC4011BP(TOSHIBA)
IC515	8-759-240-53	s	TC4053BP(TOSHIBA)
IC516	8-759-240-69	s	TC4069UBP(TOSHIBA)
IC517	8-759-240-01	s	TC4001BP(TOSHIBA)
IC518	8-759-045-38	s	MC14538BCP(MOTOROLA)
IC519	8-759-240-11	s	TC4011BP(TOSHIBA)
IC520	8-759-240-66	s	TC4066BP(TOSHIBA)
IC521	8-759-045-84	s	MC14584BCP(MOTOROLA)
IC522	8-759-745-50	s	NJM4558D-D(JRC)
IC523	8-749-939-14	s	BX3914(SONY)
IC524	8-759-240-11	s	TC4011BP(TOSHIBA)
IC525	8-759-245-10	s	TC4510BP(TOSHIBA)
IC526	8-759-145-58	s	uPC4558C(NEC)
IC701	8-759-990-82	s	TL082CP(TI)
IC702	8-759-990-82	s	TL082CP(TI)
IC703	8-759-240-81	s	TC4081BP(TOSHIBA)
IC704	8-759-205-76	s	TC504013BP(TOSHIBA)
IC705	8-759-345-38	s	HD14538BP(HITACHI)
IC706	8-759-205-76	s	TC504013BP(TOSHIBA)
IC707	8-759-205-76	s	TC504013BP(TOSHIBA)
IC708	8-759-205-76	s	TC504013BP(TOSHIBA)
IC709	8-759-205-76	s	TC504013BP(TOSHIBA)
IC710	8-759-345-38	s	HD14538BP(HITACHI)
IC711	8-759-240-81	s	TC4081BP(TOSHIBA)
IC712	8-759-240-30	s	TC4030BP(TOSHIBA)
IC713	8-759-240-71	s	TC4071BP(TOSHIBA)
IC714	8-759-345-58	s	HD14538BP(HITACHI)
IC715	8-759-240-15	s	TC4015BP(TOSHIBA)
IC716	8-759-345-38	s	HD14538BP(HITACHI)
IC717	8-759-240-69	s	TC4069UBP(TOSHIBA)
IC718	8-759-240-15	s	TC4015BP(TOSHIBA)
IC719	8-759-345-38	s	HD14538BP(HITACHI)
IC720	8-759-240-73	s	TC4073BP(TOSHIBA)
IC721	8-759-345-38	s	HD14538BP(HITACHI)
IC722	8-759-240-01	s	TC4001BP(TOSHIBA)
IC723	8-759-205-76	s	TC504013BP(TOSHIBA)
IC724	8-759-345-38	s	HD14538BP(HITACHI)
IC725	8-759-205-76	s	TC504013BP(TOSHIBA)
IC726	8-759-240-73	s	TC4073BP(TOSHIBA)
IC727	8-759-240-71	s	TC4071BP(TOSHIBA)
IC728	8-759-240-81	s	TC4081BP(TOSHIBA)
IC729	8-759-205-76	s	TC504013BP(TOSHIBA)
IC730	8-759-205-76	s	TC504013BP(TOSHIBA)
IC731	8-759-240-11	s	TC4011BP(TOSHIBA)
Q501	8-729-600-27	s	2SC634SP
Q502	8-729-600-27	s	2SC634SP
Q503	8-729-600-27	s	2SC634SP
Q504	8-729-600-27	s	2SC634SP
Q505	8-729-600-27	s	2SC634SP

Ref.No.	Parts No.	SP	Description
Q506	8-729-600-27	s	2SC634SP
Q507	8-729-600-27	s	2SC634SP
Q508	8-729-600-27	s	2SC634SP
Q509	8-729-173-37	s	2SA773-P
Q510	8-729-600-27	s	2SC634SP
Q511	8-769-053-47	s	2SC1634-6
Q701	8-769-053-47	s	2SC1634-6
Q702	8-769-053-47	s	2SC1634-6
Q703	8-769-053-47	s	2SC1634-6
Q704	8-769-053-47	s	2SC1634-6
Q705	8-769-053-47	s	2SC1634-6
Q706	8-769-053-47	s	2SC1634-6
Q707	8-769-053-47	s	2SC1634-6
Q709	8-769-053-47	s	2SC1634-6
Q710	8-729-173-37	s	2SA733-P
Q711	8-769-053-47	s	2SC1634-6
RV501	1-224-256-XX	s	METAL GLAZE 220k

CP-92 BOARD

	A-6713-223-A	o	MOUNTED CIRCUIT BOARD,CP-92
C1	1-130-483-00	s	MYLAR 0.01 5% 50V
C2	1-102-106-00	s	CERAMIC 100PF 10% 50V
C3	1-107-210-00	s	SILVERD MICA 22PF 5% 500V
C5	1-124-005-11	s	ELECT 4.7 20% 50V
C6	1-130-491-00	s	MYLAR 0.047 5% 50V
C7	1-130-491-00	s	MYLAR 0.047 5% 50V
C8	1-102-106-00	s	CERAMIC 100PF 10% 50V
C9	1-102-106-00	s	CERAMIC 100PF 10% 50V
C10	1-130-491-00	s	MYLAR 0.047 5% 50V
C11	1-130-491-00	s	MYLAR 0.047 5% 50V
C101	1-130-483-00	s	MYLAR 0.01 5% 50V
C102	1-102-106-00	s	CERAMIC 100PF 10% 50V
C103	1-107-210-00	s	SILVERD MICA 22PF 5% 500V
C105	1-124-005-11	s	ELECT 4.7 20% 50V
D1	8-719-200-46	s	10YD4.5A
D101	8-719-200-46	s	10YD4.5A
IC1	8-759-700-04	s	NJM2043D-D(JRC)
L1	1-407-519-00	s	8uH
L101	1-407-519-00	s	8uH
Q1	8-729-240-01	s	2SK240
Q2	8-729-378-84	s	2SD788
Q3	8-729-373-92	s	2SB739
Q101	8-729-240-01	s	2SK240

Ref.No.	Parts No.	SP	Description
R1	1-215-445-00	s	METAL 10k 1% 1/6W
R2	1-215-432-00	s	METAL 3k 1% 1/6W
R3	1-215-432-00	s	METAL 3k 1% 1/6W
R4	1-215-389-00	s	METAL 47 1% 1/6W
R5	1-215-383-00	s	METAL 27 1% 1/6W
R6	1-215-420-00	s	METAL 910 1% 1/6W
R7	1-215-437-00	s	METAL 4.7k 1% 1/6W
R10	1-215-413-00	s	METAL 470 1% 1/6W
R101	1-215-445-00	s	METAL 10k 1% 1/6W
R102	1-215-432-00	s	METAL 3k 1% 1/6W
R103	1-215-432-00	s	METAL 3k 1% 1/6W
R104	1-215-389-00	s	METAL 47 1% 1/6W
R105	1-215-383-00	s	METAL 27 1% 1/6W
R106	1-215-420-00	s	METAL 910 1% 1/6W
R107	1-215-437-00	s	METAL 4.7k 1% 1/6W
R110	1-215-413-00	s	METAL 470 1% 1/8W
T1	1-423-226-00	s	INPUT
T101	1-423-226-00	s	INPUT

CP-93 BOARD

	1-614-869-11	o	PRINTED CIRCUIT BOARD,CP-93
R1	1-215-438-00	s	METAL 5.1k 1% 1/6W
R2	1-215-399-00	s	METAL 120 1% 1/6W
R3	1-215-404-00	s	METAL 200 1% 1/6W
R4	1-215-443-00	s	METAL 8.2k 1% 1/6W
R5	1-215-438-00	s	METAL 5.1k 1% 1/6W
R6	1-215-423-00	s	METAL 1.2k 1% 1/6W
R7	1-215-423-00	s	METAL 1.2k 1% 1/6W
R101	1-215-438-00	s	METAL 5.1k 1% 1/6W
R102	1-215-399-00	s	METAL 120 1% 1/6W
R103	1-215-404-00	s	METAL 200 1% 1/6W
R104	1-215-443-00	s	METAL 8.2k 1% 1/6W
R105	1-215-438-00	s	METAL 5.1k 1% 1/6W
R106	1-215-423-00	s	METAL 1.2k 1% 1/6W
R107	1-215-423-00	s	METAL 1.2k 1% 1/6W
R201	1-215-394-00	s	METAL 75 1% 1/6W
R202	1-215-394-00	s	METAL 75 1% 1/6W
R203	1-215-394-00	s	METAL 75 1% 1/6W
S1	1-516-783-XX	s	SLIDE "CH-2 LEVEL"
S2	1-516-777-XX	s	SLIDE "600 OHM"
S101	1-516-783-XX	s	SLIDE "CH-1 LEVEL"
S102	1-516-777-XX	s	SLIDE "600 OHM"
S201	1-516-777-XX	s	SLIDE "FRAMING SERVO"
S202	1-516-777-XX	s	SLIDE "75 OHM"
S203	1-516-777-XX	s	SLIDE "SERVO LOCK"

Ref.No. Parts No. SP Description

DP-9 BOARD

All of the component parts on the DP-9 board are supplied together when you order KY-9 board.

	1-604-349-12	o	PRINTED CIRCUIT BOARD,DP-9
D7	8-719-903-21	s	TLR321
D8	8-719-903-21	s	TLR321
D9	8-719-903-21	s	TLR321
D10	8-719-903-21	s	TLR321
S24	1-552-539-00	s	KEY "LAP"
S25	1-552-539-00	s	KEY "RESET"
S26	1-552-539-00	s	KEY "PLAYER"
S27	1-552-539-00	s	KEY "RECORDER"

DR-8 BOARD

All of the component parts on the DR-8 board are supplied together when you order PD-14 board.

	1-604-373-00	o	PRINTED CIRCUIT BOARD,DR-8
Q323	8-729-374-02	s	2SB740
Q324	8-729-114-11	s	2SA1141
Q325	8-729-177-43	s	2SB774
Q326	8-729-168-11	s	2SC2681
R332	1-212-352-00	s	METAL OXIDE 0.22 5% 1W
R333	1-212-352-00	s	METAL OXIDE 0.22 5% 1W

DR-9 BOARD

All of the component parts on the DR-9 board are supplied together when you order PD-14 board.

	1-604-369-00	o	PRINTED CIRCUIT BOARD,DR-9
Q306	8-729-168-11	s	2SC2681
Q307	8-729-311-62	s	2SC1116
Q310	8-729-168-11	s	2SC2681
Q311	8-729-311-62	s	2SC1116

Ref.No. Parts No. SP Description

DUS-71 BOARD

All of the component parts on the DUS-71 board are supplied together when you order AU-62 board.

	1-615-169-11	o	PRINTED CIRCUIT BOARD,DUS-71
	1-564-548-11	o	RECEPTACLE,5P BOARD TO BOARD
LV102	1-407-307-00	s	35mH
LV103	1-407-306-00	s	28mH
LV202	1-407-307-00	s	35mH
LV203	1-407-306-00	s	28mH

EK-2 BOARD

	1-604-354-00	o	PRINTED CIRCUIT BOARD,EK-2
IC1	8-719-104-42	s	PS4005-L(NEC)

EK-3 BOARD

	1-604-355-00	o	PRINTED CIRCUIT BOARD,EK-3
IC1	8-719-104-42	s	PS4005-L(NEC)

EM-1 BOARD

	A-6748-123-B	o	DME ASSY,EM-1

FL-31 BOARD

All of the component parts on the FL-31 board are supplied together when you order AU-62 board.

	1-616-245-11	o	PRINTED CIRCUIT BOARD,FL-31
	1-564-548-11	o	RECEPTACLE,5P BOARD TO BOARD
C701	1-130-484-00	s	MYLAR 0.012 5% 50V
C702	1-130-484-00	s	MYLAR 0.012 5% 50V
C703	1-130-488-00	s	MYLAR 0.027 5% 50V
C704	1-130-489-00	s	MYLAR 0.033 5% 50V
C705	1-130-486-00	s	MYLAR 0.018 5% 50V
C706	1-130-486-00	s	MYLAR 0.018 5% 50V
C801	1-130-484-00	s	MYLAR 0.012 5% 50V
C802	1-130-484-00	s	MYLAR 0.012 5% 50V
C803	1-130-488-00	s	MYLAR 0.027 5% 50V
C804	1-130-489-00	s	MYLAR 0.033 5% 50V

Ref.No.	Parts No.	SP	Description
C805	1-130-486-00	s	MYLAR 0.018 5% 50V
C806	1-130-486-00	s	MYLAR 0.018 5% 50V
CN701	1-564-317-00	o	BOARD TO BOARD 5P
CN801	1-564-317-00	o	BOARD TO BOARD 5P
IC701	8-759-700-84	s	NJM2041M-D(JRC)
IC801	8-759-700-84	s	NJM2041M-D(JRC)
R701	1-215-493-00	s	METAL 1M 1/6W 1%
R702	1-215-493-00	s	METAL 1M 1/6W 1%
R703	1-215-493-00	s	METAL 1M 1/6W 1%
R704	1-215-487-00	s	METAL 560k 1/6W 1%
R705	1-215-485-00	s	METAL 470k 1/6W 1%
R706	1-215-475-00	s	METAL 180k 1/6W 1%
R707	1-215-489-00	s	METAL 680k 1/6W 1%
R801	1-215-493-00	s	METAL 1M 1/6W 1%
R802	1-215-493-00	s	METAL 1M 1/6W 1%
R803	1-215-493-00	s	METAL 1M 1/6W 1%
R804	1-215-487-00	s	METAL 560k 1/6W 1%
R805	1-215-485-00	s	METAL 470k 1/6W 1%
R806	1-215-475-00	s	METAL 180k 1/6W 1%
R807	1-215-489-00	s	METAL 680k 1/6W 1%

FL-36BORD

All of the component parts on the FL-36 board are supplied together when you order YD-17 board.

1-617-304-11 o PRINTED CURCIT BOARD,FL-36 (S/N:10391 and higher)

C1	1-163-035-00	s	CERAMIC CHIP 0.047 50V
C2	1-163-224-00	s	CERAMIC CHIP 7PF 50V
C3	1-163-035-00	s	CERAMIC CHIP 0.047 50V
C4	1-163-035-00	s	CERAMIC CHIP 0.047 50V
C5	1-109-560-00	s	DIP MICA 910PF 5% 100V
FL2	1-235-010-21	s	HPF
Q1	8-729-271-22	s	2SC2712-G
Q2	8-729-271-22	s	2SC2712-G
Q3	8-729-271-22	s	2SC2712-G

FU-16 BOARD

*1-605-936-00 o PRINTED CIRCUIT BOARD,FU-16

1-533-037-XX s HOLDER,FUSE

⚠F5	1-532-325-00	s	TIME-LAG,6,3A
F6	1-532-299-00	s	TIME-LAG,5A
F7	1-532-325-00	s	TIME-LAG,6,3A
F8	1-532-299-00	s	TIME-LAG,5A

Ref.No.	Parts No.	SP	Description

HP-5 BOARD

1-604-378-00 o PRINTED CIRCUIT BOARD,HP-5

CN1	1-507-553-00	s	JACK "HEADPHONES"
RV1	1-228-218-00	s	VAR,CARBON 500/500

KY-9 BOARD

This board includes the DP-9 and KY-14 board.

A-6717-205-A o MOUNTED CIRCUIT BOARD,KY-9

C1	1-123-822-00	s	ELEC 47 20% 10V
C2	1-124-143-00	s	ELECT 100 20% 16V
C3	1-102-108-00	s	CERAMIC 150PF 10% 50V
C4	1-102-119-00	s	CERAMIC 0.0015 10% 50V
C6	1-102-114-00	s	CERAMIC 470PF 10% 50V
C7	1-102-112-00	s	CERAMIC 330PF 10% 50V
C11	1-102-114-00	s	CERAMIC 470PF 10% 50V
C12	1-102-114-00	s	CERAMIC 470PF 10% 50V
C13	1-102-113-00	s	CERAMIC 390PF 10% 50V
C14	1-102-114-00	s	CERAMIC 470PF 10% 50V
C25	1-102-110-00	s	CERAMIC 220PF 10% 50V
CN4	1-560-454-31	o	RECEPTACLE,40P
CN5	1-560-538-00	o	RECEPTACLE,6P
D1	8-719-911-19	s	1SS119
D2	8-719-904-55	s	GL-5HD5 "PLAYER"
D3	8-719-904-55	s	GL-5HD5 "RECORDER"
D4	8-719-904-55	s	GL-5HD5 "SEARCH"
D5	8-719-904-55	s	GL-5HD5 "JOG"
D6	8-719-904-55	s	GL-5HD5 "STILL"
IC1	8-759-900-05	s	SN74LS05N(TI)
IC2	8-759-171-05	s	uPC7805H(NEC)
IC3	8-759-645-17	s	M54517P(MITSUBISHI)
IC4	8-759-240-99	s	TC4099BP(TOSHIBA)
IC5	8-759-245-12	s	TC4512BP(TOSHIBA)
IC6	8-759-245-12	s	TC4512BP(TOSHIBA)
IC7	8-759-241-61	s	TC40161BP(TOSHIBA)
IC8	8-759-045-84	s	MC14584BCP(MOTOROLA)
IC9	8-759-245-12	s	TC4512BP(TOSHIBA)
IC10	8-759-240-15	s	TC4015BP(TOSHIBA)
IC11	8-759-245-12	s	TC4512BP(TOSHIBA)
IC12	8-759-245-16	s	TC4516BP(TOSHIBA)
IC13	8-759-245-28	s	TC4528BP(TOSHIBA)
IC14	8-759-985-01	s	MB84001B(FUJITSU)
IC15	8-759-205-76	s	TC504013BP(TOSHIBA)
IC16	8-759-205-76	s	TC504013BP(TOSHIBA)
IC17	8-759-240-11	s	TC4011BP(TOSHIBA)
IC18	8-759-240-11	s	TC4011BP(TOSHIBA)
IC19	8-759-045-84	s	MC14584BCP(MOTOROLA)
IC20	8-759-240-30	s	TC4030BP(TOSHIBA)

Ref.No.	Parts No.	SP	Description
IC21	8-759-240-30	s	TC4030BP(TOSHIBA)
IC22	8-759-245-12	s	TC4512BP(TOSHIBA)
IC23	8-759-240-99	s	TC4099BP(TOSHIBA)
IC24	8-759-645-17	s	M54517P(MITSUBISHI)
IC25	8-759-240-99	s	TC4099BP(TOSHIBA)
IC26	8-759-245-12	s	TC4512BP(TOSHIBA)
IC27	8-759-645-17	s	M54517P(MITSUBISHI)
IC28	8-759-645-17	s	M54517P(MITSUBISHI)
IC29	8-759-901-56	s	SN74LS156N(TI)
IC31	8-759-100-64	s	uPA64H(NEC)
IC32	8-759-100-54	s	uPA54H(NEC)
IC33	8-759-100-54	s	uPA54H(NEC)
IC34	8-759-100-64	s	uPA64H(NEC)
PL1	1-518-386-00	s	5V,30mA "SERVO LOCK"
PL2	1-518-386-00	s	5V,30mA "REV"
PL3	1-518-386-00	s	5V,30mA "FWD"
Q1	8-729-374-02	s	2SB740
Q2	8-729-374-02	s	2SB740
Q3	8-729-374-02	s	2SB740
Q4	8-729-374-02	s	2SB740
Q5	8-729-374-02	s	2SB740
Q6	8-729-374-02	s	2SB740
Q7	8-729-374-02	s	2SB740
Q8	8-729-374-02	s	2SB740
R1	1-212-502-00	s	METAL 51 1% 1/2W
R2	1-212-502-00	s	METAL 51 1% 1/2W
R3	1-212-502-00	s	METAL 51 1% 1/2W
R4	1-212-502-00	s	METAL 51 1% 1/2W
R15	1-214-100-00	s	METAL 47 1% 1/4W
R16	1-214-100-00	s	METAL 47 1% 1/4W
R17	1-214-100-00	s	METAL 47 1% 1/4W
R18	1-214-100-00	s	METAL 47 1% 1/4W
R19	1-214-100-00	s	METAL 47 1% 1/4W
R20	1-214-100-00	s	METAL 47 1% 1/4W
R21	1-214-100-00	s	METAL 47 1% 1/4W
R26	1-214-108-00	s	METAL 100 1% 1/4W
R35	1-214-119-00	s	METAL 300 1% 1/4W
R36	1-214-119-00	s	METAL 300 1% 1/4W
R37	1-214-119-00	s	METAL 300 1% 1/4W
R38	1-214-119-00	s	METAL 300 1% 1/4W
R39	1-214-108-00	s	METAL 100 1% 1/4W
R40	1-214-119-00	s	METAL 300 1% 1/4W
R41	1-214-108-00	s	METAL 100 1% 1/4W
R42	1-212-502-00	s	METAL 51 1% 1/2W
R43	1-212-502-00	s	METAL 51 1% 1/2W
R44	1-212-502-00	s	METAL 51 1% 1/2W
R45	1-212-502-00	s	METAL 51 1% 1/2W
R46	1-212-502-00	s	METAL 51 1% 1/2W
R47	1-212-502-00	s	METAL 51 1% 1/2W
R48	1-212-502-00	s	METAL 51 1% 1/2W
R49	1-212-502-00	s	METAL 51 1% 1/2W
R50	1-212-502-00	s	METAL 51 1% 1/2W
R51	1-212-502-00	s	METAL 51 1% 1/2W
R52	1-212-502-00	s	METAL 51 1% 1/2W
R53	1-212-502-00	s	METAL 51 1% 1/2W
R54	1-212-502-00	s	METAL 51 1% 1/2W
R55	1-212-502-00	s	METAL 51 1% 1/2W
R56	1-212-502-00	s	METAL 51 1% 1/2W

Ref.No.	Parts No.	SP	Description
S1	1-554-318-11	s	PUSH(12 CORNER) "ASSEMBLE"
	1-518-450-31	s	PILOT LAMP 5V 60mA
	3-706-480-01	s	KEY TOP (WHITE)
S2	1-554-318-11	s	PUSH(12 CORNER) "VIDEO INS"
	1-518-450-31	s	PILOT LAMP 5V 60mA
	3-706-480-01	s	KEY TOP (WHITE)
S3	1-554-318-11	s	PUSH(12 CORNER) "AUDIO 1 INS"
	1-518-450-31	s	PILOT LAMP 5V 60mA
	3-706-480-01	s	KEY TOP (WHITE)
S4	1-554-318-11	s	PUSH(12 CORNER) "AUDIO 2 INS"
	1-518-450-31	s	PILOT LAMP 5V 60mA
	3-706-480-01	s	KEY TOP (WHITE)
S5	1-554-318-11	s	PUSH(12 CORNER) "PREROLL"
	1-518-450-31	s	PILOT LAMP 5V 60mA
	3-706-480-01	s	KEY TOP (WHITE)
S6	1-554-318-11	s	PUSH(12 CORNER) "PREVIEW"
	1-518-450-31	s	PILOT LAMP 5V 60mA
	3-706-480-01	s	KEY TOP (WHITE)
S7	1-554-318-21	s	PUSH(12 CORNER) "AUDIO EDIT"
	1-518-450-31	s	PILOT LAMP 5V 60mA
	3-706-480-11	s	KEY TOP (RED)
S8	1-554-318-21	s	PUSH(12 CORNER) "REVIEW"
	1-518-450-31	s	PILOT LAMP 5V 60mA
	3-706-480-01	s	KEY TOP (WHITE)
S9	1-554-318-21	s	PUSH(12 CORNER) "IN"
	1-518-450-31	s	PILOT LAMP 5V 60mA
	3-706-480-01	s	KEY TOP (WHITE)
S10	1-554-318-21	s	PUSH(12 CORNER) "OUT"
	1-518-450-31	s	PILOT LAMP 5V 60mA
	3-706-480-01	s	KEY TOP (WHITE)
S11	1-554-318-21	s	PUSH(12 CORNER) "STANDBY"
	1-518-450-31	s	PILOT LAMP 5V 60mA
	3-706-480-01	s	KEY TOP (WHITE)
S12	1-553-551-21	s	PUSH(17 CORNER) "REC"
	1-518-450-21	s	PILOT LAMP 5V 60mA
	3-706-481-11	s	KEY TOP(RED)
S13	1-554-318-11	s	PUSH(12 CORNER) "EDIT"
	1-518-450-31	s	PILOT LAMP 5V 60mA
	3-706-480-01	s	KEY TOP (WHITE)
S14	1-554-318-31	s	PUSH(12 CORNER) "EJECT"
	1-518-450-31	s	PILOT LAMP 5V 60mA
	3-706-480-21	s	KEY TOP (BLUE)
S15	1-553-551-11	s	PUSH(17 CORNER) "REW"
	1-518-450-21	s	PILOT LAMP 5V 60mA
	3-706-480-01	s	KEY TOP (WHITE)
S16	1-553-551-11	s	PUSH(17 CORNER) "PLAY"
	1-518-450-21	s	PILOT LAMP 5V 60mA
	3-706-480-01	s	KEY TOP (WHITE)
S17	1-553-551-11	s	PUSH(17 CORNER) "FF"
	1-518-450-21	s	PILOT LAMP 5V 60mA
	3-706-480-01	s	KEY TOP (WHITE)
S18	1-553-551-32	s	PUSH(17 CORNER) "STOP"
	1-518-450-21	s	PILOT LAMP 5V 60mA
	3-706-481-22	s	KEY TOP
S19	1-554-318-11	s	"SEARCH"
S20	1-516-994-00	s	LEVER SLIDE "VIDEO PB/EE - PB"

Ref.No.	Parts No.	SP	Description
KY-14 BOARD			
	All of the component parts on the KY-14 board are supplied together when you order KY-9 board.		
	1-604-347-00	o	PRINTED CIRCUIT BOARD,KY-14
S21	1-552-539-00	s	KEY "TRIM -"
S22	1-552-539-00	s	KEY "TRIM +"
S23	1-552-539-00	s	KEY "ENTERY"
LE-4 BOARD			
	See FRAME		
LMP-1 BOARD			
	1-614-831-11	o	PRINTED CIRCUIT BOARD,LMP-1
PL1	1-518-259-00	s	5V,60mA "FRAMING"
PL2	1-518-259-00	s	5V,60mA "TIMECODE"
PL3	1-518-259-00	s	5V,60mA "AUTO OFF"
PL4	1-518-259-00	s	5V,60mA "DOLBY"
PL5	1-518-259-00	s	5V,60mA "SP"
LP-33 BOARD			
	1-615-161-11	o	PRINTED CIRCUIT BOARD,LP-33
C101	1-124-143-00	s	ELECT 100 20% 16V
C102	1-124-143-00	s	ELECT 100 20% 16V
C201	1-124-143-00	s	ELECT 100 20% 16V
C202	1-124-143-00	s	ELECT 100 20% 16V
IC101	8-759-705-62	s	NJM4562D-D(JRC)
IC201	8-759-705-62	s	NJM4562D-D(JRC)
LV-1 BOARD			
	1-604-371-00	o	PRINTED CIRCUIT BOARD,LV-1
S1	1-516-994-00	s	LEVER SLIDE "VIDEO LEVEL"

Ref.No.	Parts No.	SP	Description
MB-9 BOARD			
	A-6728-238-A	o	MOUNTED CIRCUIT BOARD,MB-9
CN51	1-561-654-00	o	RECEPTACLE, 86P
CN52	1-561-654-00	o	RECEPTACLE, 86P
CN53	1-555-700-00	o	WIRE ASSY,FLAT 34P
CN54	1-560-547-00	o	RECEPTACLE, 40P
MB-18-1 BOARD			
	1-614-862-11	o	PRINTED CIRCUIT BOARD,MB-18
CN111	1-561-654-00	o	RECEPTACLE, 86P
CN112	1-561-654-00	o	RECEPTACLE, 86P
CN113	1-561-654-00	o	RECEPTACLE, 86P
CN114	1-561-654-00	o	RECEPTACLE, 86P
CN115	1-561-654-00	o	RECEPTACLE, 86P
CN116	1-561-654-00	o	RECEPTACLE, 86P
CN117	1-561-654-00	o	RECEPTACLE, 86P
CN142	1-564-773-11	o	RECEPTACLE, 40P
MD-25 BOARD			
	This board includes BC-7,BC-8 and YC-19 board.		
	A-6711-590-A	o	MOUNTED CIRCUIT BOARD,MD-25
C2	1-124-486-00	s	ELECT 1000 20% 16V
C4	1-124-443-00	s	ELECT 100 20% 10V
C5	1-124-443-00	s	ELECT 100 20% 10V
C6	1-124-443-00	s	ELECT 100 20% 10V
C7	1-124-443-00	s	ELECT 100 20% 10V
C11	1-109-559-00	s	MICA 820PF 5% 100V
C12	1-124-443-00	s	ELECT 100 20% 10V
C15	1-124-135-00	s	ELECT 470 20% 6.3V
C16	1-130-483-00	s	MYLAR 0.01 5% 50V
C18	1-124-443-00	s	ELECT 100 20% 10V
C19	1-130-491-00	s	MYLAR 0.047 5% 50V
C20	1-130-473-00	s	MYLAR 0.0015 5% 50V
C27	1-107-207-00	s	SILVERD MICA 16PF 5% 500V
C30	1-124-486-00	s	ELECT 1000 20% 16V
C32	1-124-486-00	s	ELECT 1000 20% 16V
C35	1-136-169-00	s	MYLAR 0.22 5% 50V
C38	1-124-443-00	s	ELECT 100 20% 16V
C40	1-124-118-00	s	ELECT 220 20% 16V
C45	1-107-049-00	s	SILVERD MICA 8.2PF 0.5PF 500V
C46	1-107-211-00	s	SILVERD MICA 24PF 5% 500V
C52	1-107-158-00	s	SILVERD MICA 30PF 5% 500V
C53	1-107-158-00	s	SILVERD MICA 30PF 5% 500V
C57	1-130-475-00	s	MYLAR 0.0022 5% 50V
C58	1-161-013-00	s	CERAMIC 0.01 10% 25V
C59	1-161-013-00	s	CERAMIC 0.01 10% 25V

Ref.No.	Parts No.	SP	Description
C62	1-161-013-00	s	CERAMIC 0.01 10% 25V
C63	1-161-013-00	s	CERAMIC 0.01 10% 25V
C65	1-161-013-00	s	CERAMIC 0.01 10% 25V
C67	1-107-158-00	s	SILVERD MICA 30PF 5% 500V
C201	1-161-013-00	s	CERAMIC 0.01 10% 25V
C208	1-161-013-00	s	CERAMIC 0.01 10% 25V
C210	1-161-013-00	s	CERAMIC 0.01 10% 25V
C213	1-107-208-00	s	SILVERD MICA 18PF 5% 500V
C214	1-124-444-00	s	ELECT 220 20% 6.3V
C216	1-109-159-11	s	MICA 360PF 5% 300V
C217	1-109-159-11	s	MICA 360PF 5% 300V
C218	1-130-471-00	s	MYLAR 0.001 5% 50V
C220	1-130-491-00	s	MYLAR 0.0047 5% 50V
C222	1-130-487-00	s	MYLAR 0.022 5% 50V
C223	1-130-487-00	s	MYLAR 0.022 5% 50V
C227	1-102-759-00	s	CERAMIC 62PF 5% 50V
C229	1-107-211-00	s	SILVERD MICA 24PF 5% 500V
C234	1-124-486-00	s	ELECT 1000 20% 16V
C235	1-130-479-00	s	MYLAR 0.0047 5% 50V
C236	1-130-481-00	s	MYLAR 0.0068 5% 50V
C237	1-130-478-00	s	MYLAR 0.0039 5% 50V
C240	1-130-481-00	s	MYLAR 0.0068 5% 50V
C242	1-130-471-00	s	MYLAR 0.001 5% 50V
C246	1-124-486-00	s	ELECT 1000 20% 16V
C250	1-161-013-00	s	CERAMIC 0.01 10% 25V
C251	1-124-443-00	s	ELECT 100 20% 10V
C254	1-161-013-00	s	CERAMIC 0.01 10% 25V
C255	1-161-013-00	s	CERAMIC 0.01 10% 25V
C263	1-130-495-00	s	MYLAR 0.1 5% 50V
C264	1-130-495-00	s	NYLAR 0.1 5% 50V
C266	1-130-495-00	s	MYLAR 0.1 5% 50V
C270	1-130-474-00	s	MYLAR 0.0018 5% 50V
C273	1-161-013-00	s	CERAMIC 0.01 10% 25V
C274	1-124-443-00	s	ELECT 100 20% 10V
C275	1-130-471-00	s	MYLAR 0.001 5% 50V
C276	1-130-495-00	s	MYLAR 0.1 5% 50V
C279	1-130-487-00	s	MYLAR 0.022 5% 50V
C285	1-109-555-00	s	MICA 560PF 5% 100V
C302	1-109-689-00	s	MICA 470PF 1% 500V
C303	1-107-205-00	s	SILVERD MICA 13PF 5% 500V
C305	1-130-487-00	s	MYLAR 0.022 5% 50V
C306	1-109-687-00	s	MICA 390PF 1% 500V
C311	1-107-202-00	s	SILVERD MICA 10PF 5% 500V
C502	1-161-013-00	s	CERAMIC 0.01 10% 25V
CN501	1-560-906-00	o	RECEPTACLE,10P
	1-509-989-00	o	HOUSING,10P
	1-509-982-00	o	CONTACT
CN502	1-560-906-00	o	RECEPTACLE,10P
	1-509-989-00	o	HOUSING,10P
	1-509-982-00	o	CONTACT
CN503	1-560-906-00	o	RECEPTACLE,10P
	1-509-989-00	o	HOUSING,10P
	1-509-982-00	o	CONTACT
CN504	1-560-906-00	o	RECEPTACLE,10P
	1-509-989-00	o	HOUSING,10P
	1-509-982-00	o	CONTACT

Ref.No.	Parts No.	SP	Description
D1	8-719-911-19	s	1SS119
D2	8-719-911-19	s	1SS119
D3	8-719-911-19	s	1SS119
D4	8-719-911-19	s	1SS119
D5	8-719-709-25	s	1S1925-P
D6	8-719-709-25	s	1S1925-P
D7	8-719-911-19	s	1SS119
D8	8-719-911-19	s	1SS119
D10	8-719-911-19	s	1SS119
D11	8-719-911-19	s	1SS119
D12	8-719-911-19	s	1SS119
D13	8-719-911-19	s	1SS119
D14	8-719-911-19	s	1SS119
D201	8-719-911-19	s	1SS119
D202	8-719-911-19	s	1SS119
D203	8-719-915-43	s	FC54M
D204	8-719-911-19	s	1SS119
D301	8-719-911-19	s	1SS119
D302	8-719-143-07	s	RD4.3E-B
D303	8-719-911-19	s	1SS119
DL1	1-415-403-11	s	0,1µs ~~1000ns(0.1MHz)~~
DL201	1-415-402-11	s	300ns(1.0MHz)
FL2	1-235-009-21	s	HPF
FL3	1-235-477-11	s	HPF
FL201	1-231-377-21	s	BPF
FL202	1-235-471-11	s	LPF
IC1	8-752-006-00	s	CX20060(SONY)
IC2	8-751-310-10	s	CX131A(SONY)
IC3	8-759-200-60	s	TA7060AP(TOSHIBA)
IC4	8-759-200-60	s	TA7060AP(TOSHIBA)
IC5	8-741-125-70	s	BX1257(SONY)
IC6	8-752-006-00	s	CX20060(SONY)
IC201	8-751-880-00	s	CX188(SONY)
IC202	8-741-126-20	s	BX1262(SONY)
IC203	8-752-006-00	s	CX20060(SONY)
IC204	8-759-908-59	s	CX859(SONY)
IC205	8-752-006-00	s	CX20060(SONY)
IC206	8-741-124-70	s	BX1247(SONY)
IC207	8-759-145-58	s	uPC4558C(NEC)
IC501	8-741-124-60	s	BX1246(SONY)
LV201	1-407-572-00	s	33uH
LV301	1-407-566-00	s	3.3uH
Q1	8-729-603-50	s	2SC403SP
Q2	8-729-603-50	s	2SC403SP
Q3	8-729-603-50	s	2SC403SP
Q4	8-729-201-05	s	2SC2878-B
Q5	8-729-603-50	s	2SC403SP

Ref.No.	Parts No.	SP	Description
Q6	8-729-603-50	s	2SC403SP
Q7	8-729-201-05	s	2SC2878-B
Q8	8-729-603-50	s	2SC403SP
Q9	8-729-603-50	s	2SC403SP
Q16	8-729-603-50	s	2SC403SP
Q17	8-729-603-50	s	2SC403SP
Q18	8-729-603-50	s	2SC403SP
Q19	8-729-612-77	s	2SA1027R
Q20	8-729-603-50	s	2SC403SP
Q21	8-729-603-50	s	2SC403SP
Q22	8-729-612-77	s	2SA1027R
Q24	8-729-600-27	s	2SC634SP
Q201	8-729-600-27	s	2SC634SP
Q202	8-729-603-50	s	2SC403SP
Q203	8-729-603-50	s	2SC403SP
Q204	8-729-612-77	s	2SA1027R
Q205	8-729-603-50	s	2SC403SP
Q206	8-729-600-27	s	2SC634SP
Q207	8-729-603-50	s	2SC403SP
Q208	8-729-603-50	s	2SC403SP
Q209	8-729-603-50	s	2SC403SP
Q210	8-729-600-27	s	2SC634SP
Q211	8-729-201-05	s	2SC2878-B
Q212	8-729-201-05	s	2SC2878-B
Q214	8-729-612-77	s	2SA1027R
Q301	8-729-603-50	s	2SC403SP
Q302	8-729-603-50	s	2SC403SP
Q303	8-729-603-50	s	2SC403SP
Q304	8-729-603-50	s	2SC403SP
Q305	8-729-603-50	s	2SC403SP
Q306	8-729-603-50	s	2SC403SP
Q307	8-729-603-50	s	2SC403SP
Q308	8-729-603-50	s	2SC403SP
Q311	8-729-201-05	s	2SC2878-B
Q312	8-729-384-48	s	2SA844
Q313	8-729-201-05	s	2SC2878-B
Q314	8-729-603-50	s	2SC403SP
Q315	8-729-384-48	s	2SA844
Q316	8-729-201-05	s	2SC2878-B
Q501	8-729-113-32	s	2SB733
Q502	8-729-600-27	s	2SC634SP
R2	1-215-394-00	s	METAL 75 1% 1/6W
R4	1-215-416-00	s	METAL 620 1% 1/6W
R12	1-215-448-00	s	METAL 13k 1% 1/6W
R13	1-215-442-00	s	METAL 7.5k 1% 1/6W
R22	1-215-442-00	s	METAL 7.5k 1% 1/6W
R27	1-215-408-00	s	METAL 300 1% 1/6W
R28	1-215-408-00	s	METAL 300 1% 1/6W
R36	1-215-452-00	s	METAL 20k 1% 1/6W
R39	1-215-452-00	s	METAL 20k 1% 1/6W
R40	1-215-425-00	s	METAL 1.5k 1% 1/6W
R41	1-215-417-00	s	METAL 680 1% 1/6W
R43	1-215-425-00	s	METAL 1.5k 1% 1/6W
R57	1-215-429-00	s	METAL 2.2k 1% 1/6W
R84	1-215-414-00	s	METAL 510 1% 1/6W
R85	1-215-414-00	s	METAL 510 1% 1/6W

Ref.No.	Parts No.	SP	Description
R88	1-215-406-00	s	METAL 240 1% 1/6W
R94	1-215-396-00	s	METAL 91 1% 1/6W
R113	1-215-488-00	s	METAL 620k 1% 1/6W
R201	1-215-414-00	s	METAL 510 1% 1/6W
R204	1-215-474-00	s	METAL 160k 1% 1/6W
R209	1-215-439-00	s	METAL 5.6k 1% 1/6W
R213	1-215-432-00	s	METAL 3k 1% 1/6W
R232	1-215-428-00	s	METAL 2k 1% 1/6W
R249	1-215-420-00	s	METAL 910 1% 1/6W
R260	1-215-408-00	s	METAL 300 1% 1/6W
R283	1-215-436-00	s	METAL 4.3k 1% 1/6W
R293	1-215-426-00	s	METAL 1.6k 1% 1/6W
R304	1-215-418-00	s	METAL 750 1% 1/6W
R308	1-215-424-00	s	METAL 1.3k 1% 1/6W
R309	1-215-408-00	s	METAL 300 1% 1/6W
R312	1-215-424-00	s	METAL 1.3k 1% 1/6W
R507	1-215-452-00	s	METAL 20k 1% 1/6W
RV1	1-224-938-00	s	VAR,METAL 2k
RV5	1-224-939-00	s	VAR,METAL 5k
RV6	1-224-939-00	s	VAR,METAL 5k
RV7	1-224-937-00	s	VAR,METAL 1k
RV8	1-228-894-00	s	VAR,METAL GLAZE 47k
RV9	1-228-888-00	s	VAR,METAL GLAZE 1k
RV201	1-224-942-00	s	VAR,METAL 50k
RV202	1-224-937-00	s	VAR,METAL 1k
RV203	1-224-939-00	s	VAR,METAL 5k
RV204	1-228-890-00	s	VAR,METAL GLAZE 4.7k
RV205	1-224-939-00	s	VAR,METAL 5k
RV206	1-228-897-00	s	VAR,METAL GLAZE 470k
RV207	1-228-888-00	s	VAR,METAL GLAZE 1k
RV208	1-228-890-00	s	VAR,METAL GLAZE 4.7k
RV301	1-224-939-00	s	VAR,METAL 5k
RV302	1-228-299-00	s	VAR,METAL 500k
RV303	1-224-938-00	s	VAR,METAL 2k
RV304	1-224-943-00	s	VAR,METAL 100k
RV501	1-228-894-00	s	VAR,METAL GLAZE 47k
RV502	1-228-889-00	s	VAR,METAL GLAZE 2.2k
S1	1-552-509-00	s	DIP "SMEAR COMPENSATE"
T201	1-425-880-21	s	BURST AMP
TH1	1-800-200-00	s	S-3K
X201	1-527-231-00	s	OSC, 4.43MHz

Ref.No.	Parts No.	SP	Description
MS-5 BOARD			
	1-604-368-00	o	PRINTED CIRCUIT BOARD,MS-5
D1	8-719-200-02	s	10E-2(MS-5(D))
S1	1-516-994-00	s	LEVER SLIDE MS-5(A) "AUDIO LIMITER" MS-5(D) "DUB/LINE" MS-5(E) "LOCAL/REMOTE"
	1-516-995-00	s	LEVER SLIDE MS-5(B) "MIXING SELECT" MS-5(C) "MODE SELECT"
NR-8 BOARD			
All of the component parts on the NR-8 board are supplied together when you order CD-29 board.			
	A-6711-595-A	o	MOUNTED CIRCUIT BOARD,NR-8
C3	1-107-049-00	s	SILVERD MICA 8.2PF 0.5PF 500V
C4	1-107-202-00	s	SILVERD MICA 10PF 5% 500V
C5	1-124-442-00	s	ELECT 330 20% 6.3V
C11	1-163-035-00	s	CERAMIC CHIP 0.047 50V
CN1	1-560-906-00	o	RECEPTACLE,10P
	1-509-989-00	o	HOUSING,10P
	1-509-982-00	o	CONTACT
D1	8-719-127-07	s	RD2.7E
D2	8-719-709-25	s	1S1925-P
D3	8-719-709-25	s	1S1925-P
IC1	8-759-200-60	s	TA7060AP(TOSHIBA)
Q1	8-729-271-22	s	2SC2712-G
Q2	8-729-271-22	s	2SC2712-G
Q3	8-729-271-22	s	2SC2712-G
Q4	8-729-271-22	s	2SC2712-G
Q5	8-729-216-22	s	2SA1162-G
Q6	8-729-271-22	s	2SC2712-G
Q7	8-729-271-22	s	2SC2712-G
RV1	1-228-308-00	s	VAR,CERMET 10k

Ref.No.	Parts No.	SP	Description
PC-7 BOARD			
	1-604-348-00	o	PRINTED CIRCUIT BOARD,PC-7
IC1	8-719-104-42	s	PS4005-L
PC-8 BOARD			
	A-6742-046-A	o	MOUNTED CIRCUIT BOARD,PC-8
D1	8-719-902-89	s	EBR5104S-10
Q1	8-729-810-22	s	SPS102
PC-9 BOARD			
	1-604-351-00	o	PRINTED CIRCUIT BOARD,PC-9
IC1	8-759-133-90	s	uPC339C(NEC)
IC2	8-719-104-42	s	PS4005-L(NEC)
IC3	8-719-104-42	s	PS4005-L(NEC)
IC4	8-719-104-42	s	PS4005-L(NEC)
PC-12 BOARD			
	A-6742-047-A	o	MOUNTED CIRCUIT BOARD,PC-12
D1	8-719-902-89	s	EBR5104S-10
Q1	8-729-810-22	s	SPS102
PC-14 BOARD			
	1-604-353-00	o	PRINTED CIRCUIT BOARD,PC-14
IC1	8-719-104-42	s	PS4005-L(NEC)

Ref.No.	Parts No.	SP	Description
PD-14 BOARD			
This board includes the DR-8,DR-9,PD-15,PD-17 and PD-21 board.			
	A-6723-158-C	o	MOUNTED CIRCUIT BOARD,PD-14
	1-560-035-00	s	RECEPTACLE,5P BOARD TO BOARD
C301	1-123-332-00	s	ELECT 47 20% 25V
C302	1-123-333-00	s	ELECT 100 20% 25V
C304	1-123-321-00	s	ELECT 220 20% 16V
C307	1-123-379-00	s	ELECT 0.47 20% 50V
C308	1-123-332-00	s	ELECT 47 20% 25V
C311	1-101-003-00	s	CERAMIC 0.0047 50V
C312	1-101-003-00	s	CERAMIC 0.0047 50V
C313	1-101-004-00	s	CERAMIC 0.01 50V
C314	1-101-004-00	s	CERAMIC 0.01 50V
C317	1-101-003-00	s	CERAMIC 0.0047 50V
C318	1-101-003-00	s	CERAMIC 0.0047 50V
C319	1-101-004-00	s	CERAMIC 0.01 50V
C320	1-101-004-00	s	CERAMIC 0.01 50V
C321	1-161-025-00	s	CERAMIC 0.1 50V
C322	1-161-025-00	s	CERAMIC 0.1 50V
C323	1-123-356-00	s	ELECT 10 20% 16V
C327	1-123-332-00	s	ELECT 47 20% 25V
C330	1-123-332-00	s	ELECT 47 20% 25V
C331	1-123-332-00	s	ELECT 47 20% 25V
C332	1-109-587-00	s	MICA 0.001 5% 500V
C354	1-123-356-00	s	ELECT 10 20% 25V
C360	1-123-332-00	s	ELECT 47 20% 25V
C361	1-123-333-00	s	ELECT 100 20% 25V
C363	1-123-321-00	s	ELECT 220 20% 16V
CP301	1-464-139-00	s	UNIT,BIAS OSCILLATOR
D301	8-719-151-07	s	RD5.1E-B
D302	8-719-911-55	s	U05G
D303	8-719-815-55	s	1S1555
D304	8-719-815-55	s	1S1555
D305	8-719-112-88	s	RD12F-B
D306	8-719-130-07	s	RD3.3E-B
D311	8-719-200-02	s	10E-2
D312	8-719-101-86	s	RD13EL2
D313	8-719-101-86	s	RD13EL2
D314	8-719-200-02	s	10E-2
IC301	8-759-145-58	s	uPC4558C(NEC)
IC304	8-759-145-58	s	uPC4558C(NEC)
IC305	8-759-645-17	s	M54517P(MITSUBISHI)
L301	1-407-198-XX	s	2.2mH

Ref.No.	Parts No.	SP	Description
Q304	8-729-177-44	s	2SD774-5
Q305	8-729-103-43	s	2SB734
Q308	8-729-177-44	s	2SD774-5
Q309	8-729-103-43	s	2SB734
Q312	8-769-192-00	s	2SK43-2
Q313	8-729-177-43	s	2SD774
Q314	8-729-374-02	s	2SB740
Q315	8-729-331-53	s	2SC2315
Q316	8-729-663-47	s	2SC1364
Q317	8-729-377-12	s	2SA771
Q320	8-729-374-02	s	2SB740
Q321	8-729-201-05	s	2SC2878-B
Q322	8-729-663-47	s	2SC1364
Q330	8-729-663-47	s	2SC1364
Q331	8-729-374-02	s	2SB740
Q332	8-729-612-77	s	2SA1027R
Q333	8-729-612-77	s	2SA1027R
Q334	8-729-663-47	s	2SC1364
Q335	8-729-663-47	s	2SC1364
Q336	8-729-374-02	s	2SB740
Q337	8-729-663-47	s	2SC1364
R311	1-207-619-00	s	WIREWOUND 0.82 10% 3W
R326	1-212-397-00	s	METAL OXIDE 10 10% 1W
R328	1-213-131-00	s	METAL OXIDE 100 5% 1W
R372	1-247-180-00	s	CARBON 1 5% 1/2W
R373	1-244-844-00	s	CARBON 62 5% 1/2W
RV1	1-224-249-XX	s	VAR,METAL GLAZE 1k
RV2	1-224-249-XX	s	VAR,METAL GLAZE 1k
PD-15 BOARD			
All of the component parts on the PD-15 board are supplied together when you order PD-14 board.			
	1-604-361-00	o	PRINTED CIRCUIT BOARD,PD-15
Q301	8-729-374-72	s	2SA747
Q302	8-729-374-72	s	2SA747

Ref.No.	Parts No.	SP	Description
PD-17 BOARD			
All of the component parts on the PD-17 board are supplied together when you order PD-14 board.			
	1-604-362-00	o	PRINTED CIRCUIT BOARD,PD-17
Q318	8-729-168-11	s	2SC2681
Q319	8-729-168-11	s	2SC2681
R334	1-217-465-00	s	FUSIBLE 0.47 10% 1W
PD-21 BOARD			
All of the component parts on the PD-21 board are supplied together when you order PD-14 board.			
	1-608-010-00	o	PRINTED CIRCUIT BOARD,PD-21
IC303	8-759-797-12	s	uA7912UC(FSC)
PR-33 BOARD			
	1-604-511-00	o	PRINTED CIRCUIT BOARD,PR-33
S1	1-516-994-00	s	LEVER SLIDE "REMOTE SELECT"
PW-50 BOARD			
	1-604-363-17	o	PRINTED CIRCUIT BOARD,PW-50
⚠ C1	1-130-160-00	s	MYLAR 0.22 20% 250V
C2	1-161-744-00	s	CERAMIC 0.01 400V
C3	1-161-741-00	s	CERAMIC 0.001 10% 400V
C4	1-161-741-00	s	CERAMIC 0.001 10% 400V
C5	1-161-741-00	s	CERAMIC 0.001 10% 400V
⚠ C6	1-161-741-00	s	CERAMIC 0.001 10% 400V
C9	1-161-953-00	s	CERAMIC 0.0047 20% 400V
C10	1-161-953-00	s	CERAMIC 0.0047 20% 400V
C11	1-161-953-00	s	CERAMIC 0.0047 20% 400V
C12	1-161-953-00	s	CERAMIC 0.0047 20% 400V
C13	1-161-744-00	s	CERAMIC 0.01 400V
C15	1-123-381-00	s	ELECT 2.2 20% 50V

Ref.No.	Parts No.	SP	Description
⚠ CN151	1-560-033-00	o	RECEPTACLE,3P
	1-561-218-11	o	HOUSING,3P
	1-561-254-11	o	CONTACT
CN152	1-560-033-00	o	RECEPTACLE,3P
	1-561-218-11	o	HOUSING,3P
	1-561-254-11	o	CONTACT
CN154	1-560-034-00	o	RECEPTACLE,6P
	1-561-219-11	o	HOUSING,6P
	1-561-254-11	o	CONTACT
D1	8-719-911-55	s	U05G
D2	8-719-911-55	s	U05G
D3	8-719-911-55	s	U05G
D4	8-719-911-55	s	U05G
D5	8-719-200-02	s	10E-2
D6	8-719-815-55	s	1S1555
⚠ F1	1-532-350-00	s	TIME-LAG, 4A
F2	1-532-634-00	s	TEMPERATURE, 10A
⚠ FH1	1-533-037-XX	s	FUSE HOLDER
FH2	1-533-037-XX	s	FUSE HOLDER
PH1	1-519-244-00	s	NEON PHOTO COUPLER
Q1	8-729-600-27	s	2SC634SP
Q2	8-729-177-44	s	2SD774-5
⚠ R1	1-217-632-00	s	WIREWOUND 10 10% 10W
R3	1-244-929-00	s	CARBON 220k 5% 1/2W
R4	1-244-929-00	s	CARBON 220k 5% 1/2W
R5	1-247-276-00	s	CARBON 33k 5% 1/2W
R11	1-247-266-00	s	CARBON 12k 5% 1/2W
R12	1-244-917-00	s	CARBON 68k 5% 1/2W
R13	1-244-919-00	s	CARBON 82k 5% 1/2W
⚠ RY1	1-515-493-00	s	12V,75mA
⚠ T1	1-421-457-00	s	LINE FILTER

Ref.No.	Parts No.	SP	Description
PW-79 BOARD			
This board inciudes the FU-16 board.			
⚠	1-413-071-23	o	SWICHING REGULATOR
⚠	1-604-555-00	o	PRINTED CIRCUIT BOARD,PW-79
⚠ C2	1-161-742-00	o	CERAMIC 2200PF 20% 400V
C3	1-161-742-00	o	CERAMIC 2200PF 20% 400V
C5	1-130-141-00	s	MYLAR 0.01 20% 630V
C8	1-108-239-00	s	MYLAR 0.01 10% 50V
C10	1-108-234-00	s	MYLAR 0.0047 10% 50V
C14	1-130-356-00	s	MYLAR 0.47 10% 250V
C15	1-130-356-00	s	MYLAR 0.47 10% 250V
⚠ C32	1-161-742-00	o	CERAMIC 2200PF 20% 400V
C33	1-161-742-00	o	CERAMIC 2200PF 20% 400V
C36	1-108-239-00	s	MYLAR 0.01 10% 50V
D1	1-806-262-51	s	CTU-26S
D4	8-719-815-87	s	1S1587
D5	8-719-815-87	s	1S1587
D6	8-719-815-87	s	1S1587
D7	8-719-815-87	s	1S1587
D11	8-719-924-06	s	ERC24-06S
D12	8-719-924-06	s	ERC24-06S
D14	8-719-156-07	s	RD5.6E-B
D15	8-719-156-07	s	RD5.6E-B
IC1	8-759-729-03	s	NJM2903D(JRC)
L1	1-421-349-00	s	LINE FILTER
L2	1-421-329-00	s	CHOKE
L3	1-407-161-XX	s	22uH
L11	1-421-329-00	s	CHOKE
L12	1-421-329-00	s	CHOKE
L13	1-421-329-00	s	CHOKE
L14	1-421-329-00	s	CHOKE
L15	1-421-329-00	s	CHOKE
Q1	8-729-965-61	s	2SC2656
Q2	8-729-965-61	s	2SC2656
Q3	8-729-954-21	s	2SC2542
Q4	1-806-094-21	s	2SA1009A
Q5	8-763-623-00	s	2SC1810
Q6	8-729-173-37	s	2SA733-P
Q7	8-729-173-37	s	2SA733-P
Q8	8-729-173-37	s	2SA733-P
Q9	8-729-255-12	s	2SC1890-F
Q10	8-729-965-61	s	2SC2656
Q11	8-729-663-47	s	2SC1364
Q12	8-729-965-61	s	2SC2656

Ref.No.	Parts No.	SP	Description
R1	1-247-099-00	s	NF CARBON 47 5% 1/4W
R2	1-247-105-00	s	NF CARBON 82 5% 1/4W
R3	1-247-103-00	s	NF CARBON 68 5% 1/4W
R4	1-247-113-00	s	NF CARBON 180 5% 1/4W
R5	1-206-698-00	s	METAL 27k 5% 2W
R6	1-206-698-00	s	METAL 27k 5% 2W
R7	1-206-698-00	s	METAL 27k 5% 2W
R8	1-206-698-00	s	METAL 27k 5% 2W
R9	1-214-595-00	s	METAL 100k 5% 1W
R10	1-214-597-00	s	METAL 100k 5% 2W
R11	1-214-595-00	s	METAL 100k 5% 1W
R12	1-211-552-00	s	NF CARBON 2.4k 5% 1/4W
R13	1-247-131-00	s	CARBON 1k 5% 1/4W
R14	1-247-111-00	s	NF CARBON 150 5% 1/4W
R15	1-247-167-00	s	CARBON 33k 5% 1/4W
R16	1-247-113-00	s	NF CARBON 180 5% 1/4W
R17	1-246-527-00	s	CARBON 180k 5% 1/4W
R18	1-247-141-00	s	NF CARBON 2.7k 5% 1/4W
R19	1-247-099-00	s	CARBON 47 5% 1/4W
R20	1-247-169-00	s	CARBON 39k 5% 1/4W
R21	1-247-141-00	s	NF CARBON 2.7k 5% 1/4W
R22	1-247-155-00	s	CARBON 10k 5% 1/4W
R23	1-247-131-00	s	CARBON 1k 5% 1/4W
R24	1-211-935-00	s	NF CARBON 1k 5% 1/4W
⚠R25	1-217-160-00	s	METAL 1 10% 5W
R28	1-247-147-00	s	CARBON 4.7k 5% 1/4W
⚠R29	1-214-595-00	s	METAL 100k 5% 1W
R30	1-214-595-00	s	METAL 100k 5% 1W
R33	1-247-137-00	s	CARBON 1.8k 5% 1/4W
R34	1-247-147-00	s	CARBON 4.7k 5% 1/4W
R35	1-247-147-00	s	CARBON 4.7k 5% 1/4W
R36	1-247-131-00	s	CARBON 1k 5% 1/4W
R37	1-247-236-00	s	CARBON 680 5% 1/2W
R38	1-247-131-00	s	CARBON 1k 5% 1/4W
⚠R44	1-217-158-00	s	METAL 0.47 10% 5W
RV1	1-224-660-00	s	VAR,METAL 1k
RV2	1-224-249-xx	s	VAR,METAL GLAZE 1k
			RT
T1	1-437-148-00	s	DRIVE
T2	1-543-100-00	s	DRIVE
⚠T3	1-447-798-00	s	CONVERTER

Ref.No.	Parts No.	SP	Description
RE-3 BOARD			
	A-6725-227-B	o	MOUNTED CIRCUIT BOARD,RE-3
C1	1-123-332-00	s	ELECT 47 20% 25V
D7	8-719-200-02	s	10E-2
D8	8-719-200-02	s	10E-2
IC1	8-759-729-03	s	NJM2903D(JRC)
IC2	8-759-729-03	s	NJM2903D(JRC)
R3	1-212-526-00	s	METAL 510 1% 1/2W
R4	1-212-533-00	s	METAL 1k 1% 1/2W
R13	1-217-156-00	s	METAL PLATE 0.22
RV2	1-224-247-XX	s	VAR,METAL GLAZE 100
RV3	1-224-247-XX	s	VAR,METAL GLAZE 100
RM-4/RM-35 BOARD			
	*1-604-370-00 (S/N:up to 10390)	o	PRINTED CIRCUIT BOARD,RM-4
	*1-616-865-11 (S/N:10391 and higher)	o	PRINTED CIRCUIT BOARD,RM-35
CN101	1-561-028-00	s	36P "REMOTE 2"
CN102	1-561-655-00	s	9P "REMOTE 1"
CN103	1-564-466-11	o	34P FOR FLAT CABLE
RP-18 BOARD			
	A-6711-597-A	o	MOUNTED CIRCUIT BOARD,RP-18
C1	1-107-048-00	s	MICA 0.5P 500V 6.8P
C2	1-107-048-00	s	MICA 0.5P 500V 6.8P
C7	1-123-332-00	s	ELECT 47 20% 25V
C11	1-123-332-00	s	ELECT 47 20% 25V
C16	1-123-332-00	s	ELECT 47 20% 25V

Ref.No.	Parts No.	SP	Description
C19	1-123-332-00	s	ELECT 47 20% 25V
C25	1-123-332-00	s	ELECT 47 20% 25V
C28	1-123-380-00	s	ELECT 1 20% 50V
C29	1-123-332-00	s	ELECT 47 20% 25V
C33	1-123-332-00	s	ELECT 47 20% 25V
C36	1-123-380-00	s	ELECT 1 20% 100V
C37	1-123-332-00	s	ELECT 47 20% 25V
C51	1-123-321-00	s	ELECT 220 20% 16V
C104	1-109-567-11	s	MICA 270PF 5% 500V
C107	1-109-567-11	s	MICA 270PF 5% 500V
C109	1-123-332-00	s	ELECT 47 20% 25V
C111	1-123-332-00	s	ELECT 47 20% 25V
D1	8-719-815-59	s	1S1555-8
D2	8-719-127-07	s	RD2.7E
D3	8-719-815-55	s	1S1555
D4	8-719-815-55	s	1S1555
D5	8-719-815-55	s	1S1555
D6	8-719-815-55	s	1S1555
D101	8-719-815-55	s	1S1555
D102	8-719-815-55	s	1S1555
D103	8-719-815-55	s	1S1555
D104	8-719-815-55	s	1S1555
IC1	8-743-731-00	s	BX373A(SONY)
IC2	8-759-240-09	s	TC4009UBP(TOSHIBA)
IC3	8-741-136-10	s	BX1361(SONY)
IC4	8-741-136-10	s	BX1361(SONY)
IC5	8-751-300-00	s	CX130(SONY)
IC6	8-751-300-00	s	CX130(SONY)
IC7	8-729-677-14	s	2SC2771
IC8	8-729-677-14	s	2SC2771
Q3	8-729-201-05	s	2SC2878-B
Q6	8-729-201-05	s	2SC2878-B
Q101	8-729-603-50	s	2SC4038P
Q102	8-729-603-50	s	2SC4038P
Q103	8-729-603-50	s	2SC4038P
Q104	8-729-177-32	s	2SD773
Q105	8-729-113-33	s	2SB733-4
Q106	8-729-603-50	s	2SC4038P
Q107	8-729-603-50	s	2SC4038P
Q108	8-729-177-32	s	2SD773
Q109	8-729-113-33	s	2SB733-4
R3	1-215-408-00	s	METAL 300 1% 1/6W
R4	1-215-420-00	s	METAL 910 1% 1/6W
R7	1-215-414-00	s	METAL 510 1% 1/6W
R8	1-215-414-00	s	METAL 510 1% 1/6W
R10	1-215-394-00	s	METAL 75 1% 1/6W
R11	1-215-380-00	s	METAL 20 1% 1/6W
R12	1-215-380-00	s	METAL 20 1% 1/6W
R18	1-215-380-00	s	METAL 20 1% 1/6W
R19	1-215-380-00	s	METAL 20 1% 1/6W

Ref.No.	Parts No.	SP	Description
RV1	1-224-249-XX	s	VAR,METAL GLAZE 1k
RV2	1-224-248-XX	s	VAR,METAL GLAZE 470
RV3	1-224-251-XX	s	VAR,METAL GLAZE 4.7k
RV4	1-224-250-XX	s	VAR,METAL GLAZE 2.2k
RV5	1-224-251-XX	s	VAR,METAL GLAZE 4.7k
RV6	1-224-250-XX	s	VAR,METAL GLAZE 2.2k
RV101	1-224-249-XX	s	VAR,METAL GLAZE 1k
RV102	1-224-249-XX	s	VAR,METAL GLAZE 1k
T1	1-426-017-00	s	AF
T2	1-426-172-11	s	HF
T3	1-426-247-11	s	HIGH FREQUENCY
T4	1-426-172-11	s	HF
T5	1-426-247-11	s	HIGH FREQUENCY

RS-3 BOARD

This board includes the RS-4 board.

	A-6715-148-A	o	MOUNTED CIRCUIT BOARD,RS-3
C1	1-123-332-00	s	ELECT 47 20% 25V
C6	1-102-110-00	s	CERAMIC 220PF 10% 50V
C7	1-161-013-00	s	CERAMIC 0.01 20% 25V
C8	1-108-228-00	s	MYLAR 0.0015 10% 50V
C9	1-161-013-00	s	CERAMIC 0.01 20% 25V
C13	1-102-106-00	s	CERAMIC 100PF 10% 50V
C14	1-123-382-00	s	ELECT 3.3 20% 50V
C15	1-102-106-00	s	CERAMIC 100PF 10% 50V
C17	1-123-332-00	s	ELECT 47 20% 25V
C22	1-102-110-00	s	CERAMIC 220PF 10% 50V
C23	1-161-013-00	s	CERAMIC 0.01 20% 25V
C24	1-106-176-00	s	MYLAR 0.0015 10% 50V
C25	1-161-013-00	s	CERAMIC 0.01 20% 25V
C29	1-102-106-00	s	CERAMIC 100PF 10% 50V
C30	1-123-382-00	s	ELECT 3.3 20% 50V
C31	1-102-106-00	s	CERAMIC 100PF 10% 50V
C33	1-102-114-00	s	CERAMIC 470PF 10% 50V
C35	1-161-013-00	s	CERAMIC 0.01 20% 25V
C39	1-102-106-00	s	CERAMIC 100PF 10% 50V
C40	1-102-106-00	s	CERAMIC 100PF 10% 50V
C41	1-123-306-00	s	ELECT 47 20% 10V
C42	1-102-106-00	s	CERAMIC 100PF 10% 50V
C43	1-123-330-00	s	ELECT 22 20% 25V
C44	1-102-106-00	s	CERAMIC 100PF 10% 50V
C46	1-102-114-00	s	CERAMIC 470PF 10% 50V
C47	1-123-356-00	s	ELECT 10 20% 50V
C48	1-123-356-00	s	ELECT 10 20% 50V
C49	1-123-612-00	s	ELECT 2.2 20% 50V
C50	1-102-106-00	s	CERAMIC 100PF 10% 50V
C52	1-102-106-00	s	CERAMIC 100PF 10% 50V
C53	1-102-106-00	s	CERAMIC 100PF 10% 50V
C54	1-102-106-00	s	CERAMIC 100PF 10% 50V
C56	1-102-106-00	s	CERAMIC 100PF 10% 50V
C57	1-102-106-00	s	CERAMIC 100PF 10% 50V
C58	1-123-356-00	s	ELECT 10 20% 50V

Ref.No.	Parts No.	SP	Description
C59	1-123-356-00	s	ELECT 10 20% 50V
C60	1-123-332-00	s	ELECT 47 20% 25V
C61	1-123-356-00	s	ELECT 10 20% 50V
C62	1-161-032-00	s	CERAMIC 0.01 20% 25V
C63	1-161-032-00	s	CERAMIC 0.01 20% 25V
C64	1-161-032-00	s	CERAMIC 0.01 20% 25V
C65	1-161-032-00	s	CERAMIC 0.01 20% 25V
C66	1-161-032-00	s	CERAMIC 0.01 20% 25V
C67	1-161-032-00	s	CERAMIC 0.01 20% 25V
C68	1-161-032-00	s	CERAMIC 0.01 20% 25V
C69	1-161-032-00	s	CERAMIC 0.01 20% 25V
C70	1-161-032-00	s	CERAMIC 0.01 20% 25V
C71	1-161-032-00	s	CERAMIC 0.01 20% 25V
C72	1-161-032-00	s	CERAMIC 0.01 20% 25V
C73	1-161-032-00	s	CERAMIC 0.01 20% 25V
C74	1-161-032-00	s	CERAMIC 0.01 20% 25V
C75	1-161-032-00	s	CERAMIC 0.01 20% 25V
C76	1-161-032-00	s	CERAMIC 0.01 20% 25V
C77	1-161-032-00	s	CERAMIC 0.01 20% 25V
C78	1-161-032-00	s	CERAMIC 0.01 20% 25V
C79	1-161-032-00	s	CERAMIC 0.01 20% 25V
C80	1-161-032-00	s	CERAMIC 0.01 20% 25V
C81	1-161-032-00	s	CERAMIC 0.01 20% 25V
C82	1-161-032-00	s	CERAMIC 0.01 20% 25V
C83	1-161-032-00	s	CERAMIC 0.01 20% 25V
C84	1-161-032-00	s	CERAMIC 0.01 20% 25V
C85	1-161-032-00	s	CERAMIC 0.01 20% 25V
C86	1-161-032-00	s	CERAMIC 0.01 20% 25V
C87	1-161-032-00	s	CERAMIC 0.01 20% 25V
C88	1-161-032-00	s	CERAMIC 0.01 20% 25V
C89	1-161-032-00	s	CERAMIC 0.01 20% 25V
C90	1-161-032-00	s	CERAMIC 0.01 20% 25V
C91	1-161-032-00	s	CERAMIC 0.01 20% 25V
C95	1-161-032-00	s	CERAMIC 0.01 20% 25V
C96	1-123-356-00	s	ELECT 10 20% 50V
C97	1-123-381-00	s	ELECT 2.2 20% 100V
C98	1-123-356-00	s	ELECT 10 20% 50V
C99	1-123-381-00	s	ELECT 2.2 20% 100V
C100	1-123-330-00	s	ELECT 22 20% 25V
C101	1-102-114-00	s	CERAMIC 470PF 10% 50V
C102	1-123-381-00	s	ELECT 2.2 20% 100V
C104	1-123-333-00	s	ELECT 100 20% 25V
C105	1-123-333-00	s	ELECT 100 20% 25V
D1	8-719-151-07	s	RD5.1E-B
D2	8-719-911-19	s	1SS119
D3	8-719-911-19	s	1SS119
D4	8-719-911-19	s	1SS119
D5	8-719-151-07	s	RD5.1E-B
D6	8-719-911-19	s	1SS119
D7	8-719-911-19	s	1SS119
D8	8-719-911-19	s	1SS119
D9	8-719-911-19	s	1SS119
D10	8-719-911-19	s	1SS119
D11	8-719-911-19	s	1SS119
D12	8-719-911-19	s	1SS119
D13	8-719-911-19	s	1SS119
D14	8-719-911-19	s	1SS119
D15	8-719-911-19	s	1SS119

Ref.No.	Parts No.	SP	Description
D16	8-719-911-19	s	1SS119
D17	8-719-911-19	s	1SS119
D18	8-719-911-19	s	1SS119
D19	8-719-911-19	s	1SS119
D20	8-719-911-19	s	1SS119
D21	8-719-911-19	s	1SS119
D22	8-719-911-19	s	1SS119
D23	8-719-911-19	s	1SS119
D24	8-719-911-19	s	1SS119
D25	8-719-911-19	s	1SS119
D26	8-719-911-19	s	1SS119
D27	8-719-911-19	s	1SS119
D28	8-719-911-19	s	1SS119
D29	8-719-191-07	s	RD9.1E
D30	8-719-911-19	s	1SS119
D31	8-719-911-19	s	1SS119
D32	8-719-911-19	s	1SS119
D33	8-719-911-19	s	1SS119
D34	8-719-911-19	s	1SS119
D35	8-719-911-19	s	1SS119
D36	8-719-911-19	s	1SS119
D37	8-719-175-07	s	RD7.5E
D38	8-719-911-19	s	1SS119
D39	8-719-911-19	s	1SS119
D40	8-719-911-19	s	1SS119
D41	8-719-911-19	s	1SS119
D42	8-719-151-07	s	RD5.1E-B
D43	8-719-911-19	s	1SS119
D44	8-719-911-19	s	1SS119
D45	8-719-911-19	s	1SS119
D46	8-719-911-19	s	1SS119
D47	8-719-911-19	s	1SS119
D48	8-719-911-19	s	1SS119
D49	8-719-911-19	s	1SS119
D50	8-719-911-19	s	1SS119
D51	8-719-911-19	s	1SS119
D52	8-719-911-19	s	1SS119
D53	8-719-911-19	s	1SS119
D54	8-719-911-19	s	1SS119
D55	8-719-911-19	s	1SS119
D56	8-719-911-19	s	1SS119
D57	8-719-911-19	s	1SS119
D58	8-719-911-19	s	1SS119
D59	8-719-911-19	s	1SS119
D60	8-719-911-19	s	1SS119
D61	8-719-911-19	s	1SS119
D62	8-719-911-19	s	1SS119
D63	8-719-911-19	s	1SS119
D64	8-719-911-19	s	1SS119
D65	8-719-911-19	s	1SS119
D66	8-719-911-19	s	1SS119
D67	8-719-911-19	s	1SS119
D68	8-719-911-19	s	1SS119
D69	8-719-911-19	s	1SS119
D70	8-719-911-19	s	1SS119
D71	8-719-911-19	s	1SS119
D72	8-719-911-19	s	1SS119
D73	8-719-911-19	s	1SS119
D74	8-719-911-19	s	1SS119
D75	8-719-911-19	s	1SS119

Ref.No.	Parts No.	SP	Description
IC1	8-759-729-03	s	NJM2903D(JRC)
IC2	8-759-729-03	s	NJM2903D(JRC)
IC3	8-759-984-70	s	MB84070B(FUJITSU)
IC4	8-759-984-70	s	MB84070B(FUJITSU)
IC5	8-759-205-76	s	TC504013BP(TOSHIBA)
IC6	8-759-984-70	s	MB84070B(FUJITSU)
IC7	8-759-240-11	s	TC4011BR(TOSHIBA)
IC8	8-759-618-41	s	M51841P(MITSUBICHI)
IC9	8-759-618-41	s	M51841P(MITSUBICHI)
IC10	8-759-045-38	s	MC14538BCP(MOTOROLA)
IC11	8-759-132-40	s	uPC324C(NEC)
IC12	8-759-618-41	s	M51841P(MITSUBICHI)
IC13	8-759-132-40	s	uPC324C(NEC)
IC14	8-759-240-01	s	TC4001BP(TOSHIBA)
IC15	8-759-240-11	s	TC4011BP(TOSHIBA)
IC16	8-759-240-66	s	TC4066BP(TOSHIBA)
IC17	8-759-132-40	s	uPC324C(NEC)
IC18	8-759-240-66	s	TC4066BP(TOSHIBA)
IC19	8-759-984-69	s	MB84069UB(FUJITSU)
IC20	8-759-984-69	s	MB84069UB(FUJITSU)
IC21	8-759-240-11	s	TC4011BP(TOSHIBA)
IC22	8-759-240-66	s	TC4066BP(TOSHIBA)
IC23	8-759-645-17	s	M54517P(MITSUBISHI)
IC24	8-759-241-61	s	TC40161BP(TOSHIBA)
IC25	8-759-240-XX	s	TC4099BP(TOSHIBA)
IC26	8-759-240-XX	s	TC4099BP(TOSHIBA)
IC27	8-759-240-01	s	TC4001BP(TOSHIBA)
IC28	8-759-984-69	s	MB84069UB(FUJITSU)
IC29	8-759-240-01	s	TC4001BP(TOSHIBA)
IC30	8-759-240-01	s	TC4001BP(TOSHIBA)
IC31	8-759-240-01	s	TC4001BP(TOSHIBA)
IC32	8-759-240-11	s	TC4011BP(TOSHIBA)
IC33	8-759-240-01	s	TC4001BP(TOSHIBA)
IC34	8-759-240-01	s	TC4001BP(TOSHIBA)
IC35	8-759-984-69	s	MB84069UB(FUJITSU)
IC36	8-759-240-11	s	TC4011BP(TOSHIBA)
IC37	8-759-240-01	s	TC4001BP(TOSHIBA)
IC38	8-759-240-11	s	TC4011BP(TOSHIBA)
IC39	8-759-240-01	s	TC4001BP(TOSHIBA)
IC40	8-759-240-01	s	TC4001BP(TOSHIBA)
IC41	8-759-250-67	s	TC5067BP(TOSHIBA)
IC42	8-759-645-19	s	M54519P(MITSUBISHI)
IC43	8-759-250-67	s	TC5067BP(TOSHIBA)
IC44	8-759-645-19	s	M54519P(MITSUBISHI)
IC45	8-759-132-40	s	uPC324C(NEC)
IC46	8-759-132-40	s	uPC324C(NEC)
IC47	8-759-145-58	s	uPC4558C(NEC)
IC48	8-759-240-01	s	TC4001BP(TOSHIBA)
IC49	8-759-240-11	s	TC4011BP(TOSHIBA)
IC50	8-759-240-01	s	TC4001BP(TOSHIBA)
IC51	8-759-045-38	s	MC14538BCP(MOTOROLA)
Q1	8-729-201-05	s	2SC2878-B
Q2	8-729-194-57	s	2SC945-P
Q3	8-729-194-57	s	2SC945-P
Q4	8-729-194-57	s	2SC945-P
Q5	8-729-201-05	s	2SC2878-B

Ref.No.	Parts No.	SP	Description
Q6	8-729-201-05	s	2SC2878-B
Q7	8-729-201-05	s	2SC2878-B
Q8	8-729-201-05	s	2SC2878-B
Q9	8-729-201-05	s	2SC2878-B
Q10	8-729-194-57	s	2SC945-P
Q11	8-729-201-05	s	2SC2878-B
Q12	8-729-201-05	s	2SC2878-B
Q13	8-729-201-05	s	2SC2878-B
Q14	8-729-201-05	s	2SC2878-B
Q15	8-729-201-05	s	2SC2878-B
Q16	8-729-201-05	s	2SC2878-B
Q17	8-729-194-57	s	2SC945-P
Q18	8-729-201-05	s	2SC2878-B
Q19	8-729-194-57	s	2SC945-P
Q20	8-729-194-57	s	2SC945-P
R15	1-214-166-00	s	METAL 27k 1% 1/4W
R42	1-214-166-00	s	METAL 27k 1% 1/4W
R64	1-214-174-00	s	METAL 56k 1% 1/4W
R69	1-214-925-00	s	METAL 330k 1% 1/2W
R70	1-214-173-00	s	METAL 51k 1% 1/4W
R75	1-214-158-00	s	METAL 12k 1% 1/4W
R76	1-214-173-00	s	METAL 51k 1% 1/4W
R80	1-214-169-00	s	METAL 36k 1% 1/4W
R81	1-214-179-00	s	METAL 91k 1% 1/4W
R82	1-214-173-00	s	METAL 51k 1% 1/4W
R83	1-214-156-00	s	METAL 10k 1% 1/4W
R84	1-214-177-00	s	METAL 75k 1% 1/4W
R87	1-214-961-00	s	METAL 750k 1% 1/2W
R88	1-214-177-00	s	METAL 75k 1% 1/4W
R89	1-214-177-00	s	METAL 75k 1% 1/4W
R90	1-214-961-00	s	METAL 750k 1% 1/2W
R97	1-214-149-00	s	METAL 5.1k 1% 1/4W
R98	1-214-149-00	s	METAL 5.1k 1% 1/4W
R159	1-214-156-00	s	METAL 10k 1% 1/4W
R160	1-214-156-00	s	METAL 10k 1% 1/4W
R179	1-214-175-00	s	METAL 62k 1% 1/4W
R180	1-214-156-00	s	METAL 10k 1% 1/4W
R181	1-214-175-00	s	METAL 62k 1% 1/4W
R182	1-214-156-00	s	METAL 10k 1% 1/4W
R187	1-214-156-00	s	METAL 10k 1% 1/4W
R188	1-214-156-00	s	METAL 10k 1% 1/4W
R207	1-214-175-00	s	METAL 62k 1% 1/4W
R208	1-214-156-00	s	METAL 10k 1% 1/4W
R209	1-214-175-00	s	METAL 62k 1% 1/4W
R210	1-214-156-00	s	METAL 10k 1% 1/4W
R222	1-212-526-00	s	METAL 510 1% 1/2W
R223	1-212-526-00	s	METAL 510 1% 1/2W
R270	1-214-162-00	s	METAL 18k 1% 1/4W
R271	1-214-163-00	s	METAL 20k 1% 1/4W
R272	1-214-971-00	s	METAL 2M 1% 1/4W
RV1	1-224-253-XX	s	VAR,METAL GLAZE 22k
RV2	1-224-253-XX	s	VAR,METAL GLAZE 22k

Ref.No.	Parts No.	SP	Description

RS-4 BOARD

All of the component parts on the RS-4 board are supplied together when you order RS-3 board.

C501	1-123-380-00	s	ELECT 1 20% 100V
C502	1-102-106-00	s	CERAMIC 100PF 10% 50V
C503	1-102-106-00	s	CERAMIC 100PF 10% 50V
C504	1-102-106-00	s	CERAMIC 100PF 10% 50V
C505	1-123-382-00	s	ELECT 3.3 20% 50V
C506	1-102-106-00	s	CERAMIC 100PF 10% 50V
C507	1-161-013-00	s	CERAMIC 0.01 20% 25V
C508	1-123-369-00	s	ELECT 4.7 20% 63V
C509	1-123-380-00	s	ELECT 1 20% 100V
C510	1-102-106-00	s	CERAMIC 100PF 10% 50V
C511	1-102-106-00	s	CERAMIC 100PF 10% 50V
C512	1-102-106-00	s	CERAMIC 100PF 10% 50V
C513	1-123-382-00	s	ELECT 3.3 20% 50V
C514	1-102-106-00	s	CERAMIC 100PF 10% 50V
C515	1-161-013-00	s	CERAMIC 0.01 20% 25V
C516	1-123-369-00	s	ELECT 4.7 20% 63V
C517	1-102-106-00	s	CERAMIC 100PF 10% 50V
C518	1-123-332-00	s	ELECT 47 20% 25V
C519	1-102-106-00	s	CERAMIC 100PF 10% 50V
C520	1-123-380-00	s	ELECT 1 20% 100V
C521	1-102-106-00	s	CERAMIC 100PF 10% 50V
C522	1-123-332-00	s	ELECT 47 20% 16V
C523	1-102-106-00	s	CERAMIC 100PF 10% 50V
C524	1-123-380-00	s	ELECT 1 20% 100V
C525	1-123-381-00	s	ELECT 2.2 20% 100V
C526	1-123-380-00	s	ELECT 1 20% 100V
C527	1-123-380-00	s	ELECT 1 20% 100V
C529	1-123-381-00	s	ELECT 2.2 20% 100V
C531	1-102-106-00	s	CERAMIC 100PF 10% 50V
C534	1-102-106-00	s	CERAMIC 100PF 10% 50V
C535	1-123-330-00	s	ELECT 22 20% 25V
C536	1-123-330-00	s	ELECT 22 20% 25V
C540	1-123-381-00	s	ELECT 2.2 20% 100V
C542	1-102-106-00	s	CERAMIC 100PF 10% 50V
C545	1-102-106-00	s	CERAMIC 100PF 10% 50V
C550	1-108-355-00	s	MYLAR 0.0056 10% 50V
C551	1-108-355-00	s	MYLAR 0.0056 10% 50V
C552	1-131-402-00	s	ELECT 0.1 20% 35V
C553	1-123-380-00	s	ELECT 1 20% 100V
C554	1-123-381-00	s	ELECT 2.2 20% 100V
C555	1-123-380-00	s	ELECT 1 20% 100V
C556	1-123-381-00	s	ELECT 2.2 20% 100V
C558	1-123-356-00	s	ELECT 10 20% 50V
C559	1-123-381-00	s	ELECT 2.2 20% 100V
C560	1-123-381-00	s	ELECT 2.2 20% 100V
C561	1-123-356-00	s	ELECT 10 20% 50V
C562	1-123-369-00	s	ELECT 4.7 20% 63V
C563	1-123-381-00	s	ELECT 2.2 20% 100V
C564	1-123-381-00	s	ELECT 2.2 20% 100V
C565	1-123-382-00	s	ELECT 3.3 20% 50V

Ref.No.	Parts No.	SP	Description
C566	1-123-382-00	s	ELECT 3.3 20% 50V
C567	1-123-356-00	s	ELECT 10 20% 50V
C568	1-123-369-00	s	ELECT 4.7 20% 63V
C569	1-123-381-00	s	ELECT 2.2 20% 100V
C570	1-123-332-00	s	ELECT 47 20% 50V
C571	1-161-013-00	s	CERAMIC 0.01 20% 25V
C572	1-161-013-00	s	CERAMIC 0.01 20% 25V
C573	1-161-013-00	s	CERAMIC 0.01 20% 25V
C574	1-161-013-00	s	CERAMIC 0.01 20% 25V
C575	1-161-013-00	s	CERAMIC 0.01 20% 25V
C576	1-161-013-00	s	CERAMIC 0.01 20% 25V
C578	1-161-013-00	s	CERAMIC 0.01 20% 25V
C579	1-161-013-00	s	CERAMIC 0.01 20% 25V
C580	1-161-013-00	s	CERAMIC 0.01 20% 25V
C581	1-161-013-00	s	CERAMIC 0.01 20% 25V
C582	1-161-013-00	s	CERAMIC 0.01 20% 25V
C583	1-161-013-00	s	CERAMIC 0.01 20% 25V
C584	1-161-013-00	s	CERAMIC 0.01 20% 25V
C585	1-161-013-00	s	CERAMIC 0.01 20% 25V
C586	1-161-013-00	s	CERAMIC 0.01 20% 25V
C587	1-161-013-00	s	CERAMIC 0.01 20% 25V
C588	1-161-013-00	s	CERAMIC 0.01 20% 25V
C590	1-161-013-00	s	CERAMIC 0.01 20% 25V
C591	1-161-013-00	s	CERAMIC 0.01 20% 25V
C592	1-161-013-00	s	CERAMIC 0.01 20% 25V
C593	1-161-013-00	s	CERAMIC 0.01 20% 25V
C598	1-102-114-00	s	CERAMIC 470PF 10% 50V
C599	1-123-356-00	s	ELECT 10 20% 50V
C600	1-123-379-00	s	ELECT 0.47 20% 100V
D501	8-719-911-19	s	1SS119
D502	8-719-911-19	s	1SS119
D503	8-719-911-19	s	1SS119
D504	8-719-911-19	s	1SS119
D505	8-719-709-25	s	1S1925-P
D507	8-719-709-25	s	1S1925-P
D509	8-719-911-19	s	1SS119
D510	8-719-911-19	s	1SS119
D511	8-719-911-19	s	1SS119
D512	8-719-911-19	s	1SS119
D513	8-719-911-19	s	1SS119
D514	8-719-911-19	s	1SS119
D515	8-719-911-19	s	1SS119
D516	8-719-911-19	s	1SS119
D517	8-719-911-19	s	1SS119
D519	8-719-911-19	s	1SS119
D520	8-719-911-19	s	1SS119
D521	8-719-911-19	s	1SS119
D522	8-719-911-19	s	1SS119
D523	8-719-911-19	s	1SS119
D524	8-719-911-19	s	1SS119
D525	8-719-911-19	s	1SS119
D526	8-719-911-19	s	1SS119
D527	8-719-911-19	s	1SS119
D528	8-719-911-19	s	1SS119
D529	8-719-911-19	s	1SS119
D530	8-719-911-19	s	1SS119
D531	8-719-911-19	s	1SS119
D532	8-719-911-19	s	1SS119
D533	8-719-911-19	s	1SS119

Ref.No.	Parts No.	SP	Description
D534	8-719-911-19	s	1SS119
D535	8-719-911-19	s	1SS119
D536	8-719-911-19	s	1SS119
D537	8-719-911-19	s	1SS119
D538	8-719-911-19	s	1SS119
D539	8-719-911-19	s	1SS119
D540	8-719-911-19	s	1SS119
D542	8-719-911-19	s	1SS119
D544	8-719-911-19	s	1SS119
D546	8-719-911-19	s	1SS119
D547	8-719-911-19	s	1SS119
D548	8-719-911-19	s	1SS119
D549	8-719-911-19	s	1SS119
IC501	8-759-132-40	s	uPC324C(NEC)
IC502	8-759-132-40	s	uPC324C(NEC)
IC503	8-759-245-16	s	TC4516BP(TOSHIBA)
IC504	8-759-245-16	s	TC4516BP(TOSHIBA)
IC505	8-759-132-40	s	uPC824C(NEC)
IC506	8-759-132-40	s	uPC324C(NEC)
IC507	8-759-245-16	s	TC4516BP(TOSHIBA)
IC508	8-759-245-16	s	TC4516BP(TOSHIBA)
IC509	8-759-240-11	s	TC4011BP(TOSHIBA)
IC510	8-759-240-11	s	TC4011BP(TOSHIBA)
IC511	8-759-240-01	s	TC4001BP(TOSHIBA)
IC512	8-759-240-69	s	TC4069UBP(TOSHIBA)
IC513	8-759-240-66	s	TC4066BP(TOSHIBA)
IC514	8-759-240-66	s	TC4066BP(TOSHIBA)
IC515	8-759-132-40	s	uPC324C(NEC)
IC516	8-759-240-66	s	TC4066BP(TOSHIBA)
IC517	8-759-132-40	s	uPC324C(NEC)
IC518	8-759-240-69	s	TC4069UBP(TOSHIBA)
IC519	8-759-132-40	s	uPC324C(NEC)
IC520	8-759-132-40	s	uPC324C(NEC)
IC521	8-759-240-66	s	TC4066BP(TOSHIBA)
IC522	8-759-240-66	s	TC4066BP(TOSHIBA)
IC523	8-759-132-40	s	uPC324C(NEC)
IC524	8-759-240-66	s	TC4066BP(TOSHIBA)
IC525	8-759-240-66	s	TC4066BP(TOSHIBA)
IC526	8-759-240-01	s	TC4001BP(TOSHIBA)
IC527	8-759-240-11	s	TC4011BP(TOSHIBA)
IC528	8-759-045-38	s	MC14538BCP(MOTOROLA)
IC529	8-759-132-40	s	uPC324C(NEC)
IC530	8-759-240-01	s	TC4001BP(TOSHIBA)
IC531	8-759-240-66	s	TC4066BP(TOSHIBA)
IC532	8-759-240-66	s	TC4066BP(TOSHIBA)
IC533	8-759-240-11	s	TC4011BP(TOSHIBA)
IC534	8-759-240-69	s	TC4069UBP(TOSHIBA)
IC535	8-759-240-01	s	TC4001BP(TOSHIBA)
IC536	8-759-045-38	s	MC14538BCP(MOTOROLA)
IC537	8-759-240-01	s	TC4001BP(TOSHIBA)
IC538	8-759-240-01	s	TC4001BP(TOSHIBA)
IC539	8-759-240-01	s	TC4001BP(TOSHIBA)
IC540	8-759-240-01	s	TC4001BP(TOSHIBA)

Ref.No.	Parts No.	SP	Description
IC541	8-759-132-40	s	uPC324C(NEC)
IC542	8-759-240-11	s	TC4011BP(TOSHIBA)
IC543	8-759-240-01	s	TC4001BP(TOSHIBA)
IC544	8-759-240-69	s	TC4069UBP(TOSHIBA)
IC545	8-759-240-11	s	TC4011BP(TOSHIBA)
IC546	8-759-240-78	s	TC4078BP(TOSHIBA)
Q501	8-729-201-05	s	2SC2878-B
Q502	8-729-201-05	s	2SC2878-B
Q503	8-729-201-05	s	2SC2878-B
Q504	8-729-201-05	s	2SC2878-B
Q507	8-729-663-47	s	2SC1364
R509	1-214-148-00	s	METAL 4.7k 1% 1/4W
R510	1-214-152-00	s	METAL 6.8k 1% 1/4W
R511	1-214-180-00	s	METAL 100k 1% 1/4W
R512	1-214-180-00	s	METAL 100k 1% 1/4W
R513	1-212-708-00	s	METAL 180k 1% 1/2W
R514	1-212-708-00	s	METAL 180k 1% 1/2W
R515	1-214-142-00	s	METAL 2.7k 1% 1/4W
R517	1-214-162-00	s	METAL 18k 1% 1/4W
R518	1-214-168-00	s	METAL 33k 1% 1/4W
R520	1-214-180-00	s	METAL 100k 1% 1/4W
R528	1-214-180-00	s	METAL 100k 1% 1/4W
R547	1-214-148-00	s	METAL 4.7k 1% 1/4W
R548	1-214-152-00	s	METAL 6.8k 1% 1/4W
R549	1-214-180-00	s	METAL 100k 1% 1/4W
R550	1-214-180-00	s	METAL 100k 1% 1/4W
R551	1-212-708-00	s	METAL 180k 1% 1/2W
R552	1-212-708-00	s	METAL 180k 1% 1/2W
R553	1-214-142-00	s	METAL 2.7k 1% 1/4W
R555	1-214-162-00	s	METAL 18k 1% 1/4W
R556	1-214-168-00	s	METAL 33k 1% 1/4W
R558	1-214-180-00	s	METAL 100k 1% 1/4W
R566	1-214-180-00	s	METAL 100k 1% 1/4W
R587	1-214-152-00	s	METAL 6.8k 1% 1/4W
R589	1-212-707-00	s	METAL 150k 1% 1/2W
R603	1-214-152-00	s	METAL 6.8k 1% 1/4W
R605	1-212-707-00	s	METAL 150k 1% 1/2W
R620	1-212-715-00	s	METAL 360k 1% 1/2W
R621	1-214-166-00	s	METAL 27k 1% 1/4W
R622	1-212-715-00	s	METAL 360k 1% 1/2W
R623	1-214-166-00	s	METAL 27k 1% 1/4W
R624	1-212-712-00	s	METAL 270k 1% 1/2W
R625	1-214-180-00	s	METAL 100k 1% 1/4W
R626	1-214-158-00	s	METAL 12k 1% 1/4W
R634	1-214-180-00	s	METAL 100k 1% 1/4W
R636	1-214-961-00	s	METAL 750K 1% 1/2W
R653	1-212-712-00	s	METAL 270k 1% 1/2W
R654	1-214-180-00	s	METAL 100k 1% 1/4W
R655	1-214-158-00	s	METAL 12k 1% 1/4W
R663	1-214-180-00	s	METAL 100k 1% 1/4W
R665	1-214-961-00	s	METAL 750k 1% 1/2W
R705	1-214-156-00	s	METAL 10k 1% 1/4W
R707	1-214-156-00	s	METAL 10k 1% 1/4W
R708	1-214-165-00	s	METAL 24k 1% 1/4W
R709	1-214-158-00	s	METAL 12k 1% 1/4W

Ref.No.	Parts No.	SP	Description
RV501	1-224-251-XX	s	VAR,METAL GLAZE 4.7k
RV502	1-224-252-XX	s	VAR,METAL GLAZE 10k
RV503	1-224-251-XX	s	VAR,METAL GLAZE 4.7k
RV504	1-224-252-XX	s	VAR,METAL GLAZE 10k

SV-52A BOARD

This board includes the CF-9 board.

A-6715-250-A o MOUNTED CIRCUIT BOARD,SV-52A

C8	1-123-332-00	s	ELECT 47 20% 50V
C9	1-102-110-00	s	CERAMIC 220PF 10% 50V
C10	1-106-188-00	s	MYLAR 0.0047 10% 50V
C11	1-123-307-00	s	ELECT 100 20% 10V
C13	1-123-381-00	s	ELECT 2.2 20% 50V
C14	1-123-381-00	s	ELECT 2.2 20% 50V
C15	1-106-180-00	s	MYLAR 0.0022 10% 50V
C16	1-106-180-00	s	MYLAR 0.0022 10% 50V
C21	1-106-188-00	s	MYLAR 0.0047 10% 50V
C23	1-106-188-00	s	MYLAR 0.0047 10% 50V
C28	1-131-408-00	s	TANTALUM 1 20% 35V
C29	1-123-380-00	s	ELECT 1 20% 50V
C30	1-123-356-00	s	ELECT 10 20% 16V
C31	1-161-342-00	s	CERAMIC 43PF 5% 50V
C32	1-106-180-00	s	MYLAR 0.0022 10% 50V
C34	1-108-355-00	s	MYLAR 0.0056 10% 50V
C35	1-130-224-00	s	FILM 0.015 5% 50V
C36	1-106-188-00	s	MYLAR 0.0047 10% 50V
C37	1-106-188-00	s	MYLAR 0.0047 10% 50V
C38	1-131-408-00	s	TANTALUM 1 20% 35V
C39	1-102-114-00	s	CERAMIC 470PF 10% 50V
C40	1-107-227-00	s	MYLAR 0.001 10% 50V
C43	1-123-309-00	s	ELECT 330 20% 10V
C50	1-131-408-00	s	TANTALUM 1 10% 35V
C54	1-106-180-00	s	MYLAR 0.0022 10% 50V
C55	1-131-408-00	s	TANTALUM 1 10% 35V
C57	1-106-180-00	s	MYLAR 0.0022 10% 50V
C63	1-123-381-00	s	ELECT 2.2 20% 50V
C64	1-108-237-00	s	MYLAR 0.0068 10% 50V
C67	1-107-228-00	s	MYLAR 0.0015 10% 50V
C71	1-123-356-00	s	ELECT 10 20% 50V
C73	1-102-114-00	s	CERAMIC 470PF 10% 50V
C74	1-123-332-00	s	ELECT 47 20% 50V
C75	1-123-332-00	s	ELECT 47 20% 50V
C76	1-123-332-00	s	ELECT 47 20% 50V
C77	1-123-332-00	s	ELECT 47 20% 50V
C78	1-123-332-00	s	ELECT 47 20% 50V
C79	1-123-332-00	s	ELECT 47 20% 50V
C80	1-123-332-00	s	ELECT 47 20% 50V
C81	1-123-332-00	s	ELECT 47 20% 50V
C82	1-123-332-00	s	ELECT 47 20% 50V
C83	1-123-332-00	s	ELECT 47 20% 50V
C100	1-161-013-00	s	CERAMIC 0.01 20% 25V
C101	1-161-013-00	s	CERAMIC 0.01 20% 25V
C102	1-123-356-00	s	ELECT 10 20% 50V

Ref.No.	Parts No.	SP	Description
C103	1-161-267-00	s	CERAMIC 47PF 5% 50V
C104	1-161-267-00	s	CERAMIC 47PF 5% 50V
C107	1-108-227-00	s	MYLAR 0.001 10% 50V
C108	1-102-106-00	s	CERAMIC 100PF 10% 50V
C110	1-123-380-00	s	ELECT 1 20% 100V
CN1	1-555-697-00	o	FLAT CABLE,50P
CP1	1-527-832-00	s	OSC BLOK, 4.43MHz
D2	8-719-815-55	s	1S1555
D3	8-719-815-55	s	1S1555
D4	8-719-815-55	s	1S1555
D5	8-719-815-55	s	1S1555
D6	8-719-815-55	s	1S1555
D7	8-719-815-55	s	1S1555
D8	8-719-815-55	s	1S1555
D9	8-719-815-55	s	1S1555
D10	8-719-151-07	s	RD5.1E-B
D11	8-719-815-55	s	1S1555
D13	8-719-815-55	s	1S1555
D14	8-719-815-55	s	1S1555
D15	8-719-815-55	s	1S1555
D16	8-719-815-55	s	1S1555
D17	8-719-815-55	s	1S1555
D18	8-719-815-55	s	1S1555
D19	8-719-815-55	s	1S1555
D20	8-719-815-55	s	1S1555
D21	8-719-815-55	s	1S1555
D22	8-719-815-55	s	1S1555
D23	8-719-815-55	s	1S1555
D24	8-719-815-55	s	1S1555
D25	8-719-815-55	s	1S1555
D26	8-719-815-55	s	1S1555
D30	8-719-815-55	s	1S1555
D31	8-719-815-55	s	1S1555
D32	8-719-815-55	s	1S1555
D33	8-719-815-55	s	1S1555
D36	8-719-815-55	s	1S1555
D37	8-719-815-55	s	1S1555
D38	8-719-815-55	s	1S1555
D39	8-719-815-55	s	1S1555
D40	8-719-815-55	s	1S1555
D41	8-719-815-55	s	1S1555
D42	8-719-815-55	s	1S1555
D43	8-719-815-55	s	1S1555
D44	8-719-815-55	s	1S1555
D45	8-719-911-19	s	1SS119
D46	8-719-815-55	s	1S1555
D47	8-719-815-55	s	1S1555
D48	8-719-815-55	s	1S1555
D49	8-719-815-55	s	1S1555
D50	8-719-815-55	s	1S1555
D51	8-719-815-55	s	1S1555
D52	8-719-815-55	s	1S1555

Ref.No.	Parts No.	SP	Description
D53	8-719-815-55	s	1S1555
D55	8-719-815-55	s	1S1555
D56	8-719-815-55	s	1S1555
D57	8-719-815-55	s	1S1555
D58	8-719-815-55	s	1S1555
D60	8-719-911-19	s	1SS119
D65	8-719-815-55	s	1S1555
D66	8-719-815-55	s	1S1555
IC1	8-759-145-58	s	uPC4558C(NEC)
IC2	8-759-729-03	s	NJM2903D(JRC)
IC3	8-759-145-58	s	uPC4558C(NEC)
IC4	8-759-132-40	s	uPC324C(NEC)
IC5	8-751-941-04	s	CX194B-4(SONY)
IC6	8-759-132-40	s	uPC324C(NEC)
IC7	8-759-131-11	s	uPC311C(NEC)
IC8	8-759-132-40	s	uPC324C(NEC)
IC9	8-759-131-11	s	uPC311C(NEC)
IC10	8-759-645-17	s	M54517P(MITSUBISHI)
IC11	8-759-240-69	s	TC4069UBP(TOSHIBA)
IC12	8-759-045-38	s	MC14538BCP(MOTOROLA)
IC13	8-759-145-58	s	uPC4558C(NEC)
IC14	8-759-240-99	s	TC4099BP(TOSHIBA)
IC15	8-759-241-61	s	TC40161BP(TOSHIBA)
IC16	8-759-240-53	s	TC4053BP(TOSHIBA)
IC17	8-759-240-52	s	TC4052BP(TOSHIBA)
IC18	8-759-240-99	s	TC4099BP(TOSHIBA)
IC19	8-759-240-11	s	TC4011BP(TOSHIBA)
IC20	8-759-240-23	s	TC4023BP(TOSHIBA)
IC21	8-759-240-01	s	TC4001BP(TOSHIBA)
IC22	8-759-240-69	s	TC4069UBP(TOSHIBA)
IC23	8-759-240-30	s	TC4030BP(TOSHIBA)
IC24	8-759-240-11	s	TC4011BP(TOSHIBA)
IC25	8-759-205-76	s	TC504013BP(TOSHIBA)
IC26	8-759-240-01	s	TC4001BP(TOSHIBA)
IC27	8-759-240-69	s	TC4069UBP(TOSHIBA)
IC28	8-759-045-38	s	MC14538BCP(MOTOROLA)
IC29	8-759-240-53	s	TC4053BP(TOSHIBA)
IC30	8-759-240-11	s	TC4011BP(TOSHIBA)
IC31	8-759-045-38	s	MC14538BCP(MOTOROLA)
IC32	8-759-045-38	s	MC14538BCP(MOTOROLA)
IC33	8-759-045-38	s	MC14538BCP(MOTOROLA)
IC34	8-759-240-01	s	TC4001BP(TOSHIBA)
IC100	1-464-259-00	s	CORRECTION UNIT
Q3	8-729-600-27	s	2SC634SP
Q4	8-729-600-27	s	2SC634SP
Q5	8-729-173-37	s	2SA733-P
Q6	8-729-600-27	s	2SC634SP
Q8	8-729-173-37	s	2SA733-P
Q9	8-729-173-37	s	2SA733-P
Q10	8-729-173-37	s	2SA733-P
Q11	8-729-600-27	s	2SC634SP
Q12	8-729-600-27	s	2SC634SP
Q13	8-729-600-27	s	2SC634SP
Q14	8-729-600-27	s	2SC634SP
Q15	8-729-600-27	s	2SC634SP
Q16	8-729-600-27	s	2SC634SP
Q17	8-729-600-27	s	2SC634SP
Q18	8-729-600-27	s	2SC634SP

Ref.No.	Parts No.	SP	Description
Q19	8-729-201-05	s	2SC2878-B
Q20	8-729-600-27	s	2SC634SP
Q21	8-729-177-43	s	2SD774
Q22	8-729-364-12	s	2SC641K
Q23	8-729-173-37	s	2SA733-P
Q24	8-729-600-27	s	2SC634SP
Q25	8-729-600-27	s	2SC634SP
Q26	8-729-173-37	s	2SA733-P
Q27	8-729-173-37	s	2SA733-P
Q28	8-729-201-05	s	2SC2878-B
Q29	8-729-201-05	s	2SC2878-B
Q30	8-729-600-27	s	2SC634SP
Q31	8-729-201-05	s	2SC2878-B
Q32	8-729-201-05	s	2SC2878-B
Q33	8-729-600-27	s	2SC634SP
Q34	8-729-600-27	s	2SC634SP
R74	1-214-156-00	s	METAL 10k 1% 1/4W
R157	1-247-240-00	s	CARBON 1k 5% 1/2W
⚠R290	1-217-387-00	s	FUSIBLE 10 5% 1/4W
R292	1-217-446-00	s	FUSIBLE 100 5% 1/2W
R293	1-217-391-00	s	FUSIBLE 22 5% 1/4W
RV1	1-224-255-XX	s	VAR,METAL GLAZE 100k
RV2	1-224-255-XX	s	VAR,METAL GLAZE 100k
RV3	1-224-252-XX	s	VAR,METAL GLAZE 10k
RV4	1-224-254-XX	s	VAR,METAL GLAZE 47k
RV5	1-226-775-XX	s	VAR,METAL GLAZE 100k
RV6	1-224-256-XX	s	VAR,METAL GLAZE 220k
RV7	1-226-776-XX	s	VAR,METAL GLAZE 220k
RV8	1-224-256-XX	s	VAR,METAL GLAZE 220k
RV9	1-224-255-XX	s	VAR,METAL GLAZE 100k
RV10	1-224-253-XX	s	VAR,METAL GLAZE 22k
RV11	1-224-252-XX	s	VAR,METAL GLAZE 10k
RV12	1-224-251-XX	s	VAR,METAL GLAZE 4.7k
RV13	1-224-249-XX	s	VAR,METAL GLAZE 1k
RV14	1-224-254-XX	s	VAR,METAL GLAZE 47k
RV15	1-224-252-XX	s	VAR,METAL GLAZE 10k
RV16	1-224-248-XX	s	VAR,METAL GLAZE 470
RV17	1-224-254-XX	s	VAR,METAL GLAZE 47k
RV100	1-226-774-XX	s	VAR,METAL GLAZE 47k

SY-36 BOARD

	A-6717-206-B	o	MOUNTED CIRCUIT BOARD,SY-36
C1	1-127-460-00	s	ELECT 1 20% 25V
C4	1-131-419-00	s	ELECT 2.2 20% 10V
C9	1-127-460-00	s	ELECT 1 20% 25V
C11	1-127-460-00	s	ELECT 1 20% 25V
C12	1-127-460-00	s	ELECT 1 20% 25V

Ref.No.	Parts No.	SP	Description
C13	1-127-460-00	s	ELECT 1 20% 25V
C14	1-131-419-00	s	ELECT 2.2 20% 10V
C21	1-131-419-00	s	ELECT 2.2 20% 10V
C31	1-127-460-00	s	ELECT 1 20% 25V
C39	1-131-402-00	s	ELECT 0.1 20% 16V
C55	1-123-307-00	s	ELECT 100 20% 10V
C56	1-123-333-00	s	ELECT 100 20% 25V
C57	1-161-494-00	s	CERAMIC 0.022 30% 25V
C58	1-161-494-00	s	CERAMIC 0.022 30% 25V
C59	1-161-494-00	s	CERAMIC 0.022 30% 25V
C60	1-161-494-00	s	CERAMIC 0.022 30% 25V
C61	1-161-494-00	s	CERAMIC 0.022 30% 25V
C62	1-161-494-00	s	CERAMIC 0.022 30% 25V
C63	1-161-494-00	s	CERAMIC 0.022 30% 25V
C64	1-161-494-00	s	CERAMIC 0.022 30% 25V
C65	1-161-494-00	s	CERAMIC 0.022 30% 25V
C66	1-161-494-00	s	CERAMIC 0.022 30% 25V
C67	1-161-494-00	s	CERAMIC 0.022 30% 25V
C68	1-161-494-00	s	CERAMIC 0.022 30% 25V
C69	1-161-494-00	s	CERAMIC 0.022 30% 25V
C70	1-161-494-00	s	CERAMIC 0.022 30% 25V
C71	1-161-494-00	s	CERAMIC 0.022 30% 25V
C72	1-161-494-00	s	CERAMIC 0.022 30% 25V
C73	1-161-494-00	s	CERAMIC 0.022 30% 25V
C74	1-161-494-00	s	CERAMIC 0.022 30% 25V
C75	1-161-494-00	s	CERAMIC 0.022 30% 25V
C76	1-161-494-00	s	CERAMIC 0.022 30% 25V
C77	1-161-494-00	s	CERAMIC 0.022 30% 25V
C78	1-161-494-00	s	CERAMIC 0.022 30% 25V
C79	1-161-494-00	s	CERAMIC 0.022 30% 25V
C80	1-161-494-00	s	CERAMIC 0.022 30% 25V
C81	1-161-494-00	s	CERAMIC 0.022 30% 25V
C82	1-161-494-00	s	CERAMIC 0.022 30% 25V
C83	1-161-494-00	s	CERAMIC 0.022 30% 25V
C84	1-161-494-00	s	CERAMIC 0.022 30% 25V
C85	1-161-494-00	s	CERAMIC 0.022 30% 25V
C86	1-161-494-00	s	CERAMIC 0.022 30% 25V
C87	1-161-494-00	s	CERAMIC 0.022 30% 25V
C88	1-161-494-00	s	CERAMIC 0.022 30% 25V
C89	1-161-494-00	s	CERAMIC 0.022 30% 25V
C90	1-161-494-00	s	CERAMIC 0.022 30% 25V
C91	1-161-494-00	s	CERAMIC 0.022 30% 25V
C92	1-161-494-00	s	CERAMIC 0.022 30% 25V
C93	1-161-494-00	s	CERAMIC 0.022 30% 25V
C94	1-161-494-00	s	CERAMIC 0.022 30% 25V
C95	1-127-460-00	s	ELECT 1 20% 25V
C96	1-127-460-00	s	ELECT 1 20% 25V
C97	1-131-419-00	s	ELECT 2.2 20% 10V
C98	1-127-460-00	s	ELECT 1 20% 25V
C101	1-127-460-00	s	ELECT 1 20% 25V
C102	1-127-460-00	s	ELECT 1 20% 25V
C103	1-127-460-00	s	ELECT 1 20% 25V
C116	1-102-114-00	s	CERAMIC 470PF 10% 50V
C117	1-102-114-00	s	CERAMIC 470PF 10% 50V
C118	1-127-460-00	s	ELECT 1 20% 25V

Ref.No.	Parts No.	SP	Description
D1	8-719-911-19	s	1SS119
D2	8-719-911-19	s	1SS119
D3	8-719-911-19	s	1SS119
D4	8-719-911-19	s	1SS119
D5	8-719-911-19	s	1SS119
D6	8-719-911-19	s	1SS119
D7	8-719-911-19	s	1SS119
D8	8-719-911-19	s	1SS119
D9	8-719-911-19	s	1SS119
D10	8-719-911-19	s	1SS119
D11	8-719-911-19	s	1SS119
D12	8-719-911-19	s	1SS119
D13	8-719-911-19	s	1SS119
D14	8-719-911-19	s	1SS119
D15	8-719-911-19	s	1SS119
D16	8-719-911-19	s	1SS119
D20	8-719-911-19	s	1SS119
D21	8-719-911-19	s	1SS119
D22	8-719-911-19	s	1SS119
D23	8-719-911-19	s	1SS119
D25	8-719-911-19	s	1SS119
D26	8-719-911-19	s	1SS119
D27	8-719-911-19	s	1SS119
D30	8-719-911-19	s	1SS119
D31	8-719-911-19	s	1SS119
D33	8-719-911-19	s	1SS119
D34	8-719-911-19	s	1SS119
D35	8-719-911-19	s	1SS119
D37	8-719-911-19	s	1SS119
D38	8-719-911-19	s	1SS119
D39	8-719-911-19	s	1SS119
D40	8-719-911-19	s	1SS119
D41	8-719-911-19	s	1SS119
D42	8-719-911-19	s	1SS119
D43	8-719-911-19	s	1SS119
D44	8-719-911-19	s	1SS119
D45	8-719-911-19	s	1SS119
D46	8-719-911-19	s	1SS119
D47	8-719-911-19	s	1SS119
D48	8-719-911-19	s	1SS119
D49	8-719-911-19	s	1SS119
D50	8-719-911-19	s	1SS119
D51	8-719-911-19	s	1SS119
D52	8-719-911-19	s	1SS119
D53	8-719-911-19	s	1SS119
D54	8-719-911-19	s	1SS119
D55	8-719-911-19	s	1SS119
D56	8-719-911-19	s	1SS119
D57	8-719-911-19	s	1SS119
D58	8-719-911-19	s	1SS119
D59	8-719-911-19	s	1SS119
IC1	8-759-241-61	s	TC40161BP(TOSHIBA)
IC2	8-759-245-12	s	TC4512BP(TOSHIBA)
IC3	8-759-240-81	s	TC4081BP(TOSHIBA)
IC4	8-759-240-11	s	TC4011BP(TOSHIBA)
IC5	8-759-240-73	s	TC4073BP(TOSHIBA)

Ref.No.	Parts No.	SP	Description
IC6	8-759-240-75	s	TC4075BP(TOSHIBA)
IC7	8-759-240-81	s	TC4081BP(TOSHIBA)
IC8	8-759-245-12	s	TC4512BP(TOSHIBA)
IC9	8-759-240-81	s	TC4081BP(TOSHIBA)
IC10	8-759-240-69	s	TC4069UBP(TOSHIBA)
IC11	8-759-240-69	s	TC4069UBP(TOSHIBA)
IC12	8-759-240-82	s	TC4082BP(TOSHIBA)
IC13	8-759-240-69	s	TC4069UBP(TOSHIBA)
IC14	8-759-240-71	s	TC4071BP(TOSHIBA)
IC15	8-759-240-01	s	TC4001BP(TOSHIBA)
IC16	8-759-240-43	s	TC4043BP(TOSHIBA)
IC17	8-759-240-71	s	TC4071BP(TOSHIBA)
IC18	8-759-240-71	s	TC4071BP(TOSHIBA)
IC19	8-759-240-73	s	TC4073BP(TOSHIBA)
IC20	8-759-600-61	s	M54529AP(MITSUBISHI)
IC21	8-759-240-25	s	TC4025BP(TOSHIBA)
IC22	8-759-240-75	s	TC4075BP(TOSHIBA)
IC23	8-759-240-01	s	TC4001BP(TOSHIBA)
IC24	8-759-240-69	s	TC4069UBP(TOSHIBA)
IC25	8-759-240-25	s	TC4025BP(TOSHIBA)
IC26	8-759-240-43	s	TC4043BP(TOSHIBA)
IC27	8-759-600-61	s	M54529AP(MITSUBISHI)
IC28	8-759-240-69	s	TC4069UBP(TOSHIBA)
IC29	8-759-240-23	s	TC4023BP(TOSHIBA)
IC30	8-759-045-84	s	MC14584BCP(MOTOROLA)
IC31	8-759-240-81	s	TC4081BP(TOSHIBA)
IC32	8-759-240-11	s	TC4011BP(TOSHIBA)
IC33	8-759-240-01	s	TC4001BP(TOSHIBA)
IC34	8-759-240-69	s	TC4069UBP(TOSHIBA)
IC35	8-759-240-75	s	TC4075BP(TOSHIBA)
IC36	8-759-240-71	s	TC4071BP(TOSHIBA)
IC37	8-759-240-12	s	TC4012BP(TOSHIBA)
IC38	8-759-240-71	s	TC4071BP(TOSHIBA)
IC39	8-759-240-72	s	TC4072BP(TOSHIBA)
IC40	8-759-240-73	s	TC4073BP(TOSHIBA)
IC41	8-759-245-28	s	TC4528BP(TOSHIBA)
IC42	8-759-240-81	s	TC4081BP(TOSHIBA)
IC43	8-759-240-11	s	TC4011BP(TOSHIBA)
IC44	8-759-600-61	s	M54529AP(MITSUBISHI)
IC45	8-759-240-73	s	TC4073BP(TOSHIBA)
IC46	8-759-240-71	s	TC4071BP(TOSHIBA)
IC47	8-759-240-01	s	TC4001BP(TOSHIBA)
IC48	8-759-240-01	s	TC4001BP(TOSHIBA)
IC49	8-759-240-11	s	TC4011BP(TOSHIBA)
IC50	8-759-345-38	s	HD14538BP(HITACHI)
IC51	8-759-240-68	s	TC4068BP(TOSHIBA)
IC52	8-759-240-23	s	TC4023BP(TOSHIBA)
IC53	8-759-240-43	s	TC4043BP(TOSHIBA)
IC54	8-759-240-69	s	TC4069UBP(TOSHIBA)
IC55	8-759-240-69	s	TC4069UBP(TOSHIBA)
IC56	8-759-600-61	s	M54529AP(MITSUBISHI)
IC57	8-759-240-93	s	TC4093BP(TOSHIBA)
IC58	8-759-240-73	s	TC4073BP(TOSHIBA)
IC59	8-759-240-01	s	TC4001BP(TOSHIBA)
IC60	8-759-600-61	s	M54529AP(MITSUBISHI)
IC61	8-759-045-84	s	MC14584BCP(MOTOROLA)
IC62	8-759-600-61	s	M54529AP(MITSUBISHI)
IC63	8-759-205-77	s	TC504027BP(TOSHIBA)
IC64	8-759-240-71	s	TC4071BP(TOSHIBA)
IC65	8-759-240-82	s	TC4082BP(TOSHIBA)

Ref.No.	Parts No.	SP	Description
IC66	8-757-561-00	s	CX756A(SONY)
IC67	8-757-570-00	s	CX757(SONY)
IC68	8-759-240-01	s	TC4001BP(TOSHIBA)
IC69	8-759-240-71	s	TC4071BP(TOSHIBA)
IC70	8-759-240-81	s	TC4081BP(TOSHIBA)
IC71	8-759-240-11	s	TC4011BP(TOSHIBA)
IC72	8-759-240-81	s	TC4081BP(TOSHIBA)
IC73	8-759-240-69	s	TC4069UBP(TOSHIBA)
IC74	8-759-240-75	s	TC4075BP(TOSHIBA)
Q1	8-729-201-05	s	2SC2878-B
Q2	8-729-600-27	s	2SC634SP
Q3	8-729-600-27	s	2SC634SP
RB1	1-231-599-00	s	10k x 7
RV1	1-226-096-00	s	VAR,METAL FILM 500k
RV2	1-224-940-00	s	VAR,METAL FILM 10k
RV3	1-226-096-00	s	VAR,METAL FILM 500k

SY-37A BOARD

	A-6717-393-A	o	MOUNTED CIRCUIT BOARD,SY-37A
C1	1-123-309-00	s	ELECT 330 20% 10V
C2	1-102-108-00	s	CERAMIC 150PF 10% 50V
C3	1-123-332-00	s	ELECT 47 20% 25V
C5	1-102-963-00	s	CERAMIC 33PF 5% 50V
C6	1-102-963-00	s	CERAMIC 33PF 5% 50V
C7	1-102-074-00	s	CERAMIC 0.001 10% 50V
CN31	1-560-454-31	o	FLAT CABLE,40P
CN32	1-560-454-31	o	FLAT CABLE,40P
D1	8-719-160-34	s	RD6.8F-B2
D2	8-719-709-25	s	1S1925-P
D3	8-719-911-19	s	1SS119
D5	8-719-911-19	s	1SS119
D7	8-719-911-19	s	1SS119
D8	8-719-911-19	s	1SS119
D9	8-719-911-19	s	1SS119
D10	8-719-911-19	s	1SS119
IC1	8-759-995-14	s	AM9513DC(TI)
IC2	8-759-906-80	s	LH0080(SHARP)
IC4	8-759-906-84	s	LH0084(SHARP)
IC5	8-759-995-19	s	AM9519PC(TI)
IC8	8-759-905-23	s	MSM2128-15RS(OKI)
IC9	8-759-926-31	s	AM26LS31PC(TI)
IC10	8-759-926-32	s	AM26LS32PC(TI)
IC11	8-759-902-44	s	SN74LS244N(TI)
IC12	8-759-901-39	s	SN74LS139N(TI)
IC14	8-759-045-98	s	MC14598BCP(MOTOROLA)
IC15	8-759-974-07	s	SN7407N(TI)
IC16	8-759-902-44	s	SN74LS244N(TI)
IC17	8-759-900-74	s	SN74LS74AN(TI)
IC18	8-759-902-44	s	SN74LS244N(TI)
IC19	8-759-045-98	s	MC14598BCP(MOTOROLA)
IC20	8-759-903-78	s	SN74LS378N(TI)
IC21	8-759-903-77	s	SN74LS377N(TI)
IC22	8-759-801-11	s	LB1261(SANYO)
IC23	8-759-801-11	s	LB1261(SANYO)
IC24	8-759-045-98	s	MC14598BCP(MOTOROLA)
IC25	8-759-900-05	s	SN74LS05N(TI)
IC26	8-759-903-77	s	SN74LS377N(TI)
IC27	8-759-220-74	s	TC40H074P(TOSHIBA)
IC28	8-759-240-20	s	TC4020BP(TOSHIBA)
IC29	8-759-902-44	s	SN74LS244N(TI)
IC30	8-759-045-98	s	MC14598BCP(MOTOROLA)
IC31	8-759-900-05	s	SN74LS05N(TI)
IC32	8-759-903-77	s	SN74LS377N(TI)
IC33	8-759-900-32	s	SN74LS32N(TI)
IC34	8-759-240-01	s	TC4001BP(TOSHIBA)
IC35	8-759-902-44	s	SN74LS244N(TI)
IC36	8-759-045-98	s	MC14598BCP(MOTOROLA)
IC37	8-759-245-12	s	TC4512BP(TOSHIBA)
IC38	8-759-903-77	s	SN74LS377N(TI)
IC39	8-759-045-84	s	MC14584BCP(MOTOROLA)
IC40	8-759-902-44	s	SN74LS244N(TI)
IC41	8-759-045-98	s	MC14598BCP(MOTOROLA)
IC42	8-759-245-12	s	TC4512BP(TOSHIBA)
IC43	8-759-903-77	s	SN74LS377N(TI)
IC44	8-759-901-38	s	SN74LS138N(TI)
IC45	8-759-729-03	s	NJM2903D(JRC)
IC46	8-759-902-44	s	SN74LS244N(TI)
IC48	8-759-245-12	s	TC4512BP(TOSHIBA)
IC49	8-759-903-77	s	SN74LS377N(TI)
IC50	8-759-901-38	s	SN74LS138N(TI)
IC51	8-759-223-68	s	TC40H368P(TOSHIBA)
IC52	8-759-902-44	s	SN74LS244N(TI)
IC53	8-759-245-12	s	TC4512BP(TOSHIBA)
IC54	8-759-903-77	s	SN74LS377N(TI)
IC55	8-759-901-38	s	SN74LS138N(TI)
IC56	8-759-903-77	s	SN74LS377N(TI)
IC57	8-759-245-12	s	TC4512BP(TOSHIBA)
IC58	8-759-903-77	s	SN74LS377N(TI)
IC59	8-759-901-38	s	SN74LS138N(TI)
IC61	8-759-100-54	s	uPA54H(NEC)
IC62	8-759-100-64	s	uPA64H(NEC)
IC63	8-759-100-54	s	uPA54H(NEC)
IC64	8-759-100-64	s	uPA64H(NEC)
IC65	8-759-901-58	s	SN74LS158N(TI)
IC66	8-759-901-58	s	SN74LS158N(TI)
IC70	8-759-926-31	s	AM26LS31PC(TI)
IC71	8-759-926-32	s	AM26LS32PC(TI)
IC73	8-759-916-29	s	SN74HC74N(TI)
IC74	8-759-901-39	s	SN74LS139N(TI)
IC75	8-759-765-35	s	HN4827128G-U850-V1(HITACHI)

Ref.No.	Parts No.	SP	Description
L1	1-459-155-00	s	45uH
Q1	8-729-194-57	s	2SC945-P
Q2	8-729-315-63	s	2SB856
Q3	8-729-194-57	s	2SC945-P
Q4	8-729-194-57	s	2SC945-P
S1	1-553-542-00	s	KEY "RESET"
S2	1-516-923-21	s	DIP
S3	1-553-076-21	s	SLIDE "KY"
S5	1-516-925-21	s	DIP "EIR/CCIR"
X1	1-527-827-00	s	CRYSTAL 4.9152MHz

SY-71 BOARD

	A-6717-208-A	o	MOUNTED CIRCUIT BOARD,SY-71
C1	1-123-332-00	s	ELECT 47 20% 25V
C2	1-123-333-00	s	ELECT 100 20% 25V
C3	1-123-322-00	s	ELECT 330 20% 16V
C4	1-123-322-00	s	ELECT 330 20% 16V
C5	1-123-322-00	s	ELECT 330 20% 16V
C6	1-123-322-00	s	ELECT 330 20% 16V
C7	1-123-360-00	s	ELECT 100 20% 50V
C8	1-123-360-00	s	ELECT 100 20% 50V
C9	1-123-360-00	s	ELECT 100 20% 50V
C10	1-123-333-00	s	ELECT 100 20% 25V
C11	1-123-332-00	s	ELECT 47 20% 25V
C12	1-123-333-00	s	ELECT 100 20% 25V
C13	1-123-299-00	s	ELECT 1000 20% 6.3V
C14	1-131-408-00	s	ELECT 1 20% 25V
C15	1-123-356-00	s	ELECT 10 20% 50V
C16	1-123-332-00	s	ELECT 47 20% 25V
C17	1-123-332-00	s	ELECT 47 20% 25V
C19	1-123-369-00	s	ELECT 4.7 20% 63V
C20	1-123-380-00	s	ELECT 1 20% 100V
D1	8-719-911-19	s	1SS119
D2	8-719-911-19	s	1SS119
D3	8-719-911-19	s	1SS119
D4	8-719-911-19	s	1SS119
D5	8-719-911-19	s	1SS119
D6	8-719-911-19	s	1SS119
D7	8-719-911-19	s	1SS119
D8	8-719-200-02	s	10E-2
D9	8-719-200-02	s	10E-2
D10	8-719-200-02	s	10E-2
D11	8-719-815-55	s	1S1555
D12	8-719-911-19	s	1SS119
D13	8-719-200-02	s	10E-2
D14	8-719-200-02	s	10E-2
D15	8-719-200-02	s	10E-2
D16	8-719-815-55	s	1S1555
D18	8-719-200-02	s	10E-2
D19	8-719-200-02	s	10E-2
D20	8-719-200-02	s	10E-2
D21	8-719-815-55	s	1S1555
D22	8-719-911-19	s	1SS119
D23	8-719-200-02	s	10E-2
D24	8-719-200-02	s	10E-2
D25	8-719-200-02	s	10E-2
D26	8-719-815-55	s	1S1555
D28	8-719-911-19	s	1SS119
D29	8-719-200-02	s	10E-2
D31	8-719-200-02	s	10E-2
D33	8-719-200-02	s	10E-2
D34	8-719-200-02	s	10E-2
D35	8-719-200-02	s	10E-2
D37	8-719-815-55	s	1S1555
D38	8-719-200-02	s	10E-2
D39	8-719-911-19	s	1SS119
D40	8-719-200-02	s	10E-2
D41	8-719-911-19	s	1SS119
D42	8-719-200-02	s	10E-2
D43	8-719-200-02	s	10E-2
D44	8-719-200-02	s	10E-2
D45	8-719-815-55	s	1S1555
D46	8-719-911-19	s	1SS119
D47	8-719-200-02	s	10E-2
D48	8-719-200-02	s	10E-2
D49	8-719-200-02	s	10E-2
D50	8-719-815-55	s	1S1555
D52	8-719-911-19	s	1SS119
D53	8-719-911-19	s	1SS119
D54	8-719-200-02	s	10E-2
D55	8-719-200-02	s	10E-2
D56	8-719-200-02	s	10E-2
D57	8-719-200-02	s	10E-2
D58	8-719-200-02	s	10E-2
IC1	8-743-430-00	s	BX343(SONY)
Q1	8-729-194-57	s	2SC945-P
Q2	8-729-103-43	s	2SB734
Q3	8-729-177-43	s	2SD774
Q4	8-729-600-18	s	2SC633-SP8
Q5	8-729-194-57	s	2SC945-P
Q6	8-729-103-43	s	2SB734
Q7	8-729-177-43	s	2SD774
Q8	8-729-600-18	s	2SC633-SP8
Q9	8-729-194-57	s	2SC945-P
Q10	8-729-177-43	s	2SD774
Q11	8-729-194-57	s	2SC945-P
Q12	8-729-103-43	s	2SB734
Q13	8-729-177-43	s	2SD774
Q14	8-729-600-18	s	2SC633-SP8
Q15	8-729-194-57	s	2SC945-P

Ref.No.	Parts No.	SP	Description
Q16	8-729-177-43	s	2SD774
Q17	8-729-103-43	s	2SB734
Q18	8-729-600-18	s	2SC633-SP8
Q19	8-729-194-57	s	2SC945-P
Q20	8-729-283-42	s	2SB834
Q21	8-729-331-53	s	2SC2351
Q22	8-729-194-57	s	2SC945-P
Q23	8-729-283-42	s	2SB834
Q24	8-729-331-53	s	2SC2351
Q25	8-729-194-57	s	2SC945-P
Q26	8-729-283-42	s	2SB834
Q27	8-729-331-53	s	2SC2315
Q28	8-729-600-18	s	2SC633-SP8
Q29	8-729-194-57	s	2SC945-P
Q30	8-729-384-46	s	2SA844-C
Q31	8-729-194-57	s	2SC945-P
Q32	8-729-103-43	s	2SB734
Q33	8-729-194-57	s	2SC945-P
Q34	8-729-194-57	s	2SC945-P
Q35	8-729-283-42	s	2SB834
Q36	8-729-331-53	s	2SC2315
Q37	8-729-600-18	s	2SC633-SP8
Q38	8-729-194-57	s	2SC945-P
Q39	8-729-194-57	s	2SC945-P
Q40	8-729-283-42	s	2SB834
Q41	8-729-331-53	s	2SC2315
Q42	8-729-600-18	s	2SC633-SP8
Q52	8-729-194-57	s	2SC945-P
Q53	8-729-194-57	s	2SC945-P
R36	1-247-232-00	s	CARBON 470 5% 1/2W
R39	1-247-232-00	s	CARBON 470 5% 1/2W
⚠ R42	1-206-773-00	s	CEMENTED 27 10% 5W
R43	1-206-773-00	s	CEMENTED 27 10% 5W
R84	1-217-020-00	s	CEMENTED 12 10% 3W

TC-12 BOARD

	1-604-760-00	o	PRINTED CIRCUIT BOARD,TC-12.

TC-13 BOARD

	A-6715-135-B	o	MOUNTED CIRCUIT BOARD,TC-13
C6	1-123-332-00	s	ELECT 47 20% 25V
C7	1-123-332-00	s	ELECT 47 20% 25V
C8	1-123-332-00	s	ELECT 47 20% 25V
C9	1-123-332-00	s	ELECT 47 20% 25V
C10	1-101-004-00	s	CERAMIC 0.01 50V

Ref.No.	Parts No.	SP	Description
C11	1-102-114-00	s	CERAMIC 470PF 10% 50V
C13	1-102-114-00	s	CERAMIC 470PF 10% 50V
C101	1-123-332-00	s	ELECT 47 20% 25V
C102	1-123-356-00	s	ELECT 10 20% 50V
C103	1-123-356-00	s	ELECT 10 20% 50V
C104	1-123-356-00	s	ELECT 10 20% 50V
C105	1-123-332-00	s	ELECT 47 20% 25V
C106	1-123-356-00	s	ELECT 10 20% 50V
C108	1-123-330-00	s	ELECT 22 20% 25V
C110	1-123-333-00	s	ELECT 100 20% 25V
C113	1-123-333-00	s	ELECT 100 20% 25V
C114	1-123-332-00	s	ELECT 47 20% 25V
C115	1-123-356-00	s	ELECT 10 20% 50V
C116	1-123-356-00	s	ELECT 10 20% 50V
C117	1-123-356-00	s	ELECT 10 20% 50V
C118	1-123-356-00	s	ELECT 10 20% 50V
C119	1-123-332-00	s	ELECT 47 20% 25V
C120	1-123-356-00	s	ELECT 10 20% 50V
C121	1-123-321-00	s	ELECT 220 20% 16V
C130	1-123-332-00	s	ELECT 47 20% 25V
C131	1-123-333-00	s	ELECT 100 20% 25V
C132	1-123-333-00	s	ELECT 100 20% 25V
C133	1-123-333-00	s	ELECT 100 20% 25V
C141	1-123-330-00	s	ELECT 22 20% 25V
C143	1-123-333-00	s	ELECT 100 20% 25V
C144	1-123-333-00	s	ELECT 100 20% 25V
C201	1-123-356-00	s	ELECT 10 20% 50V
C202	1-123-379-00	s	ELECT 0.47 20% 100V
C203	1-123-330-00	s	ELECT 22 20% 25V
C204	1-123-356-00	s	ELECT 10 20% 50V
C207	1-123-332-00	s	ELECT 47 20% 25V
C209	1-123-332-00	s	ELECT 47 20% 25V
C210	1-102-114-00	s	CERAMIC 470PF 10% 50V
D101	8-719-911-19	s	1SS119
D102	8-719-911-19	s	1SS119
D103	8-719-709-25	s	1S1925-P
D104	8-719-709-25	s	1S1925-P
D201	8-719-911-19	s	1SS119
D202	8-719-911-19	s	1SS119
D203	8-719-911-19	s	1SS119
D204	8-719-911-19	s	1SS119
D205	8-719-911-19	s	1SS119
IC1	8-759-245-10	s	TC4510BP(TOSHIBA)
IC2	8-759-245-10	s	TC4510BP(TOSHIBA)
IC3	8-759-245-10	s	TC4510BP(TOSHIBA)
IC4	8-759-245-10	s	TC4510BP(TOSHIBA)
IC5	8-759-245-10	s	TC4510BP(TOSHIBA)
IC6	8-759-245-10	s	TC4510BP(TOSHIBA)
IC7	8-759-245-10	s	TC4510BP(TOSHIBA)
IC8	8-759-240-23	s	TC4023BP(TOSHIBA)
IC9	8-759-240-71	s	TC4071BP(TOSHIBA)
IC10	8-759-240-69	s	TC4069UBP(TOSHIBA)
IC11	8-759-040-77	s	MC14077BCP(MOTOROLA)
IC12	8-759-240-27	s	TC4027BP(TOSHIBA)
IC13	8-759-245-12	s	TC4512BP(TOSHIBA)
IC14	8-759-245-12	s	TC4512BP(TOSHIBA)
IC15	8-759-245-12	s	TC4512BP(TOSHIBA)

Ref.No.	Parts No.	SP	Description
IC16	8-759-245-12	s	TC4512BP(TOSHIBA)
IC17	8-759-240-81	s	TC4081BP(TOSHIBA)
IC18	8-759-240-73	s	TC4073BP(TOSHIBA)
IC19	8-759-240-71	s	TC4071BP(TOSHIBA)
IC20	8-759-145-19	s	uPD4519BC(NEC)
IC101	8-759-700-00	s	NJM4562D-DR(JRC)
IC102	8-751-300-00	s	CX130(SONY)
IC103	8-756-222-20	s	2SC1963
IC104	8-759-101-13	s	uPA76V-FA(NEC)
IC201	8-749-909-15	s	BX3915A(SONY)
IC202	8-759-045-38	s	MC14538BCP(MOTOROLA)
IC203	8-759-245-39	s	TC4539BP(TOSHIBA)
IC204	8-759-245-12	s	TC4512BP(TOSHIBA)
IC205	8-759-240-01	s	TC4001BP(TOSHIBA)
IC206	8-759-240-11	s	TC4011BP(TOSHIBA)
IC207	8-759-240-85	s	TC4085BP(TOSHIBA)
Q101	8-729-194-57	s	2SC945-P
Q102	8-729-201-05	s	2SC2878-B
Q103	8-729-194-57	s	2SC945-P
Q104	8-729-194-57	s	2SC945-P
Q105	8-729-201-05	s	2SC2878-B
Q107	8-729-194-57	s	2SC945-P
Q108	8-729-201-05	s	2SC2878-B
Q109	8-729-194-57	s	2SC945-P
Q110	8-729-194-57	s	2SC945-P
Q111	8-729-194-57	s	2SC945-P
Q112	8-729-194-57	s	2SC945-P
Q113	8-729-194-57	s	2SC945-P
Q114	8-729-194-57	s	2SC945-P
Q116	8-729-201-05	s	2SC2878-B
Q201	8-729-194-57	s	2SC945-P
Q250	8-729-194-57	s	2SC945-P
Q251	8-729-194-57	s	2SC945-P
R139	1-214-084-00	s	METAL 10 1% 1/4W
RV101	1-224-252-XX	s	VAR,METAL GLAZE 10k
RV102	1-224-254-XX	s	VAR,METAL GLAZE 47k
RV103	1-224-247-XX	s	VAR,METAL GLAZE 100

TM-4 BOARD

	1-604-367-00	o	PRINTED CIRCUIT BOARD,TM-4

TM-8 BOARD

	1-604-364-00	o	PRINTED CIRCUIT BOARD,TM-8

Ref.No.	Parts No.	SP	Description

TM-14 BOARD

	1-606-977-00	o	PRINTED CIRCUIT BOARD,TM-14

YC-19 BOARD

All of the component parts on the YC-19 board are supplied together when you order MD-25 board.

	A-6711-593-A	o	MOUNTED CIRCUIT BOARD,YC-19
C1	1-163-035-00	s	CERAMIC 0.047 50V
C5	1-107-044-00	s	SILVERD MICA 3.3PF 0.5PF 500V
C101	1-163-035-00	s	CERAMIC 0.047 50V
C103	1-163-035-00	s	CERAMIC 0.047 50V
C105	1-163-035-00	s	CERAMIC CHIP 0.047 50V
C106	1-163-035-00	s	CERAMIC CHIP 0.047 50V
C107	1-163-035-00	s	CERAMIC CHIP 0.047 50V
C108	1-163-035-00	s	CERAMIC CHIP 0.047 50V
C109	1-163-035-00	s	CERAMIC CHIP 0.047 50V
C201	1-163-035-00	s	CERAMIC CHIP 0.047 50V
C202	1-163-035-00	s	CERAMIC CHIP 0.047 50V
C203	1-163-035-00	s	CERAMIC CHIP 0.047 50V
C204	1-163-035-00	s	CERAMIC CHIP 0.047 50V
C205	1-163-035-00	s	CERAMIC CHIP 0.047 50V
C206	1-163-035-00	s	CERAMIC CHIP 0.047 50V
C207	1-163-035-00	s	CERAMIC CHIP 0.047 50V
C208	1-163-035-00	s	CERAMIC CHIP 0.047 50V
C209	1-163-035-00	s	CERAMIC CHIP 0.047 50V
C210	1-163-035-00	s	CERAMIC CHIP 0.047 50V
C211	1-163-035-00	s	CERAMIC CHIP 0.047 50V
C212	1-163-035-00	s	CERAMIC CHIP 0.047 50V
C213	1-163-035-00	s	CERAMIC CHIP 0.047 50V
C214	1-163-035-00	s	CERAMIC CHIP 0.047 50V
C215	1-163-035-00	s	CERAMIC CHIP 0.047 50V
C216	1-163-035-00	s	CERAMIC CHIP 0.047 50V
C218	1-163-035-00	s	CERAMIC CHIP 0.047 50V
C219	1-163-035-00	s	CERAMIC CHIP 0.047 50V
C220	1-163-035-00	s	CERAMIC CHIP 0.047 50V
C221	1-163-035-00	s	CERAMIC CHIP 0.047 50V
C222	1-107-159-00	s	SILVERD MICA 33PF 5% 500V
C223	1-163-035-00	s	CERAMIC CHIP 0.047 50V
C224	1-163-035-00	s	CERAMIC CHIP 0.047 50V
C225	1-163-035-00	s	CERAMIC CHIP 0.047 50V
C226	1-163-035-00	s	CERAMIC CHIP 0.047 50V
C227	1-163-035-00	s	CERAMIC CHIP 0.047 50V
C228	1-163-035-00	s	CERAMIC CHIP 0.047 50V
C229	1-163-035-00	s	CERAMIC CHIP 0.047 50V
C230	1-163-035-00	s	CERAMIC CHIP 0.047 50V
C231	1-163-035-00	s	CERAMIC CHIP 0.047 50V
C232	1-163-035-00	s	CERAMIC CHIP 0.047 50V
C233	1-163-035-00	s	CERAMIC CHIP 0.047 50V
C234	1-163-035-00	s	CERAMIC CHIP 0.047 50V
C235	1-163-035-00	s	CERAMIC CHIP 0.047 50V
C236	1-163-035-00	s	CERAMIC CHIP 0.047 50V
C238	1-163-035-00	s	CERAMIC CHIP 0.047 50V

Ref.No.	Parts No.	SP	Description
C239	1-163-035-00	s	CERAMIC CHIP 0.047 50V
C240	1-163-035-00	s	CERAMIC CHIP 0.047 50V
C241	1-163-035-00	s	CERAMIC CHIP 0.047 50V
C243	1-107-211-00	s	SILVERD MICA 24PF 5% 50V
C244	1-163-035-00	s	CERAMIC CHIP 0.047 50V
DL101	1-415-404-11	s	113ns(4.43MHz)
DL201	1-415-404-11	s	113ns(4.43MHz)
FB101	1-535-178-00	s	
FB201	1-535-178-00	s	
FB202	1-535-178-00	s	
FB203	1-535-178-00	s	
FB204	1-535-178-00	s	
FB205	1-535-178-00	s	
FB206	1-535-178-00	s	
FL201	1-235-476-11	s	BPF
IC1	8-743-938-90	s	BX389(SONY)
IC101	8-752-201-30	s	CX22013(SONY)
IC102	8-743-938-90	s	BX389(SONY)
IC201	8-743-938-90	s	BX389(SONY)
IC202	8-743-938-90	s	BX389(SONY)
IC203	8-743-938-90	s	BX389(SONY)
Q1	8-729-271-22	s	2SC2712-G
Q2	8-729-271-22	s	2SC2712-G
Q3	8-729-271-22	s	2SC2712-G
Q101	8-729-271-22	s	2SC2712-G
Q102	8-729-271-22	s	2SC2712-G
Q103	8-729-271-22	s	2SC2712-G
Q201	8-729-271-22	s	2SC2712-G
Q202	8-729-271-22	s	2SC2712-G
Q203	8-729-271-22	s	2SC2712-G
Q204	8-729-271-22	s	2SC2712-G
Q205	8-729-175-73	s	2SC2757
Q206	8-729-175-73	s	2SC2757
Q207	8-729-175-73	s	2SC2757
Q208	8-729-175-73	s	2SC2757
Q209	8-729-122-63	s	2SA1226
Q210	8-729-122-63	s	2SA1226
Q211	8-729-122-63	s	2SA1226
Q212	8-729-122-63	s	2SA1226
Q213	8-729-271-22	s	2SC2712-G
Q214	8-729-175-73	s	2SC2757
Q215	8-729-175-73	s	2SC2757
Q216	8-729-122-63	s	2SA1226
Q217	8-729-122-63	s	2SA1226
Q218	8-729-175-73	s	2SC2757
Q219	8-729-122-63	s	2SA1226

Ref.No.	Parts No.	SP	Description
Q220	8-729-122-63	s	2SA1226
Q221	8-729-175-73	s	2SC2757
Q222	8-729-175-73	s	2SC2757
Q223	8-729-122-63	s	2SA1226
Q224	8-729-271-22	s	2SC2712-G
Q225	8-729-271-22	s	2SC2712-G
RV1	1-228-887-00	s	VAR,METAL GLAZE 470
RV101	1-228-891-00	s	VAR,METAL GLAZE 10k
RV201	1-228-887-00	s	VAR,METAL GLAZE 470
RV202	1-228-887-00	s	VAR,METAL GLAZE 470
RV203	1-228-887-00	s	VAR,METAL GLAZE 470
RV204	1-228-889-00	s	VAR,METAL GLAZE 2.2k
RV205	1-228-888-00	s	VAR,METAL GLAZE 1k
RV206	1-228-887-00	s	VAR,METAL GLAZE 470
RV207	1-228-887-00	s	VAR,METAL GLAZE 470
RV208	1-228-887-00	s	VAR,METAL GLAZE 470
S201	1-554-076-00	s	SLIDE "PROCESS"

YD-17 BOARD

* A-6711-596-A o MOUNTED CIRCUIT BOARD,YD-17
(S/N:up to 10390)

* A-6711-596-B o MOUNTED CIRCUIT BOARD,YD-17
(S/N:10391 and higher)
This board includes the FL-36 board.

C3	1-161-013-00	s	CERAMIC 0.01 10% 25V
C4	1-161-013-00	s	CERAMIC 0.01 10% 25V
C12	1-130-483-00	s	MYLAR 0.01 5% 50V
C15	1-130-478-00	s	MYLAR 0.0039 5% 50V
C16	1-130-477-00	s	MYLAR 0.0033 5% 50V
C17	1-130-474-00	s	MYLAR 0.0018 5% 50V
C20	1-130-483-00	s	MYLAR 0.01 5% 50V
C22	1-130-483-00	s	MYLAR 0.01 5% 50V
C23	1-130-483-00	s	MYLAR 0.01 5% 50V
C29	1-130-483-00	s	MYLAR 0.01 5% 50V
C31	1-130-483-00	s	MYLAR 0.01 5% 50V
C34	1-107-159-00	s	MICA 33PF 5% 500V
C35	1-130-483-00	s	MYLAR 0.01 5% 50V
C36	1-107-157-00	s	SILVERD MICA 27PF 5% 500V
*C37	1-109-560-00	s	MICA 910PF 5% 100V (S/N:up to 10390)
C38	1-124-486-00	s	ELECT 1000 20% 16V
C41	1-130-483-00	s	MYLAR 0.01 5% 50V
C43	1-130-483-00	s	MYLAR 0.01 5% 50V
C45	1-130-483-00	s	MYLAR 0.01 5% 50V
C52	1-130-483-00	s	MYLAR 0.01 5% 50V
C54	1-107-157-00	s	SILVERD MICA 27PF 5% 500V
C56	1-109-689-00	s	MICA 470PF 1% 500V
C59	1-107-109-00	s	SILVERD MICA 1PF 0.5PF 500V
C60	1-107-209-00	s	SILVERD MICA 20PF 5% 500V
C62	1-124-486-00	s	ELECT 1000 20% 16V
C65	1-130-487-00	s	MYLAR 0.022 5% 50V
C70	1-124-486-00	s	ELECT 1000 5% 16V
C71	1-107-026-00	s	SILVERD MICA 5.1PF 0.5PF 500V
C72	1-107-043-00	s	SILVERD MICA 2.7PF 0.5PF 500V
C73	1-107-026-00	s	SILVERD MICA 5.1PF 0.5PF 500V

Ref.No.	Parts No.	SP	Description
C101	1-102-106-00	s	CERAMIC 100PF 10% 50V
C103	1-124-443-00	s	ELECT 100 20% 10V
C104	1-124-443-00	s	ELECT 100 20% 10V
C105	1-124-443-00	s	ELECT 100 20% 10V
C107	1-124-443-00	s	ELECT 100 20% 10V
C108	1-124-443-00	s	ELECT 100 20% 10V
C112	1-107-206-00	s	SILVERD MICA 15PF 5% 500V
C113	1-161-013-00	s	CERAMIC 0.01 10% 25V
C114	1-124-443-00	s	ELECT 100 20% 10V
C117	1-124-443-00	s	ELECT 100 20% 10V
C118	1-124-443-00	s	ELECT 100 20% 10V
C122	1-124-443-00	s	ELECT 100 20% 10V
C124	1-124-443-00	s	ELECT 100 20% 10V
C125	1-124-443-00	s	ELECT 100 20% 10V
C130	1-124-443-00	s	ELECT 100 20% 10V
C132	1-107-207-00	s	SILVERD MICA 16PF 5% 500V
C135	1-161-466-00	s	CERAMIC 390PF 5% 50V
C140	1-124-486-00	s	ELECT 100 20% 10V
C144	1-161-464-00	s	CERAMIC 270PF 5% 50V
C156	1-124-443-00	s	ELECT 100 20% 10V
C161	1-124-443-00	s	ELECT 100 20% 10V
C164	1-124-443-00	s	ELECT 100 20% 10V
C170	1-124-443-00	s	ELECT 100 20% 10V
C172	1-124-443-00	s	ELECT 100 20% 10V
C176	1-107-158-00	s	MICA 30PF 5% 500V
C177	1-124-443-00	s	ELECT 100 20% 10V
C201	1-124-443-00	s	ELECT 100 20% 10V
C202	1-124-443-00	s	ELECT 100 20% 10V
C209	1-130-487-00	s	MYLAR 0.022 5% 50V
C211	1-130-479-00	s	MYLAR 0.0047 5% 50V
C213	1-130-476-00	s	MYLAR 0.0027 5% 50V
C217	1-130-471-00	s	MYLAR 0.001 5% 50V
C223	1-130-487-00	s	MYLAR 0.022 5% 50V
C224	1-130-487-00	s	MYLAR 0.022 5% 50V
C229	1-130-485-00	s	MYLAR 0.015 5% 50V
C231	1-130-483-00	s	MYLAR 0.01 5% 50V
C232	1-124-443-00	s	ELECT 100 20% 10V
C233	1-124-443-00	s	ELECT 100 20% 10V
C238	1-124-472-11	s	ELECT 470 20% 10V
C239	1-124-477-11	s	ELECT 47 20% 25V
C242	1-130-487-00	s	MYLAR 0.022 5% 50V
D3	8-719-911-19	s	1SS119
D4	8-719-911-19	s	1SS119
D101	8-719-911-19	s	1SS119
D102	8-719-911-19	s	1SS119
D203	8-719-911-19	s	1SS119
D204	8-719-911-19	s	1SS119
D205	8-719-911-19	s	1SS119
D206	8-719-911-19	s	1SS119
D207	8-719-911-19	s	1SS119
DL1	1-415-400-11	s	70ns(1.0MHz)
DL2	1-415-400-11	s	70ns(1.0MHz)
DL3	1-415-154-21	s	35ns
DL4	1-415-154-21	s	35ns
DL5	1-415-402-11	s	300ns(1.0MHz)

Ref.No.	Parts No.	SP	Description
DL201	1-415-401-11	s	25ns
DL202	1-415-306-00	s	340ns
FB101	1-535-178-00	s	
FL1	1-235-473-11	s	LPF
FL2	1-235-010-21	s	HPF
*FL3	1-235-478-11	s	HPF
	(S/N:up to 10390)		
FL101	1-235-469-11	s	LPF
FL102	1-235-475-11	s	LPF
FL103	1-235-474-11	s	LPF
IC1	8-759-601-34	s	CX134A(SONY)
IC2	8-752-006-00	s	CX20060(SONY)
IC3	8-741-124-70	s	BX1247(SONY)
IC4	8-752-006-00	s	CX20060(SONY)
IC5	8-741-125-30	s	BX1253(SONY)
IC6	8-741-125-40	s	BX1254(SONY)
IC7	8-759-240-11	s	TC4011BP(TOSHIBA)
IC8	8-741-126-30	s	BX1263(SONY)
IC9	8-752-006-00	s	CX20060(SONY)
IC10	8-741-124-80	s	BX1248(SONY)
IC11	8-741-114-00	s	BX1140(SONY)
IC101	8-751-350-00	s	CX135(SONY)
IC102	8-759-938-90	s	BX389(SONY)
IC103	1-741-124-90	s	BX1249(SONY)
IC104	1-741-124-90	s	BX1249(SONY)
IC105	8-743-949-00	s	BX3949(SONY)
IC106	8-759-990-82	s	TL082CP(TI)
IC107	8-752-006-00	s	CX20060(SONY)
IC108	8-759-201-69	s	TL8608P(TOSHIBA)
IC109	8-759-178-08	s	uPC78L08(NEC)
IC110	8-741-126-60	s	BX1266(SONY)
IC111	8-741-126-70	s	BX1267(SONY)
IC201	8-759-270-60	s	TA7060AP(TOSHIBA)
IC202	8-741-125-60	s	BX1256(SONY)
IC203	8-759-969-13	s	SN16913P(TI)
IC204	8-752-201-30	s	CX22013(SONY)
IC205	8-759-938-90	s	BX389(SONY)
IC206	8-759-270-76	s	TA7076P(TOSHIBA)
L2	1-407-504-00	s	10mH
L3	1-407-504-00	s	10mH
L6	1-407-211-XX	s	27mH
L13	1-408-654-00	s	1mH
LV1	1-407-268-00	s	1.5mH
LV2	1-407-569-00	s	10uH
LV101	1-407-572-00	s	33uH
LV102	1-407-570-00	s	15uH
LV103	1-407-570-00	s	15uH

Ref.No.	Parts No.	SP	Description
Q1	8-729-603-50	s	2SC403SP
Q2	8-729-600-27	s	2SC634SP
Q3	8-729-603-50	s	2SC403SP
Q4	8-729-603-50	s	2SC403SP
Q5	8-729-600-27	s	2SC634SP
Q6	8-729-600-27	s	2SC634SP
Q7	8-729-603-50	s	2SC403SP
Q8	8-729-603-50	s	2SC403SP
Q9	8-729-603-50	s	2SC403SP
Q10	8-729-603-50	s	2SC403SP
Q11	8-729-603-50	s	2SC403SP
Q12	8-729-600-27	s	2SC634SP
Q13	8-729-201-05	s	2SC2878-B
Q15	8-729-603-50	s	2SC403SP
Q16	8-729-603-50	s	2SC403SP
Q17	8-729-603-50	s	2SC403SP
Q18	8-729-201-05	s	2SC2878-B
Q19	8-729-201-05	s	2SC2878-B
Q20	8-729-603-50	s	2SC403SP
Q101	8-729-201-05	s	2SC2878-B
Q102	8-729-603-50	s	2SC403SP
Q103	8-729-201-05	s	2SC2878-B
Q104	8-729-603-50	s	2SC403SP
Q105	8-729-603-50	s	2SC403SP
Q106	8-729-603-50	s	2SC403SP
Q107	8-729-603-50	s	2SC403SP
Q108	8-729-612-77	s	2SA1027R
Q109	8-729-603-50	s	2SC403SP
Q110	8-729-600-27	s	2SC634SP
Q111	8-729-603-50	s	2SC403SP
Q112	8-729-612-77	s	2SA1027R
Q113	8-729-600-27	s	2SC634SP
Q114	8-729-612-77	s	2SA1027R
Q201	8-729-612-77	s	2SA1027R
Q202	8-729-603-50	s	2SC403SP
Q203	8-729-603-50	s	2SC403SP
Q204	8-729-603-50	s	2SC403SP
Q206	8-729-603-50	s	2SC403SP
Q207	8-729-612-77	s	2SA1027R
Q208	8-729-603-50	s	2SC403SP
Q210	8-729-603-50	s	2SC403SP
Q211	8-729-603-50	s	2SC403SP
Q212	8-729-603-50	s	2SC403SP
R1	1-215-438-00	s	METAL 5.1k 1% 1/6W
R32	1-215-418-00	s	METAL 750 1% 1/6W
R38	1-215-438-00	s	METAL 5.1k 1% 1/6W
R39	1-215-462-00	s	METAL 51k 1% 1/6W
R69	1-215-428-00	s	METAL 2k 1% 1/6W
R70	1-215-434-00	s	METAL 3.6k 1% 1/6W
R71	1-215-424-00	s	METAL 1.3k 1% 1/6W
R72	1-215-408-00	s	METAL 300 1% 1/6W
R77	1-214-680-41	s	METAL 9.1 1% 1/4W
R78	1-214-680-41	s	METAL 9.1 1% 1/4W
R101	1-215-414-00	s	METAL 510 1% 1/6W
R103	1-215-414-00	s	METAL 510 1% 1/6W
R108	1-215-454-00	s	METAL 24k 1% 1/6W
R109	1-215-448-00	s	METAL 13k 1% 1/6W

Ref.No.	Parts No.	SP	Description
R111	1-215-420-00	s	METAL 910 1% 1/6W
R113	1-215-414-00	s	METAL 510 1% 1/6W
R114	1-215-414-00	s	METAL 510 1% 1/6W
R120	1-215-421-00	s	METAL 1k 1% 1/6W
R121	1-215-421-00	s	METAL 1k 1% 1/6W
R122	1-215-421-00	s	METAL 1k 1% 1/6W
R133	1-215-454-00	s	METAL 24k 1% 1/6W
R156	1-215-456-00	s	METAL 30k 1% 1/6W
R177	1-215-420-00	s	METAL 910 1% 1/6W
R234	1-215-410-00	s	METAL 360 1% 1/6W
R241	1-215-452-00	s	METAL 20k 1% 1/6W
R246	1-215-394-00	s	METAL 75 1% 1/6W
RV1	1-228-888-00	s	VAR,METAL GLAZE 1k
*RV2	1-228-459-00	s	VAR,CERMET 10k (S/N;10391 and higher)
*RV3	1-228-459-00	s	VAR,CERMET 10k (S/N;10391 and higher)
RV5	1-228-889-00	s	VAR,METAL GLAZE 2.2k
RV8	1-228-889-00	s	VAR,METAL GLAZE 2.2k
RV9	1-228-889-00	s	VAR,METAL GLAZE 2.2k
*RV10	1-228-889-00	s	VAR,METAL GLAZE 2.2k (S/N:up to 10390)
*RV11	1-228-889-00	s	VAR,METAL GLAZE 2.2k (S/N:up to 10390)
RV12	1-224-939-00	s	VAR,METAL 5k
RV13	1-224-941-00	s	VAR,METAL 20k
RV102	1-224-936-00	s	VAR,METAL 500
RV103	1-224-937-00	s	VAR,METAL 1k
RV104	1-228-889-00	s	VAR,METAL GLAZE 2.2k
RV105	1-224-940-00	s	VAR,METAL 10k
RV106	1-224-937-00	s	VAR,METAL 1k
RV107	1-228-896-00	s	VAR,METAL GLAZE 220k
RV108	1-228-895-00	s	VAR,METAL GLAZE 100k
RV109	1-224-937-00	s	VAR,METAL 1k
RV201	1-224-939-00	s	VAR,METAL 5k
RV203	1-228-888-00	s	VAR,METAL GLAZE 1k
RV204	1-228-889-00	s	VAR,METAL GLAZE 2.2k
RV205	1-228-889-00	s	VAR,METAL GLAZE 2.2k
RV206	1-228-892-00	s	VAR,METAL GLAZE 22k
RV207	1-224-941-00	s	VAR,METAL 20k
S101	1-552-509-00	s	DIP
S201	1-552-509-00	s	DIP "NORMAL/SP"
TH1	1-800-202-XX	s	S-10K
X101	1-567-405-11	s	OSC, 5.316MHz

Ref.No.	Parts No.	SP	Description
FRAME			
	A-6742-034-A	s	DETECTOR(T)ASSY (WITH PH-1A,LE-4A)
	1-806-232-21	s	DETECTOR MB-1102/S.N
	A-6742-036-B	s	DETECTOR(S)ASSY (WITH PH-1B,LE-4B)
	1-806-232-21	s	DETECTOR MB-1102/S.N
	1-555-698-00	o	FLAT 40 CORE(SY-37 TO KY-9)
	1-555-699-00	o	FLAT(MB-8 TO MB-9)
⚠	1-534-698-xx	s	CORD POWER
⚠ CN100	1-508-680-11	o	PLUG HOUSING,6P
	1-535-071-11	o	CONTACT
	1-508-683-11	o	RECEPTACLE,6P
	1-535-072-11	o	CONTACT
CN201	1-561-781-21	s	BNC,"VIDEO OUT-1"
CN202	1-561-781-21	s	BNC,"VIDEO OUT-2"
CN203	1-561-781-21	s	BNC,"RF OUT (OFF TAPE)"
CN204	1-509-176-00	s	XLR,3P(M) "AUDIO CH-1/L OUT"
CN205	1-509-176-00	s	XLR,3P(M) "AUDIO CH-2/R OUT"
CN206	1-509-176-00	s	XLR,3P(M) "AUDIO MONITOR OUT"
CN207	1-509-095-00	s	8P MULTI "MONITOR"
CN208	1-561-045-00	s	7P(F) "DUB OUT"
CN209	1-508-945-00	s	7P(M) "DUB IN"
CN210	1-509-471-00	s	18P(F) "TBC"
CN211	1-561-781-21	s	BNC,"SC IN"
CN212	1-561-781-21	s	BNC,"VIDEO 1 IN"
CN213	1-561-781-21	s	BNC,"VIDEO 2 IN"
CN214	1-561-781-21	s	BNC,"EXT SYNC IN"
CN215	1-561-781-21	s	BNC,"TIME CODE IN"
	1-561-781-21	s	BNC,"TIME CODE OUT"
CN216	1-509-184-00	s	XLR, 3P(F) "AUDIO CH-1/L IN"
CN217	1-509-184-00	s	XLR, 3P(F) "AUDIO CH-2/R IN"
⚠ CN221	1-509-546-00	s	3P AC INLET
CN222	1-526-572-00	s	VOLTAGE SELECTOR
CS201	1-586-633-00		CONDENSATION SENSOR
DME201	8-745-203-00		DM203 CAPSTAN
H201	8-829-358-00	s	EPP150-5803 "AUDIO/CTL"
H202	8-829-371-11	s	PP171-5802D "TIME CODE R/P"
H203	8-825-544-10	s	EF232-58 "FULL ERASE"
H204	A-6709-500-A	s	UPPER DRUM ASS'Y(DUR-32-R)

Ref.No.	Parts No.	SP	Description
M201	1-541-264-11	s	DC FAN
M202	8-835-056-01	s	THREADING(DNR-1002A)
M203	A-6709-498-A	s	HEAD DRUM ASSY(DUH-32A-R)
M204	8-838-019-01	s	CAPSTAN(BHF-1600A)
M205	8-835-050-01	s	T-REEL(MNR-4400A)
M206	8-835-050-01	s	S-REEL(MNR-4400A)
M207	8-835-055-01	s	CASSETTE COMPARTMENT(DNR-4700A)
*M208	1-541-209-11	s	DC FAN
	(S/N:10391 and higher)		
ME201	1-520-438-00	s	"VIDEO/RF"
ME202	1-520-439-00	s	"AUDIO CH-1"
ME203	1-520-439-00	s	"AUDIO CH-2"
PL201	1-518-259-00	s	5V 60mA "VIDEO/RF"
PL202	1-518-259-00	s	5V 60mA "VIDEO/RF"
PL203	1-518-461-00	s	14V 50mA "AUDIO CH-1"
PL204	1-518-461-00	s	14V 50mA "AUDIO CH-1"
PL205	1-518-461-00	s	14V 50mA "AUDIO CH-2"
PL206	1-518-461-00	s	14V 50mA "AUDIO CH-2"
PL207	1-518-259-00	s	5V 60mA "CASSETTE COMPARTMENT"
PL208	1-518-259-00	s	5V 60mA "CASSETTE COMPARTMENT"
PL209	1-518-259-00	s	5V 60mA "CASSETTE COMPARTMENT"
PM201	1-454-279-00	s	12.4V 11OHM "S TENSION"
PM202	1-454-278-00	s	11.3V 21OHM "SKEW"
PM203	1-454-278-00	s	11.3V 21OHM "T-REEL BRAKE"
PM204	1-454-278-00	s	11.3V 21OHM "S-REEL BRAKE"
PM206	1-454-276-00	s	12V 40OHM "PINCH"
RV201	1-226-616-00	s	VAR,100k "TRACKING"
RV202	1-224-691-XX	s	VAR,10k "VIDEO LEVEL"
RV203	1-228-140-00	s	VAR,20k/20k "AUDIO LEVEL(CH-1)"
RV204	1-228-140-00	s	VAR,20k/20k "AUDIO LEVEL(CH-2)"
⚠S201	1-570-117-31	s	ROCKER "POWER"
S202	1-570-028-11	s	MICRO "SP"
S203	1-514-524-00	s	SLIDE "DOLBY"
TM201	1-548-141-41	s	HOURS METER
	1-526-829-31	s	SOKET,METER

19-4. PACKING MATERIAL AND ACCESSORY (SUPPLIED)

Parts No.	SP	Description
A-6724-244-A	s	EX-7 ASSY
1-561-654-00	o	CONNECTOR, CARD 86P
2-251-622-00	o	LEVER, PC BOARD
⚠ 1-556-760-11	s	CORD, POWER (3 CORE)
3-668-443-04	o	CUSHION (UPPER)
3-668-444-00	o	SPACER
3-683-615-03	o	CUSHION (FRONT), LOWER
3-683-616-03	o	CUSHION (REAR), LOWER
3-688-812-01	o	PARTITION
3-688-843-01	o	INDIVIDUAL CARTON
3-701-630-00	s	BAG, POLY (FOR EX-7 ASSY)
3-701-632-01	s	BAG, POLY (FOR MANUAL)
3-701-649-01	s	BAG, POLY (FOR BVU-850P)

19-5. FIXTURE

Parts No.	SP	Description
J-6001-820-A	s	DRUM ECCENTRICITY GAUGE (3)
J-6001-830-A	s	DRUM ECCENTRICITY GAUGE (2)
J-6001-840-A	s	DRUM ECCENTRICITY GAUGE (1)
J-6001-930-A	s	DRUM ECCENTRICITY GAUGE (4)
J-6002-290-A	s	DIHEDRAL ADJUSTING SCREW
J-6009-830-A	s	FLATNESS PLATE
J-6130-010-A	s	REEL TABLE HEIGHT CHECK BASE JIG
J-6130-020-A	s	REEL TABLE HEIGHT CHECK JIG
J-6150-020-A	s	PINCH LEVER ADJUSTMENT JIG
J-6150-960-A	s	REEL MOTOR SHAFT SLANTNESS CHECK JIG
Y-2031-001-0	s	CLEANING FLUID
2-034-697-00	s	CLEANING PIECE
3-702-215-01	s	TORQUE MEASUREMENT TAPE (100MM DIA.)
3-702-216-01	s	BACK TENSION ADJUSTMENT JIG
7-723-902-01	s	INSPECTION MIRROR (HANDLE)
7-723-902-11	s	INSPECTION MIRROR (MIRROR)
7-732-050-30	s	TENSION SCALE (100G FULL SCALE)
7-732-050-40	s	TENSION SCALE (200G FULL SCALE)
7-662-001-62	s	SONY GREASE, SGL-501
	s	ALIGNMENT TAPE
9-911-053-00	s	THICKNESS GAUGE
Standard Products	s	HEAD DEMAGNETIZER (HE-4)

VIDEOCASSETTE RECORDER

BVU-850P

Service Engineering Department
Communication Products Group
Sony Corporation

4-14-1, Asahi-cho, Atsugi-shi,
Kanagawa-ken, 243 Japan
Telephone: (0462)30-5404
Telex: J22262

TABLE OF CONTENTS

Section 1. Outline
Section 2. Video Circuit
Section 3. Audio Circuit
Section 4. Servo Control System
Section 5. Reel Servo System
Section 6. Color Framing
Section 7. System Control
Section 8. Switching Regulator
Section 9. Signal Description
Section 10. Dolby Noise Reduction
Section 11. Time Code
Section 12. ϕ^2 Servo System
Section 13. Measuring Video Signal
Section 14. Alignment Procedure

SECTION 1

OUTLINE

SECTION 1
OUTLINE

The BVU-850P is an updated version of the BVU-800. This unit is mainly characterized by an improved picture and better sound quality. The BVU-850P is compared with the BVU-800 and along with its additional features is described below.

<What is SP the format?>

1. Increased Luminance Carrier Frequency

(PAL: 0.8 MHz up

same deviation 1.6MHz

2. SP Tape

The SP mode is activated only when the SP tape is loaded in SP U-matic VTRs. New SP tape has an increased high frequency response.

KSP-60
KSP-30
KSP-S20
KSP-S10
] Exfactory is scheduled for July, 1985.

SP format

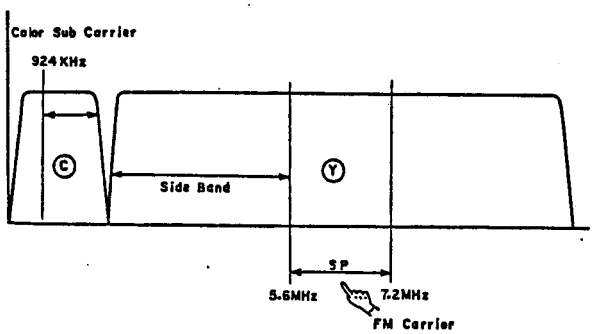

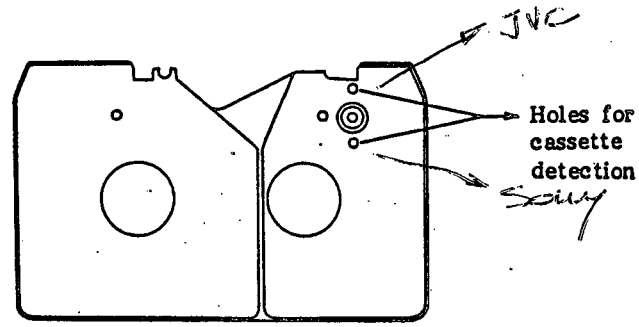

Conventional format

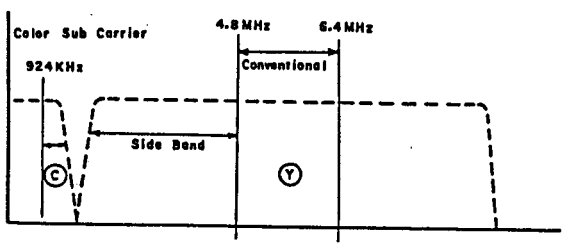

3. Complete Interchangeability

SP and conventional U-matics provide complete interchangeability between the different combinations of tape (conventional or SP) and VTR (conventional or SP) as follows.

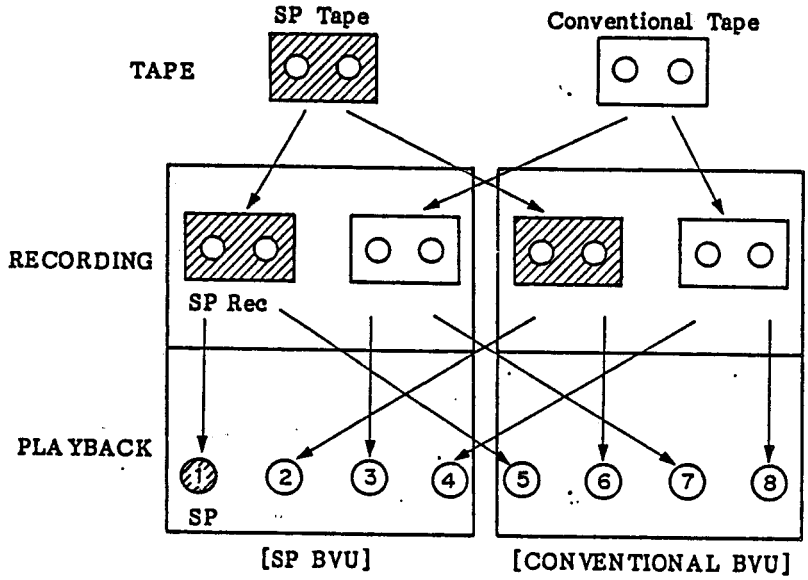

	(1)	(2)	(3)	(4)	(5)	(6)	(7)	(8)
Y Frequency response (resolution)	***				*			
Y ringing	***		**		*		*	
Chroma Frequency response (blurring)	***		**		*			
Chroma ringing	***	*	**	*	*			

* improved
** much improved
*** very much improved

<Main Features>

1. High Quality Video

The target of SP U-matics was to improve the picture quality of the 3rd generation to equal that of 1st generation conventional U-matics which comply with NTSC standards. This target was duly achieved by adopting the following technologies together with the BVT-810 series TBC.

a. SP format (See page)

- provides higher luminance resolution
- improves luminance signal ringing
- provides higher chroma resolution
- improves chrominance blurring
- improves chrominance ringing
- improves chrominance S/N ratio using BVT-810

* Automatic detection system for SP & conventional modes

The BVU-850/870 provide either SP or conventional recording.

In the REC mode, the machine mechanically distinguishes between an SP tape or conventinal tape by the holes in the SP tape. Full SP performance is obtained only when the SP tape is applied as shown on pages and . In the PB mode, the machine electrically distinguishes between SP or conventional formats through carrier frequency detection.

Owing to the above mechanical and electrical automatic detection systems, there should be no operational confusion between SP and conventional modes.

The SP orange lamp on the control panel indicates whether the VTR is in the SP mode.

b. New improved circuits

- New Y/C separater (3 line comb filter for NTSC, PAL correlater for PAL) ==> improves luminance ringing and resolution
- Chroma enhancer ==> improves chrominance blurring
- New noise canceller system ==> improves K-factor
- New spurious noise canceller ==> improves spurious noise
- CCD based D.O.C., High speed automatic chroma controller, Linear phase amplifier in RF, etc.

2. High Quality Audio

a. New sendast head

Frequency response is extended to 15kHz ±3dB, and an S/N ratio of better than 52dB is ensured by the adoption of the new sendast head.

b. Dolby Type C Noise Reducer in Rec/PB mode

Dolby Type C noise reducer is employed, which achieves 69dB of audio S/N, ~~WOW~~!

c. Dolby Auto Detector

In the REC mode, the Dolby switch may be activated manually. During recording, the Dolby pilot signal is recorded on the audio channel. (The pilot signal —1/2 CTL: 15Hz(NTSC), 12.5Hz(PAL)—is created by dividing the CTL signal.)

Then, in the PB mode, this pilot signal is automatically detected after being compared with CTL, be for Dolby PB circuitry can be activated.

The Dolby green lamp on the control panel indicates whether Dolby NR is on or off.

d. Appropriate audio Rec level for SP & Conventional tapes

Appropriate audio recording level for SP and conventional tapes may be provided by the automatic detection system.

DOLBY AUTO DETECTOR
BLOCK DIAGRAM

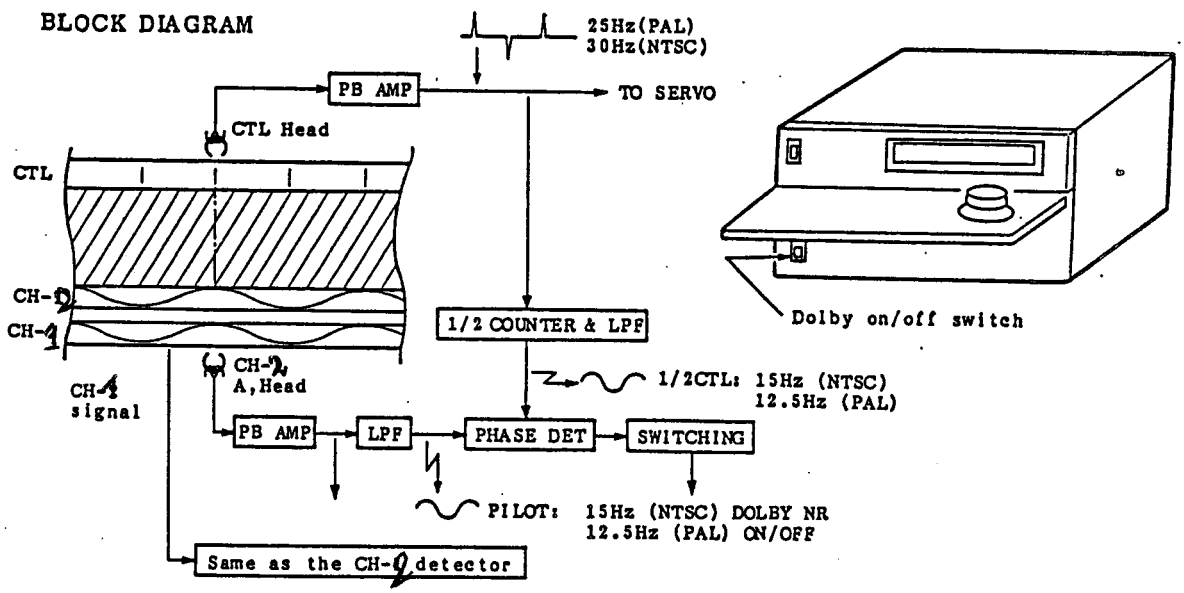

3. Audio Editing In-Point Improvement

Audio erase head is activated approximately three frames prior to the audio record head, to ensure smooth audio editing.

4. Mechanical Improvements

In addition to SP/Dolby indicators and switches, the following improvements have been added:

a. Highly precise positioning of time code head

Due to a mechanical design improvement, the time code head position is precisely adjusted during the production process. This also contributes to simple service/maintenance activities.

b. Time code in/out connectors ==> BNC connectors

c. Impact error improvement

Errors caused by the impact between the tape and head are prevented by adopting the special "I" head chip on the drum.

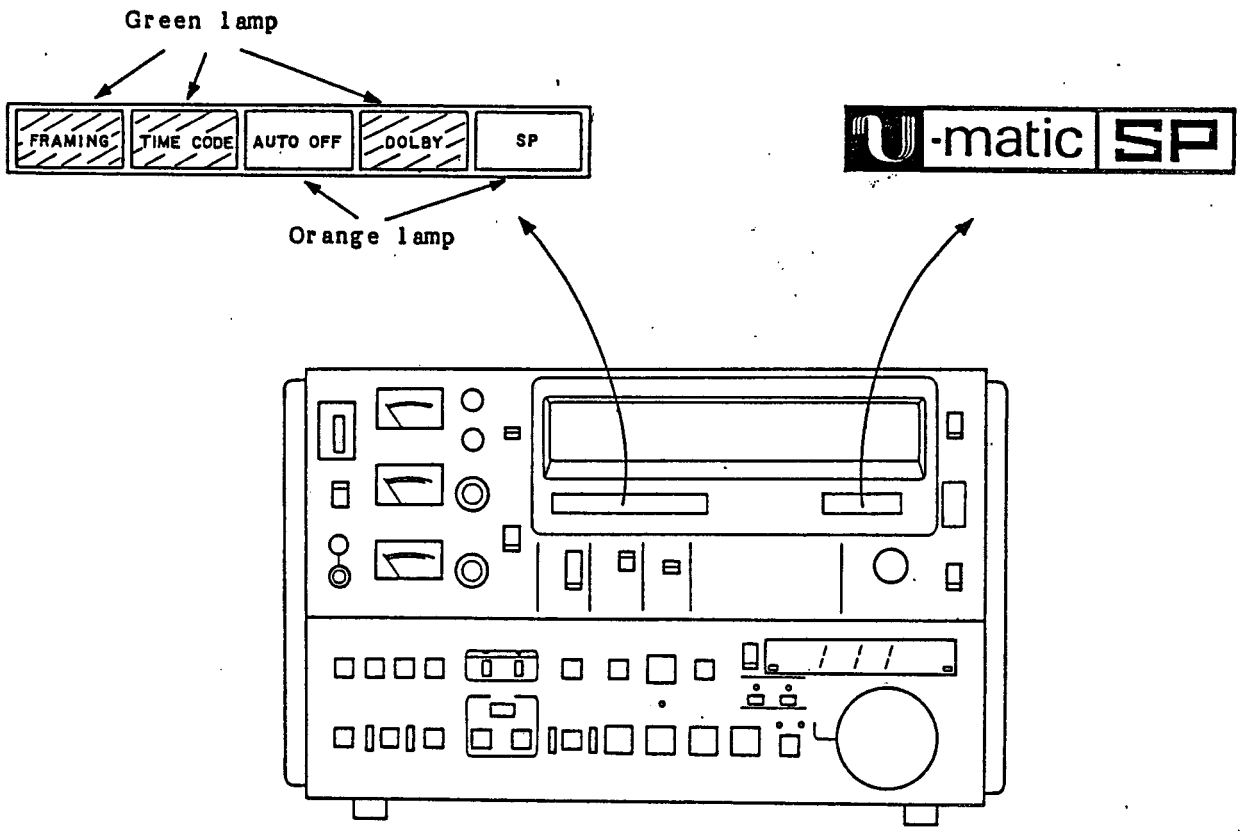

BVU-850 Series

Other Features

1. Easy editing operations are enabled due to an improved tape transport mechanism. Moreover, in the SEARCH, FF and REW modes, 10 times the normal speed (max.) in both the forward and reverse directions are possible even when the tape is being threaded. This shortens the search time for an edit point. The fast forward operation takes 4 minutes and the rewinding operation 2.5 minutes. Dial operations enable stable and color playback pictures to be displayed on the monitor in the SEARCH mode at 10 times the normal speed (max.) in both the forward and reverse directions. In the STOP mode, a clear still picture can be obtained by operating the stop servo circuit and moving the noise bar into the upper and lower portions of the screen. The SHUTTLE mode is 9 times the normal speed in the forward and reverse directions.

2. To increase reliability, a photointerrupter, consisting of a photosensor and a light-emitting diode (LED), is used instead of conventional micro switches and relays. Moreover, two relays are used for audio erase control and one relay for the power supply. The friction coefficient between the tape and mechanism is reduced to stabilize tape transport. As a result, tape transport in the reverse direction is stabilized. All tape guide rollers used soften the sharp bending angle of the tape. Moreover, 6 DC motors are used, and a brushless DC motor is used for the capstan.

The BVU-200 detects and controls the tape tension using a mechanical servo circuit. However, the BVU-850P employs an electrical servo circuit which electrically detects tape tension and DC-controls the reel motor. Therefore, stable operations are obtained but are limited by the passage of time and environmental changes.

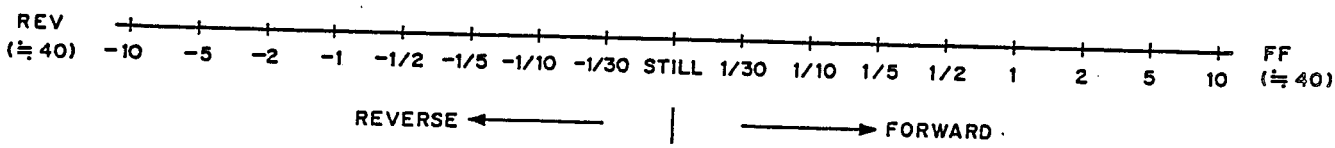

3. SEARCH dial

Using the SEARCH dial on the front panel, the tape can be run at 1/30, 1/10, 1/5, 1/2, 1, 2, 5 and 10 times its normal speed in both the forward and reverse directions. Consequently, the beginning of an edit point can be rapidly located.

4. Automatic editing functions

The BVU-850P incorporates fully-automatic editing functions on the front panel. When two BVU-850Ps are connected, editing can be automatically performed. The built-in editing functions are: AUTO EDIT, PRE-VIEW, REVIEW, ENTRY, IN, OUT, TRIM, PREROLL, ASSEMBLE, INSERT, etc. Moreover, when the BVE-800 editing machine is connected to the BVU-850P, various automatic editing functions can be obtained.

5. High-editing precision

In addition to the fine still picture function using the stop servo circuit, ± 2-frame editing precision can be obtained by reducing the pinch ON/OFF operation in the automatic editing mode. In the PAUSE mode, the CTL head is stopped in the middle of the two CTL pulses by the stop servo circuit.

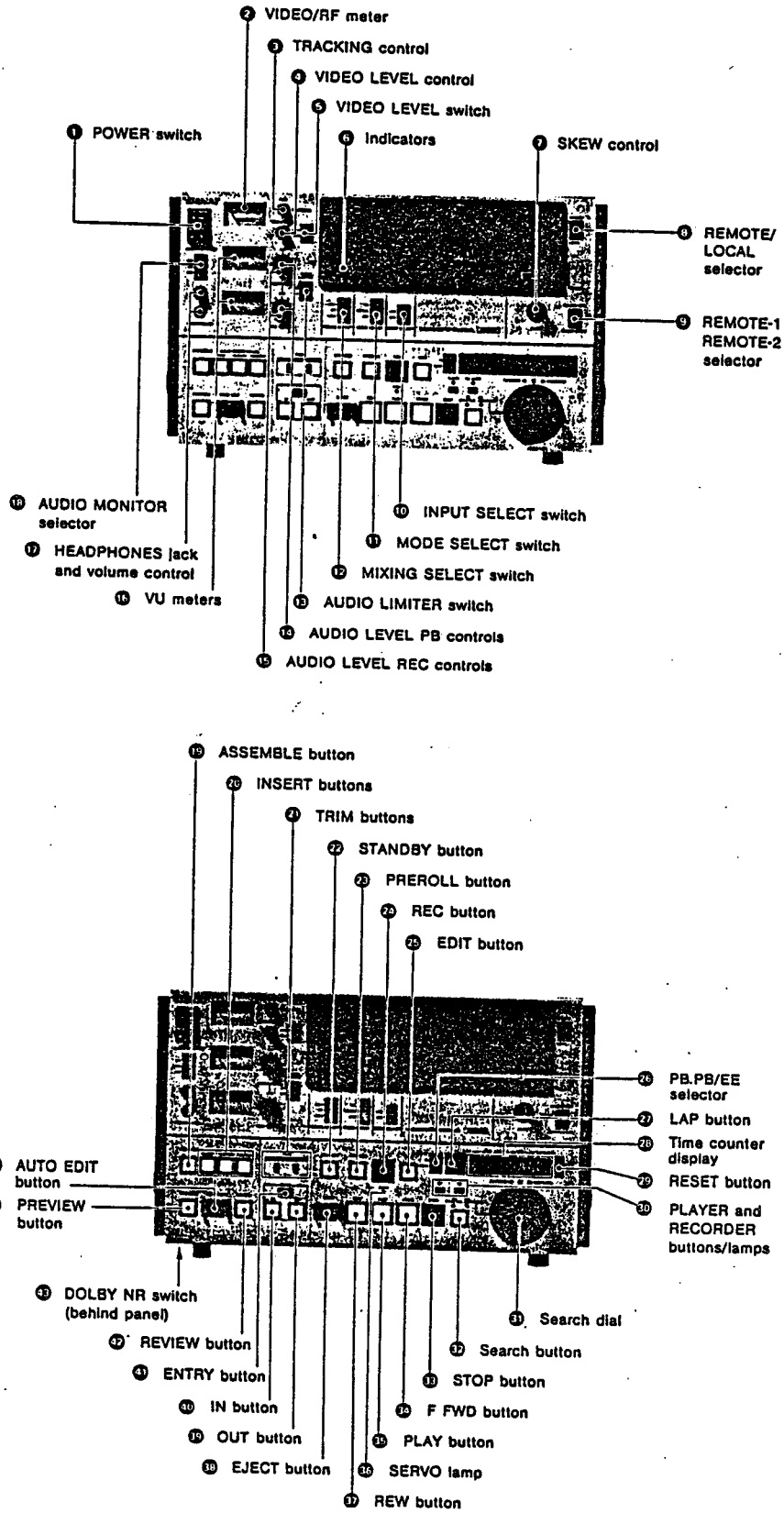

External View of Operation Panel and Remote Controller

6. Phi square servo

The phi square servo circuit has two phase servo loops. The input and playback video signal phases are made the same by using one of the above phase servo loops. As a result, flagging (horizontal time base error) at an edit point is eliminated.

7. Framing servo

The V sync signal in the odd field is recorded as a CTL signal to perform CUT-IN and CUT-OUT in the odd and even fields, respectively.

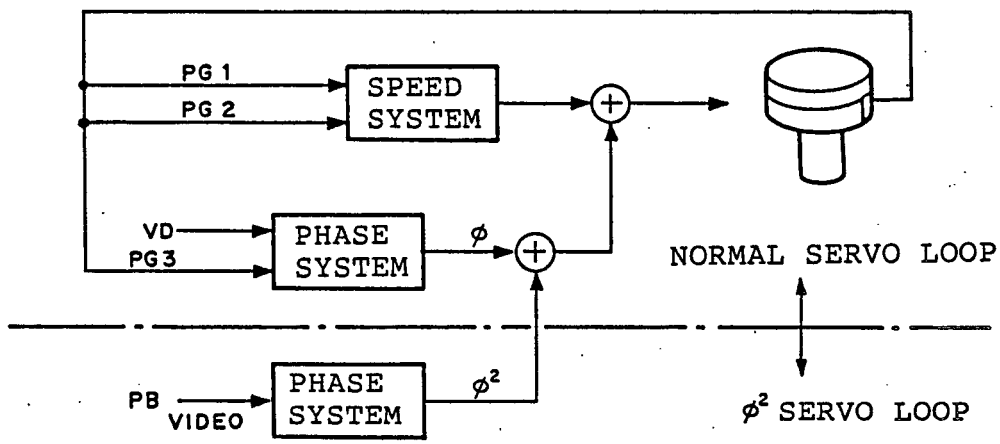

Simplified Block Diagram of Phi Square Servo Circuit

8. Low-power consumption is possible, and the allowable power voltage and frequency ranges are wide. Selecting between 100V/120V/220V/240V±10% is performed by using the voltage select switch. A frequency of 48 to 64Hz and a power consumption of 15W are obtained using a switching regulator.

9. Digital servo

Using silicon monolithic integrated-injection logic (I^2L) IC CX-194A, most of the servo circuits are digitally controlled to stabilize their performance. This IC element number consists of 3500 gates and 300 elements (analog).

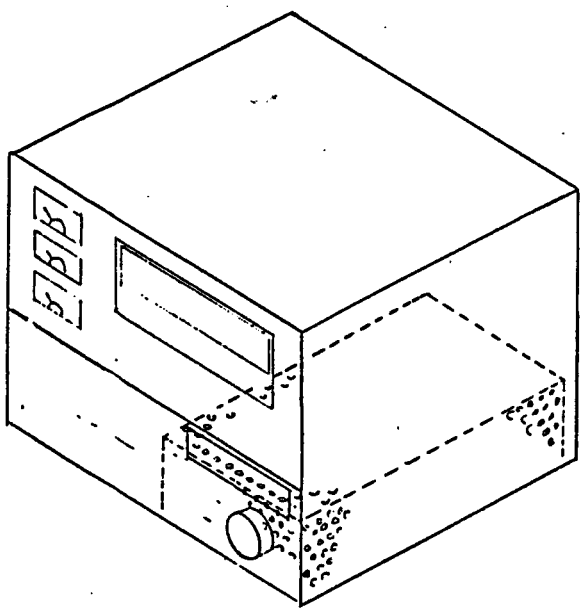

External view of switching power block

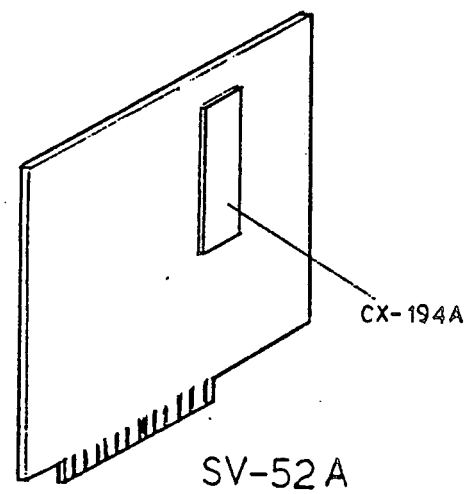

External view of CX-194A and servo board

10. Skew control

A new skew mechanism combined with a search plunger is employed. The skew position is set to OFF in the search mode. When the search operation is completed, the skew is automatically returned to a previously set position.

11. LED display tape counter

A time display using a CTL pulse is employed instead of the usual mechanical tape counter.

12. Long PAUSE

When the PAUSE mode exceeds 8 minutes, the tape tension is automatically slackened to prevent damage to the tape.

13. New system control

Use of Z80 microprocessor software enables stable system control.

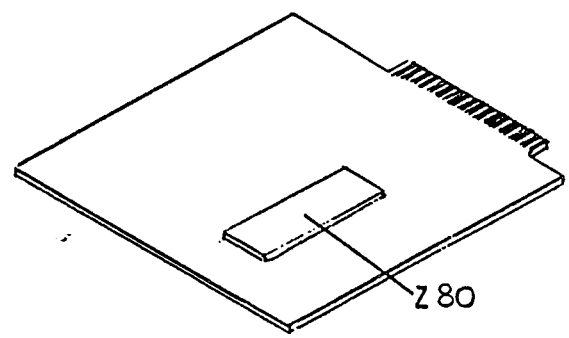

SY-37A

External view of Z80 CPU and system control board

14. High reliability

• Motor

A direct drive system is employed for drum, capstan and reel driving. A BSL motor is used for capstan motor driving due to its exceptional durability.

• Reel servo

The reel tables are directly driven by a DC motor which is used exclusively for supply and take-up reels. Conventional models employ a mechanical brake. However, the BVU-850P provided with a tape tension detector (CDS) accurately controls tape tension by electrically operating the reel servo circuit.

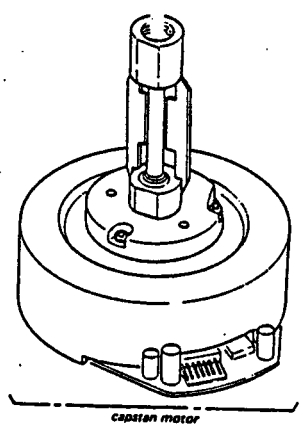

External view of capstan motor

- Micro switches are obsolesced and the number of relays are reduced.

  To increase reliability, a photointerrupter consisting of the LED and photodiode is used instead of a micro switch. Signal recording/ playback selection is performed by an electronic switch without using relays. However, two relays are used to turn on or off the audio erase head, and one relay for the power supply.

- Lamp

  To detect the top and end of a tape, an LED lamp is used instead of a conventional lamp. As a result of this, the long life and high reliability of the tape is guaranteed.

- Belts

  Only two rubber belts are employed. One transmits the threading motor torque and the other the cassette compartment motor torque. The major caution concerning these rubber belts is that they should not be broken. Minimal use of these rubber belts improve reliability and facilitate maintenance.

SPECIFICATIONS <BVU-850P>

GENERAL

Weight 38kg

Dimensions
454 x 283 x 550mm

Power requirements
AC 100/120/220/240V
±10% (selectable)
48 to 64Hz

Power consumption
135W
180W (w/accessories)

Operating temperature
+5 C to 40 C

Storage temperature
-20 C to 60 C

Tape transport mechanism
U-matic system
(3/4 inch KCA, KCS, KSP, KSP-S cassettes)

Tape speed
9.53cm/s

Wow/flutter
0.25%(DIN)

Record/playback time
60 min, maximum with KSP-60/KCA-60

Fast forward time
Less than 4 min, with KSP-60/KCA-60

Rewind time
Less than 2.5 min, with KSP-60/KCA-60

Search speed
SHUTTLE:
Still, 1/30, 1/10, 1/5, 1/2, 1, 2, 5 and 10 times normal speed in forward and reverse directions
JOG: Still to 1 in forward and reverse directions

(BVU-870P only)
DT (VAR position):
Normal speed in reverse direction to 3 times the normal speed in forward direction (noiseless playback is possible.)

VIDEO

Video recording system
Luminance: FM

Chroma: SC low-range conversion

Input PAL composite video, sync negative, 1.0Vp-p ±0.3V, 75ohms, unbalanced

Output PAL composite video sync negative, 1.0Vp-p ±0.2V, 75ohms, unbalanced

Dubbing input
Luminance: 0.5Vp-p
Sync negative,
Impedance: 75ohms ±10%

Chroma signal: 0.5Vp-p
Impedance: 75ohms ±10%

Dubbing output
Luminance: 0.5Vp-p
Sync negative
Impedance: 75ohms ±10%

Chroma signal: 0.5Vp-p
Impedance: 75ohms ±10%

Horizontal resolution
SP mode
300 lines (monochrome/color mode)

Conventional mode
260 lines (monochrome/color mode)

Signal to noise ratio
SP mode
More than 46dB (color mode)
More than 49dB (Y)
More than 46dB (AM)
More than 41dB (PM)

Conventional mode
More than 46dB (color mode)

(SP mode only)

K-factor (2T pulse)	Less than 3%
DG	Less than 3%
DP	Less than 3
Y/C delay	Less than 25ns

AUDIO

Input (MIC)
-60dB, 3 k-ohms, balanced

(LINE)
+4dB, 10 k-ohms/600ohms balanced

Output (LINE)
+4dB, low impedance, balanced

(HEADPHONE)
-46 to -26dB, 8ohnm load, binaural

(MONITOR)
+4dB, 600ohm load, balanced

Distortion
Less than 2.0%

Frequency response
SP mode
50Hz to 15kHz ± 3dB

Conventional mode
50Hz to 15kHz ± 4dB

Signal to noise ratio
SP mode
More than 52dB
(at 3% distortion level, without the audio NR)

Conventional mode
48dB (at 3% distortion level)

TIME CODE INPUT

0dB ± 6dB, 10 k-ohms, unbalanced
(0dB = 1.55Vp-p pulse)

TIME CODE OUTPUT

0dB + 3dB, low impedance unbalanced
(0dB = 1.55Vp-p pulse)

SC INPUT

2Vp-p ± 1V, 75ohms, unbalanced

SYNC INPUT

0.2Vp-p to 5Vp-p, negative, 75ohms, unbalanced
(1Vp-p ± 0.2V with VIDEO input)

RF OUTPUT (off tape)

0.5Vp-p ± 0.1V, 75ohms unbalanced

ACCESSORIES

AC power cord	1
Dubbing cable VDC-5	1
Remote control cable (RCC-5G)	1
Extension board EX-7	1
Operation and maintenance manual	2

Measuring Instruments for Training

1.	Signal Generator	TEK 1411 (optional)
2.	Vectorscope	TEK 521A
3.	Waveform Monitor	TEK 1485R
4.	Y/C Phase Measuring Instrument	MS 321A (ANRITSU)
5.	Spectral Analyzer	Frequency Range 100MHz (Max.)
6.	Frequency Counter	Frequency Range 10MHz (Max.) (8 Digit)
7.	Digital Voltmeter	
8.	AC Voltmeter	
9.	Audio Oscillator	
10.	Current Probe	TEK A6302 (Probe) +AM503 (AMP)
11.	Noise Meter	925C (SHIBASOKU)
12.	Noise Signal Generator	TG-7/2(SHIBASOKU)

SECTION 2

VIDEO CIRCUIT

SECTION 2
VIDEO CIRCUIT

Y/C SEPARATOR ON YC-19 BOARD

1. Separation of a Composite Signal into Its Y and Chroma Signals

A composite signal consisting of Y (brightness) and chroma signals. The name of "composite signal" comes from the meaning of "mixture".

The U-matic VTR system separately records the Y and chroma signals on tape. These signals can be obtained from the composite signal.

The one-inch VTR records the Y and chroma signals in the composite signal format directly, and consequently does not need to separate the composite signal into its respective components.

The SP mounts the Y/C separator on the YC-19 board. Fig. 1 shows the frequency spectrum of the Y and chroma signals.

By looking at the frequency spectrum we can see that the Y and chroma signals have the same frequency components.

Fig. 2 shows an extended view of this frequency spectrum. The main objective of the Y/C separator is to separate a composite signal into its Y and chroma signals thereby reducing any overlapped frequency points. The characteristics of the Y/C separator will be described below:

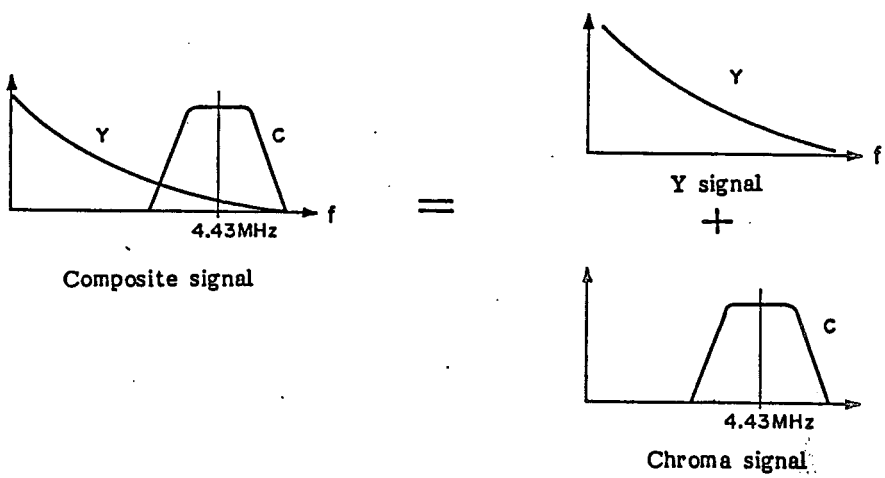

Fig. 1 Frequency Spectrum

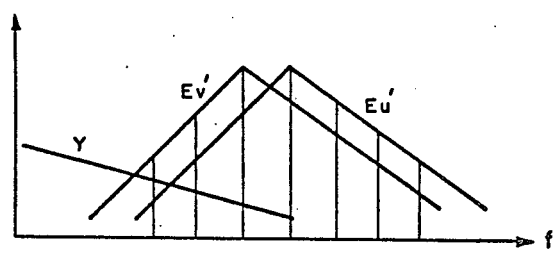

Fig. 2 Frequency Spectrum Including Overlapped Frequency Points

2. Characteristics of the Y/C Separator

(1) Crosstalk should not exist within the frequency band of the Y and chroma signals. A chroma signal falling into the Y signal frequency band causes interference which appears as dots on the picture. A Y signal falling into the chroma signal frequency band causes interference which appears as crosscolor on the picture.

(2) No frequency components should be lost from the Y and chroma signals.
High frequency components are lost due to the degradation of the frequency response. It causes the degradation of Y signal and resolution at the borders between the different colors of the chroma signal.

(3) No phase response should be degraded within the specified frequency band.
Phase response degradation within a specified frequency band distorts the waveform response. This distortion appears as K factor degradation for the Y signal and ringing in the chroma signal.
The waveform response is affected by the frequency characteristics of the group delay.

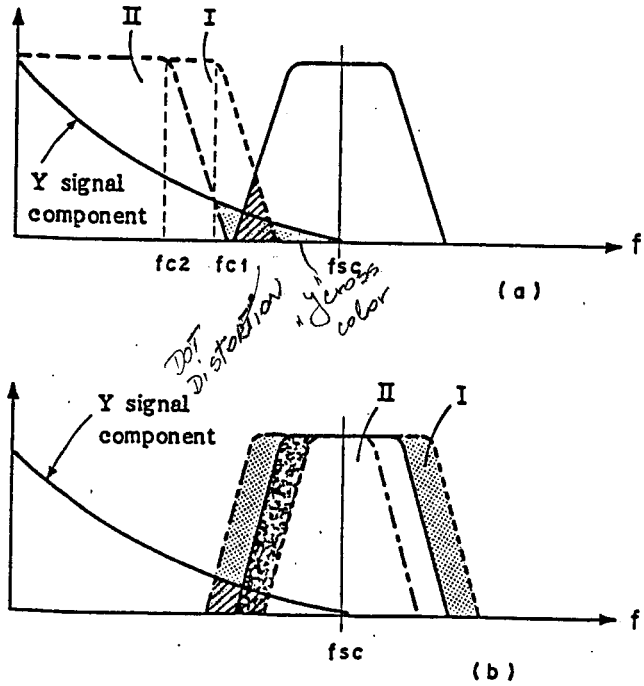

Fig. 3

3. Y/C Separator Functions

How to separate the composite signal into Y and chroma signal components are described below:

(1) Use of passive filters, i.e., an LPF and a BPF (or a trap)
Passive filters are used in conventional type-V or BVU-800 VTRs. It is the simplest way to eliminate any unwanted frequency components. However, any shared frequency components cannot be dissected in the Y and chroma signals. This in turn causes interference which appears as dots and crosscolor on the picture.

If the LPF cutoff frequency is set at a low value, the number of dots may be reduced. If the BPF bandwidth is narrowed, crosscolor may be reduced. (See Figure 3.) However, an LPF with a low cutoff frequency and a BPF with a narrow bandwidth may greatly degrade the high frequency components of both the Y and chroma signals. Passive filter use is not suitable for this purpose.
The passive filters degrade the phase responses of the Y and chroma signals distorting waveform response.

$fc2 < fc1$

Fig. 3 (a):
Dots can appear only in the hatched area in Case I. The high frequency components of the Y signal are lost in Case II.

Fig. 3 (b):
Crosscolor can only appear in the hatched area in Case I. The high frequency components of the chroma signal are lost in Case II.

(2) Use of the comb filter

The Y/C separators in the BVU-800 or VO-5850 VTRs, operating in NTSC systems, use a comb filter, and the correlation between the chroma signals in adjacent horizontal lines is used to separate the chroma signals from the composite signals as shown in Fig. 4.

Chroma signals are reproduced by shifting their phases 180 degrees every horizontal period in the NTSC systems. However, chroma signals are reproduced by shifting their phases 90 degrees every other horizontal period in PAL systems. Therefore a 2H delay device is used in all PAL systems.

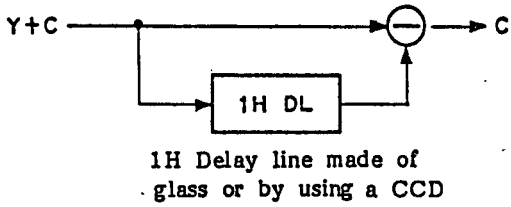

1H Delay line made of glass or by using a CCD

Fig. 4 Comb Filter Configuration

for PAL 2H DL is used.

This filter degrades resolution in the vertical direction for the PAL system. The correlation between the chroma signals of every other line is less than that in the adjacent line example. Consequently, it reduces the effect of the comb filter on crosscolor elimination in PAL systems. Therefore, comb filters are not used in PAL systems.

Why is this filter called a comb filter?

The filter shown in Fig. 4 is also called a transversal filter, and the frequency response of the transfer function in this filter is shown in Fig. 5. This frequency response resembles the comb structure.

(a) Transfer function

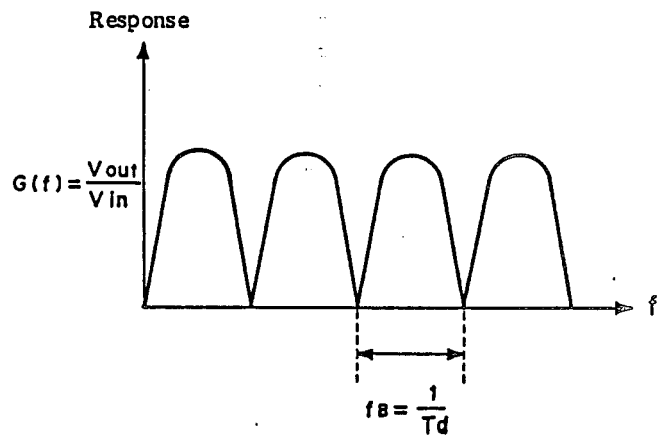

$f_B = f_H$ for Td = 1H

(b) Equivalent circuit

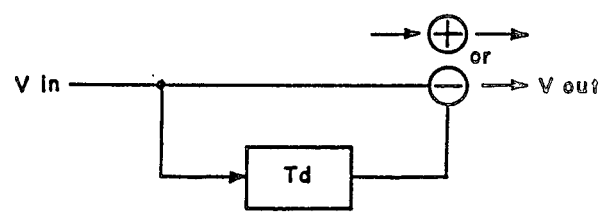

Fig. 5 Transversal Filter

What is correlation?

Correlation is the degree of relation between two events. Correlation between adjacent lines in the vertical direction is defined as "1" if the signals in the n-th line are the same as those in the (n-1)-th line. It is defined as "0.8" if the difference between them is negligible, and as "ϕ" if they vary significantly.

If a vertical line appears on the television picture frame it has a high vertical correlation coefficient. If horizontal lines appear every other horizontal period of time, it has a low vertical correlation coefficient.

The chroma signal cannot be dissected from the Y signal using vertical correlation in the PAL system. This can only be accomplished by using horizontal correlation. Horizontal correlation adheres to the same principles that govern vertical correlation. The correlation between adjacent points on a horizontal line can be established by utilizing the relationship between two points on a straight line, whose phases differ by $\lambda/2$ of fsc.

Fig. 7 shows the block diagram of the horizontal correlator.

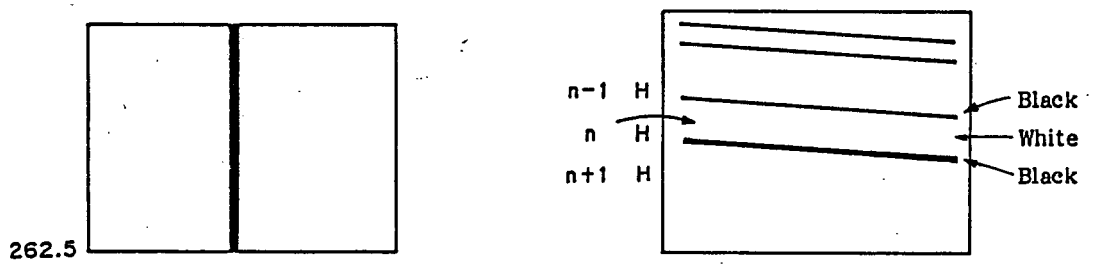

(a) Higher vertical correlation coefficient (b) Lower vertical correlation coefficient

Fig. 6 Vertical Correlation Coefficient

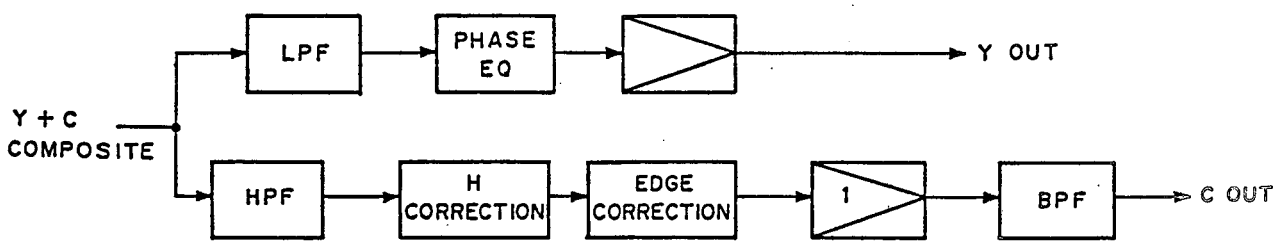

Fig. 7 Block Diagram of the Horizontal Correlator

(3) Separation of the chroma signal from the Y signal utilizing horizontal correlation

The principle behind Y/C separation, utilizing horizontal correlation, which is used in SP, is described below.

Correlation in the horizontal direction implies continuity in the horizontal direction. The chroma signal is continuously generated through amplitude modulation of the color subcarrier at a frequency of fsc. Assume a signal waveform such as that shown in Fig. 8. Compare the signal level at a phase $t-\lambda/2$ with the level at a phase of $t+\lambda/2$ as shown in Figure 8. If the signal levels at $t-\lambda/2$ and $t+\lambda/2$ are detected, then they are recognized as chroma signals. If these are not detected, these signals are recognized as Y signals and no output can be issued. This mode of operation is carried out by using a pair of delay devices with a delay time of $\lambda/2$. Comparisions between these signals at phases of $t-\lambda/2$ and $t+\lambda/2$ are performed by correlator CX-20013.

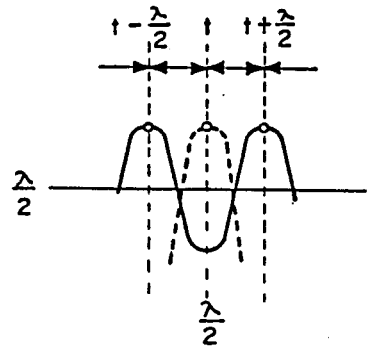

$$\lambda = \frac{1}{fsc} = 226\,(ns)$$

Fig. 8

4. Description of Function Blocks

4-1. Y Channel

The video signal is once fed to the MD-25 board. It is fed to the YC-19 board through connector 1 after passing through buffer Q1, low-pass filter FL-1, and a phase equalizer consisting of Q2 and Q3. The phase equalizer output is the Y signal.

The low-pass filter can pass only frequency components that are lower than the cutoff frequency or 3.5MHz. It has a response of -1dB at 3MHz, and a phase delay at the knee point of the frequency response causing the overshoot shown in Fig. 9 (a).

If a waveform like that shown in Fig. 9 is sent to the Y channel, ringing may appear on the picture. The waveform may be degraded each time that the tape is copied if no phase equalizer is used. Thus, a phase equalizer must be used to reduce phase distortion. A network having a group delay resembling that indicated by the broken line in Fig. 10 is used for the phase equalizer. It is because of this that a group delay, as indicated by the solid line in Fig. 9 (b), can be compensated for through the equalizer network. The equalizer has a unity gain over the specified frequency range. The solid and dashed lines in Fig. 10 show the input signal group delay and compensated signal group delay, respectively.

Fig. 11 shows the response waveforms of the 2T pulse and color-bar signals, respectively.

The Y signal is amplified using IC-1 and then appears at TP-2. The output Y signal returns to MD-25 from CN1-1. (See circuit diagram-1.)

(a) Waveform characteristic

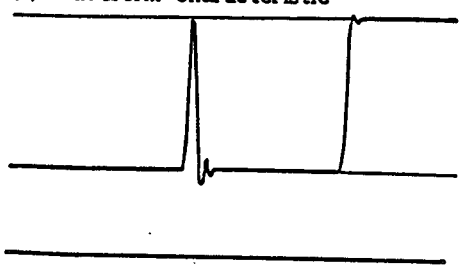

Ⓒ 2T-pulse/2T-bar signals

(b) Transfer function

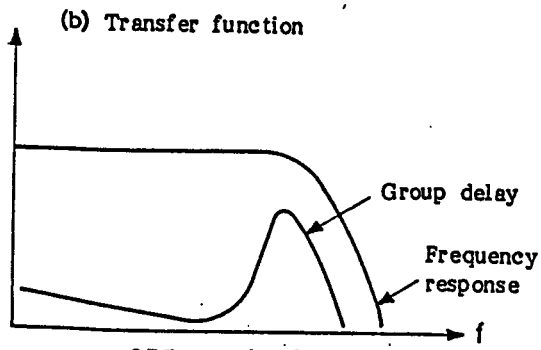

LPF transfer function

Fig. 9 LPF Transfer Function

(ii) Phase equalizer

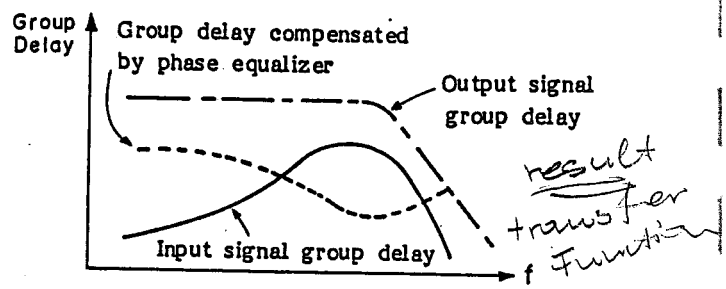

Fig. 10 Phase Equalizer Operation

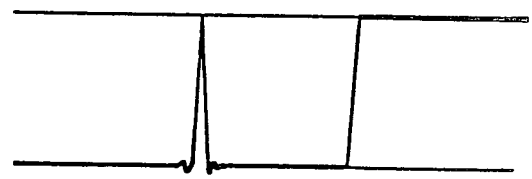

Ⓓ 2T-pulse/2T-bar signals

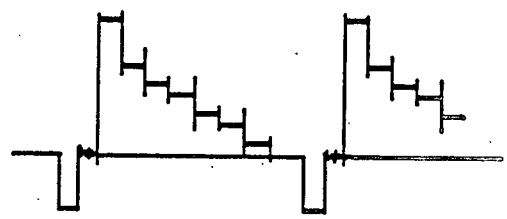

Ⓔ 75% Color Bars

2T-Pulse and Color Bar Signals

4-2. Chroma Channel

The composite signal appearing at TP-1 is fed to the high-pass filter consisting of C102 and R101. The high pass filter is used to pick up the chroma signal and high frequency components of the Y signal. These signals appear at TP101 and are then fed to correlator (CX-22013) IC101. IC101 provides both the horizontal and vertical correlation functions. Only the horizontal correlation function is used for the PAL system.

The horizontal correlation function and edge compensation circuit will be described below.

ii) Horizontal correlation function

Waveforms 1 through 4 indicate the principle behind the 1/2-λ horizontal correlation function. Input signal 1 indicates a chroma signal component picked up from the high-pass filter. The crosscolor signal component leaking from the Y signal can appear at the edge of an image on the picture. A subtle ringing pattern can be seen on the CRT, lowering the resolution.

The horizontal correlation function suppresses the crosscolor signal component to an amplitude level which is negligible. The λ/2-delayed and λ-delayed signals are generated from the input signal by using a pair of λ/2-delay lines. (Note that λ in the PAL system corresponds to 226ns.)

Waveforms 2 and 3 indicate the λ/2-delayed and λ-delayed signals, respectively. Among the orignal, λ/2-delayed, and λ-delayed signals, the smallest signal is output as waveform 4. The crosscolor signal component level does not exceed the maximum chroma signal level.

Signals correlated in the horizontal direction can pass through the horizontal correlation circuit. Moreover, only chroma signals in the original, λ/2-delayed, and λ/2-advanced phases can pass through the horizontal correlation circuit due to their high correlation factor.

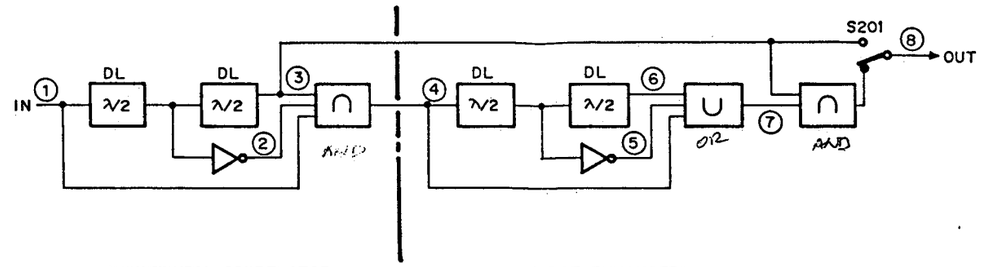

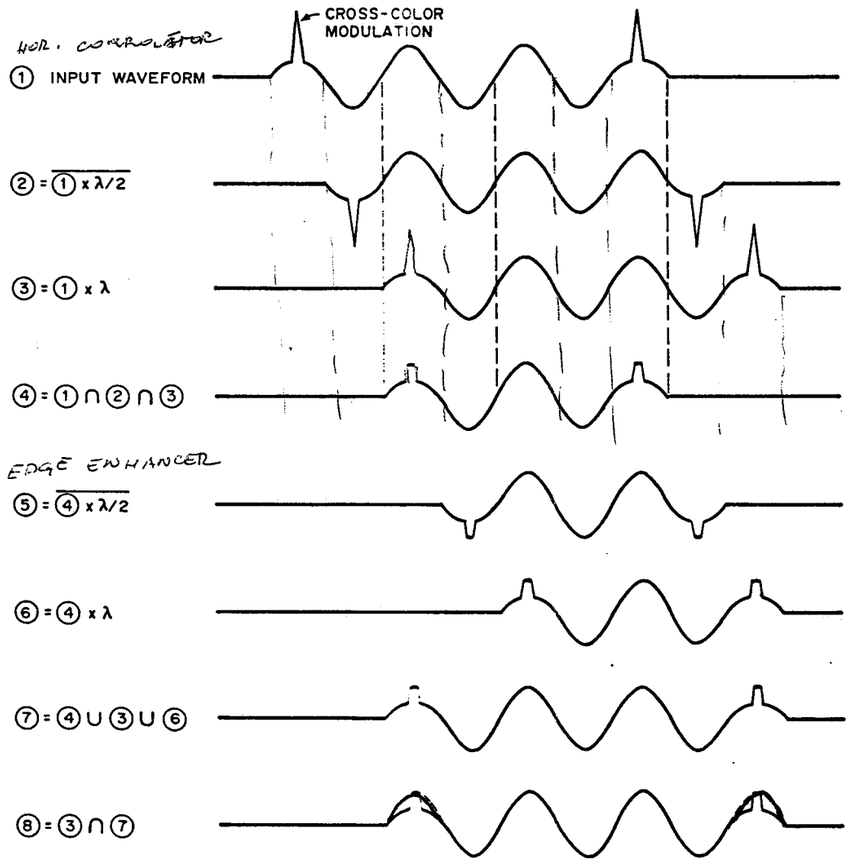

A → Crosscolor modulation → A

The frequency bandwidth is limited by using a BPF in order to obtain the necessary chroma signal bandwidth. (J), at the left, is used as a chroma output signal.

The circuit operation will be described hereafter:

The original signal appearing at pin 7 of IC101 is fed to delay line DL101 with a delay time of 226ns. The output signal at the internal tap (λ/2 with a delay time of 113ns is fed to pin 6 of IC101. The λ-delayed signal (delayed by 226ns) is fed to pin 4 of IC101. The non-delayed, λ/2-delayed, and λ-delayed signals are fed to the horizontal correlation function circuit to eliminate the crosscolor component. The output signal of the horizontal correlation function circuit can be seen at TP212. This signal is fed to delay line DL201 in order to separate it into the non-delayed, λ/2-delayed and λ-delayed signals. The original signal appears at TP201, the λ/2-delayed signal at TP203 and the λ-delayed signal at TP202. (See circuit diagram 2.)

These signals are fed through the correlator to the edge compensation circuit.

Transistors Q205 through Q207 and Q209 through Q211 are used for the correlator. A pair of channels are provided in the correlator for the following reason.

The correlator consists of a pair of transistor circuits, (1) and (2), as shown in Fig. .
If a signal level is higher than the reference level, transistor circuit (1) can be operated as an OR gate. If the signal level is lower than the reference level, it can be operated as an AND gate.
If the signal level is higher than the reference level, transistor circuit (2) can be operated as an AND gate. Finally, if the signal level is lower than the reference level, it can be operated as an OR gate.
Analog OR or the AND gate function cannot be realized using only transistor circuit (1) or (2). However, these functions can be realized by using transistor circuits (1) and (2) in combination.
If the OR gate function is required for the edge compensation circuit, transistor circuit (1) is used for levels higher than the reference level and transistor circuit (2) for levels lower than the reference level. Signals with the levels higher than this reference level can be selected by the slicer in transistor circuit (1). Signals with the levels lower than the reference level can be selected by the slicer in transistor circuit (2). These 2 signals are added together to obtain an OR'ed signal. The threshold used to determine the levels higher than the reference level can be established by RV201 and that to select the levels lower than the reference level can be established by RV202.
The signal having a level lower than the reference level appears at TP204 and the signal having a level higher than the reference appears at TP205. RV203 is used to mix these signals and also to adjust its MIX RATIO.

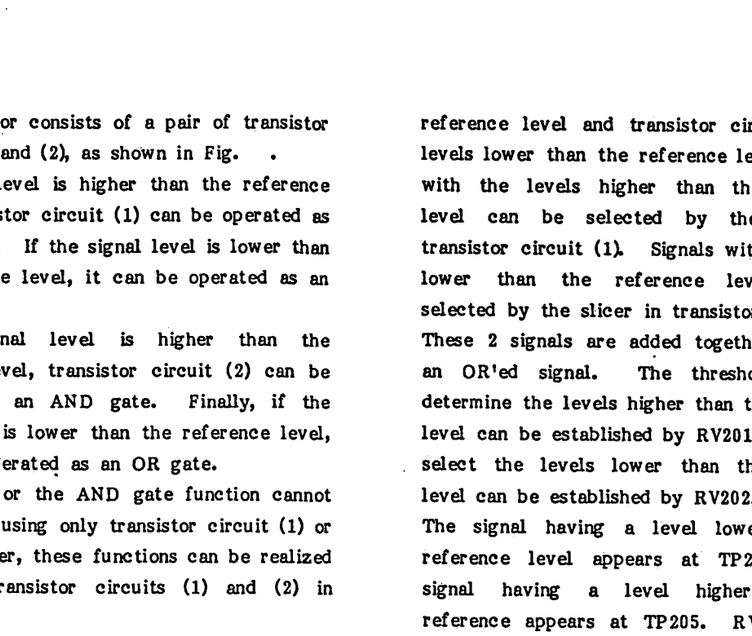

Fig. 12 Correlator Operation

The OR gate output signal waveform can be seen at TP207. This signal waveform appears at TP206. The signal appearing at TP206 and the λ-delayed signal are AND'ed by the AND gate to check for correlation between them. The λ-delayed signal is fed to the phase equalizer consisting of Q213 and RV204 to fine adjust the λ-delayed signal's phase. The signal level can be adjusted by IC202 and RV205.
The correlator consisting of Q214 through Q216 and Q219 through Q220 has an AND gate function. Signals having levels that are higher than the reference level can be selected by slicer RV206, and signals having levels lower than this reference level can be selected by slicer RV207. RV208 is used to mix these signals to obtain an AND'ed signal.

A signal with a level lower than the reference level appears at TP208, and a signal with a level higher than the reference level appears at TP209. (See circuit diagram 3.)
The AND gate output signal is fed to IC203 to amplify it, after which the output signal appearing at TP210 is fed to bandpass filter FGL201 to limit the frequency bandwidth. This filter then appears at TP211, after which it goes to the MD-25 board passing through pin 7 of CN1. (See circuit diagram 4.)
S201 is an ON/OFF switch used to control the edge compensation circuit, and it can be used to bypass the correlator.

<Circuit diagram 1>

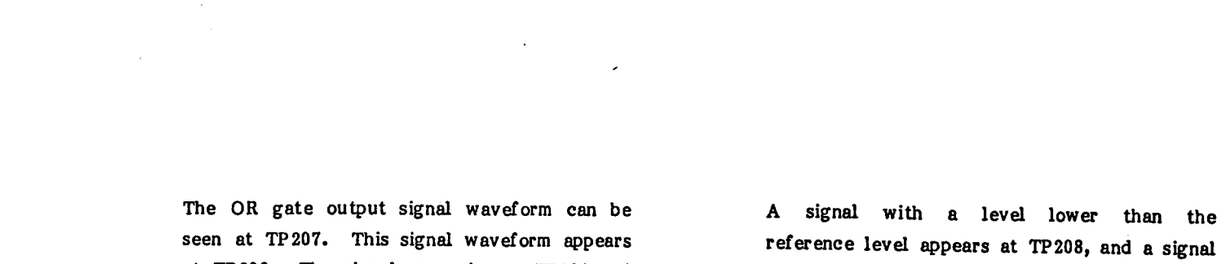

<Circuit diagram 2>

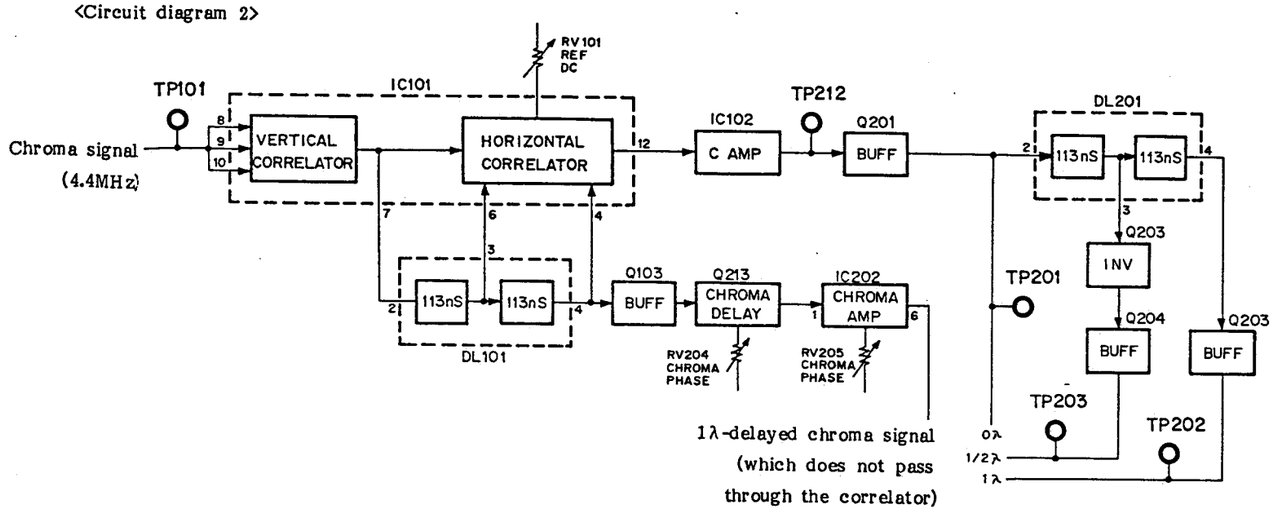

<Circuit diagram 3>

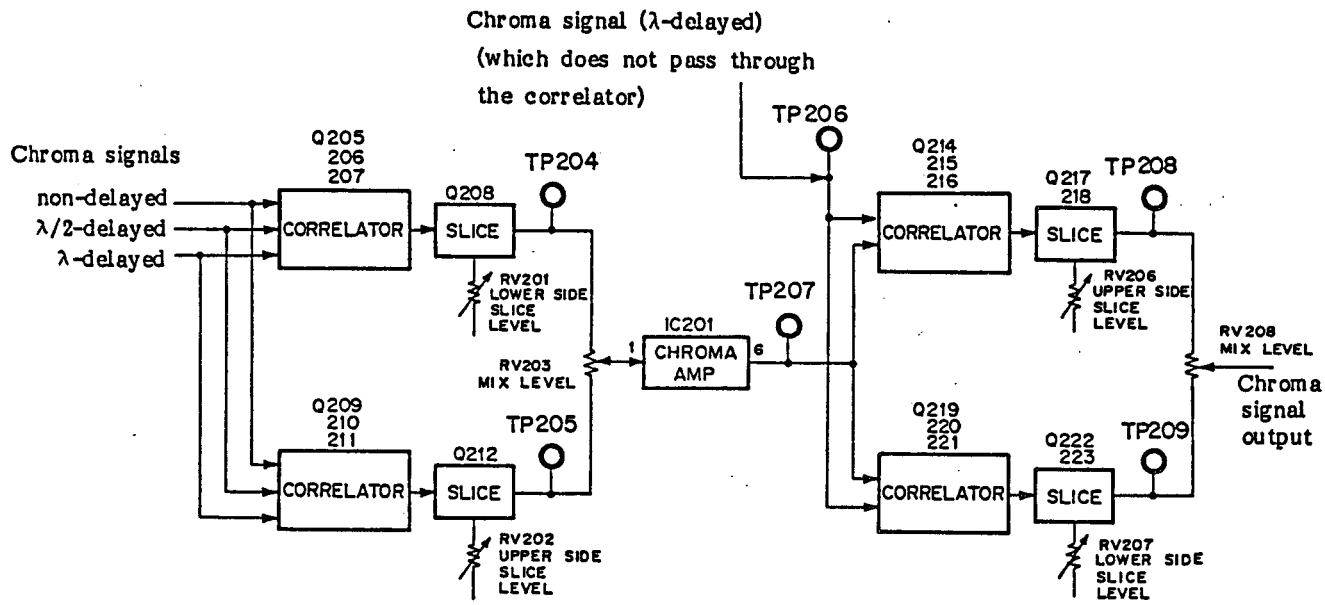

<Circuit diagram 4>

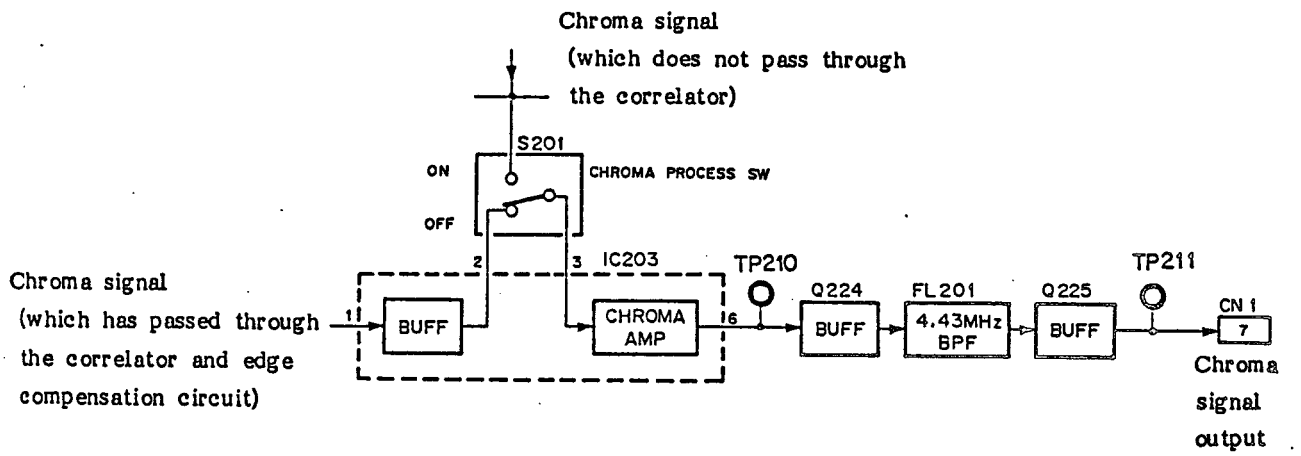

MD-25 board

1. Outline

The SP version provides the standard functions of the BVU-800 plus the following additional functions.

<Y channel>

1. 2 stage high frequency preemphasis
2. Feedback preemphasis
3. REC HF amplification

<Chroma channel>

1. Horizontal locking of the low-frequency-converted chroma signal
2. Lower booster

The composite video signal input to the SP version is separated into the Y and chroma signals. The Y signal is fed to the AGC system and the chroma signal to the ACC system. In the BVU-800, the low-pass filter is installed in the AGC loop to separate the Y signal from the composite video signal after which the chroma signal is fed to the ACC system through the bandpass filter.

The operation principle for the new function block will be described hereafter:

1. 2 stage high-frequency preemphasis

The frequency response of the BVU-800 high-frequency preemphasis circuit is shown in Fig. 1.

The frequency response is flat at a gain of 0dB over the specified frequency range but changes at lower signal levels. This response indicates high-frequency preemphasis. When the video signal is recorded, the frequency response at lower signal levels is enhanced. Thus, the low frequency components suppressed by OA can be compensated for.

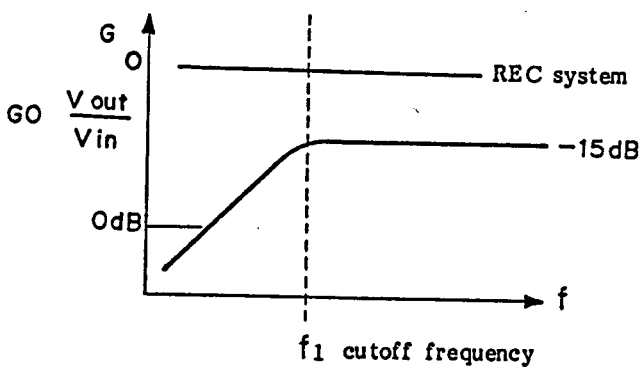

Fig. 1

When the magnetically-recorded electric signal is reproduced by demodulation during playback operations, the Y signal will contain noise. Noise can be eliminated using the noise canceller in the PB system.

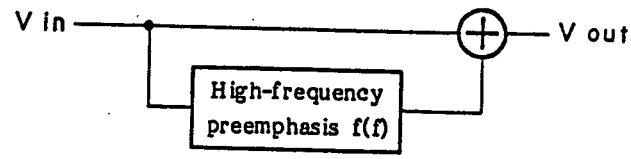

Circuit function block

The frequency response of the noise canceller is flat at a gain of 0dB over the specified frequency range, as shown in Fig. 2. Moreover, it has a dip at a specified frequency point if the gain is lower than 0dB. The BVU-800 noise canceller eliminates both the secondary harmonic and blue-channel beats.

* Secondary harmonic beat:

Blue-channel beat: $f_{(Y-C)}$ (NTSC) expression.

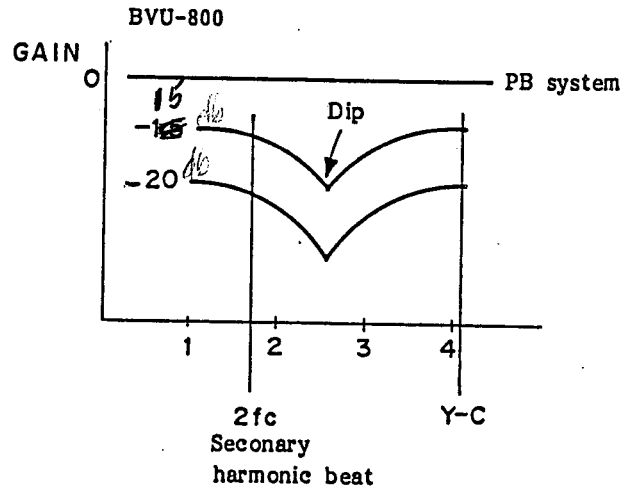

The dip should be set at a frequency of a little lower than 3MHz in the noise canceller in order to reduce the beat. The BVU-200 uses a noise eliminator having a response like that shown below because it requires no phase adjustment. The video signal in the BVU-200 is first fed to the noise eliminator and then fed to the noise canceller. The noise eliminator eliminates the high frequency component of the Y signal as well as noise, but on the contrary also degrades picture resolution.

Frequency response of the noise eliminator

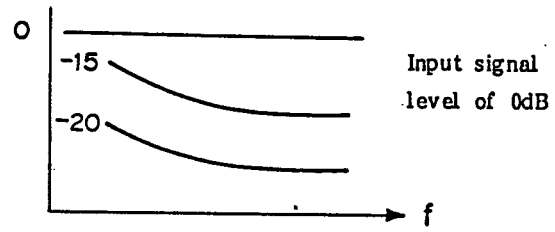

The high-frequency preemphasis circuit can be used in place of the noise eliminator, and it can be used to obtain video signals having a flat frequency response at any signal level.

Although the noise canceller can eliminate noise without any Y signal degradation, compatibility between the BVU-800 and BVU-200 is unsatisfactory.

The BVU-800 has a K factor of 5% or less when the noise canceller is used. The incompatibility of the high-frequency preemphasis circuit in the SP with the noise canceller result in problems yet to be resolved.

The noise canceller cannot be used to eliminate the secondary harmonic beat in the SP. The secondary harmonic beat should be eliminated by another circuit. The noise canceller can thus be used to eliminate noise at 4.43MHz and at nearby frequencies including the chroma and (Y-C) signal frequencies. The waveform response, however, should not be degraded.

The frequency response, up to 2MHz, affects the waveform response. The noise canceller in the SP version has a flat response at a gain of 0dB, and has a high-frequency response, which is lower than that at 2MHz, in order to drastically reduce noise at the chroma and (Y-C) signal frequencies.

The high-frequency preemphasis circuit and the noise canceller are used together to improve the frequency response as well as for noise elimination purposes.

Note: Although the high-frequency preemphasis circuit and noise canceller are used together in the BVU-850P, the high-frequency preemphasis circuit and its corresponding de-emphasis circuit are combined or the high-frequency preemphasis circuit and noise canceller with high cutoff frequencies are combined in the SP version.

The high-frequency preemphasis circuits with higher and lower cutoff frequencies are used together in the REC system. Thus, two-stages of high-frequency preemphasis circuits with higher and lower cutoff frequencies are used.

<Feedback preemphasis circuit>

If a video signal, with its high frequency component enhanced by the high-frequency preemphasis circuit, is fed through the FM modulator to the recording head, it will not be recorded due to the interaction between the coercive force and head gap. It will cause overmodulation thus necessitating the use of a white clipper.

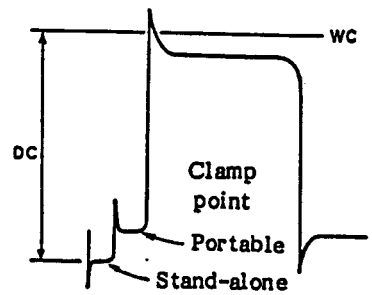

The white clipper in the portable VTR sets the pedestal level to the reference level and clips all white levels greater than the cutoff threshold, while the white clipper in the stand-alone VTR sets the sync tip to the reference level and clips all white levels greater than the above cutoff threshold. Part of the signal clipped by the white clipper cannot be reproduced during playback operations. Thus, the waveform may smear when the clipped PB video signal is demodulated and de-emphasized.

A smear compensation circuit, to enhance the clipped portion of the PB video signal, is provided in the recording system. The feedback pre-emphasis circuit is used to simultaneously realize the smear compensation and white clipping functions.

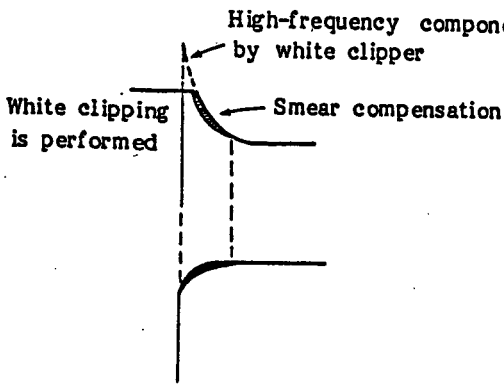

The clamped video signal is fed to the directly-coupled video amplifier. The total feedback loop gain is given by

$$G = \frac{Ao}{1-\beta Ao}$$

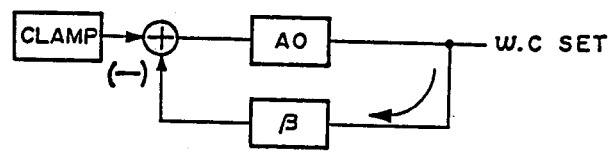

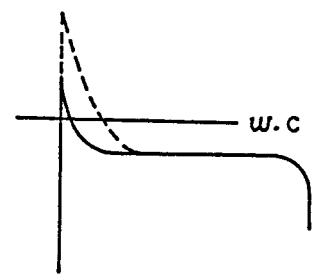

The high-frequency component rejeced by the white clipper cannot be transmitted to the feedback system. If β decreases, the resulting amplifier gain automatically increases because no peak component can be fed back to the input terminal. Thus, such a waveform response as that shown on the right can be obtained. The clipping level for the white clipper, however, is unchanged and thus the energy from the signal component which goes beyond the cufoff threshold is added to the signal waveform which is below the cutoff threshold as shown by the hatched area in the illustration.

REC HF Circuit
(Configuration)

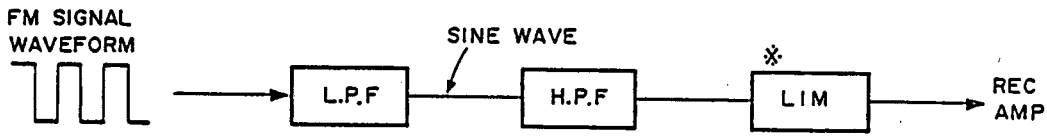

The REC HF circuit consists of the above circuit elements.

LPF: Used to eliminate the third and higher harmonics from the FM signal in order to obtain a sine wave signal.
It is a wide-band filter having a cutoff frequency of 10MHz or more.

HPF: Used to enhance the high frequency component so that the PB signal can be limited by the limiter.
Many frequency changes occur at the point where the FM signal frequency changes from LF to HF.

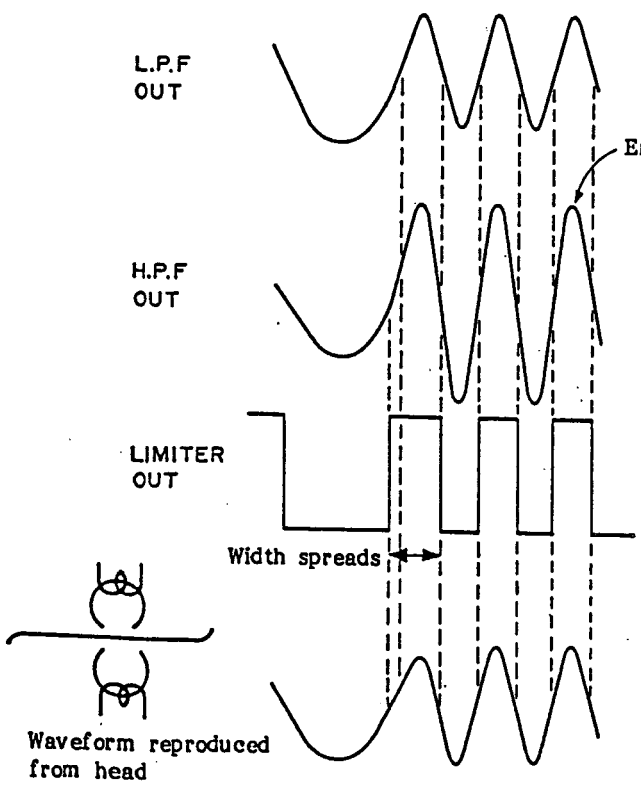

Enhanced high-frequency signal level

The width of the first cycle of the signal is spread out when the frequency changes from LF to HF at which overmodulation occurs.

The first cycle of the RF signal output from the tape head is suppressed by the limiter, and the demodulated signal carriers are completely processed.

Spreading of the pulse width implies FM signal phase modulation.
If the pulse width is spread out too much, the waveform may be distorted and the waveform edge deformed.

The pulse width change should compensate for the phase change which has occurred in the electromagnetic conversion system. Moreover, the pulse width change should not exceed the above phase change.

<Overmodulation>

- When the frequency of the Y FM signal, at the input of the REC amplifier, changes from LF to HF, the first cycle of the RF signal decreases in signal level during playback operations performed after recording operations. This is due to the interior amplitude and phase responses occurring at RF high-frequencies.

  When the above RF signal is fed to the limiter, the first cycle cannot be suppressed by the limiter.

  When demodulated, the first cycle is recognized as part of the lower frequency signal and it has such a low response that it appears as a black spot on the monitor.

  Overmodulation is performed at this black spot on the monitor.

  (Overmodulation at the white peak level causes problems but they are not described.)

- The first cycle of the RF signal when its frequency changes from LF to HF should be completely suppressed to protect over-modulation.

  The amplitude and phase responses of the RF system should be linear. If the phase response of the tape head system is linear, the reproduced signal swings through the central point of the dynamic range in the limitter system if the tape head system provides an ideal differential phase response. However, the above does not occur for inferior differential phase responses.

  The problem of overmodulation can be solved by enhancing the amplitude response of the RF system at high frequencies. In this manner the first cycle of the RF signal can be suppressed.

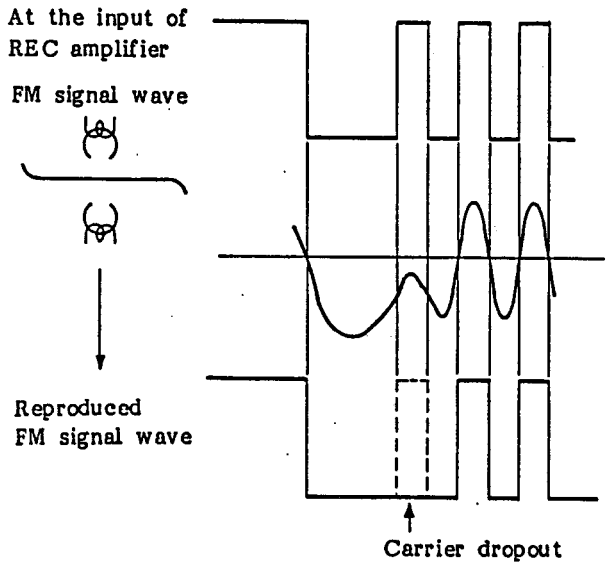

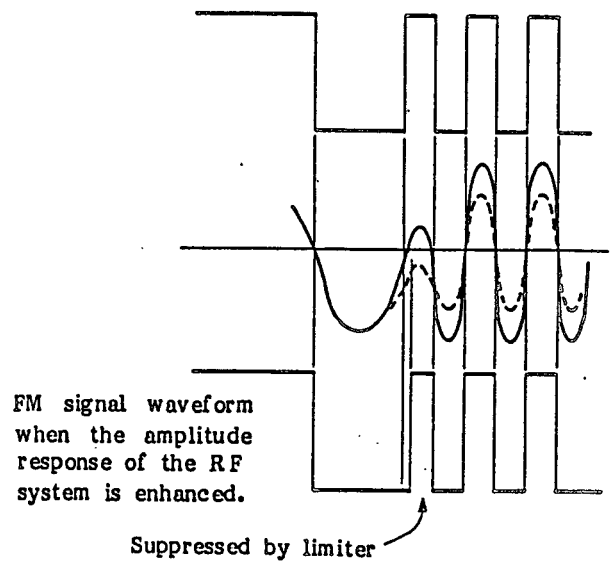

Operation of the chroma system will be described below. (See the block diagram.)

Chroma-signal conversion to a lower frequency is performed by multiplying 4.43MHz and the lower band conversion frequency, to obtain the frequencies of 924kHz and (5.35 + 4.43)kHz. Among these frequencies, the 924kHz component is picked up by LPF. (See Fig. 7)

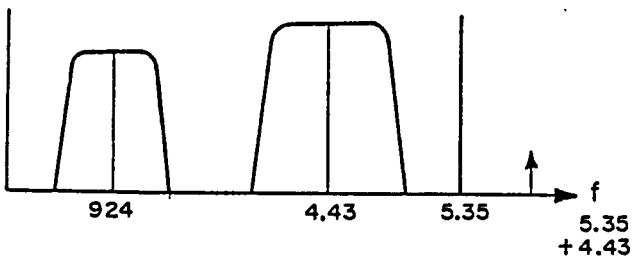

Fig. 7 Spectrum Obtained by Chroma Signal Conversion

The APC loop locked at the subcarrier being input, is used to generate a 4.43MHz signal in the SP version.

In the BVU-800, a crystal oscillator generating a 5.35MHz signal is used.

When the generator output signal is locked at the 4.43MHz subcarrier interleaved with the Y signal, a continuous 4.43MHz signal locked at the Y signal can be obtained. When both the 4.43MHz signal generated by the APC loop and the 924kHz signal generated by the AFC loop, synchronized with the Y sync signal, are fed to the frequency converter, a 5.35MHz signal locked at the Y signal can be obtained from this frequency converter. When the chroma signal is low-frequency converted by using both the chroma signal locked at the Y signal and the converter output signal locked at the Y signal, the resulting 924kHz signal to be recorded is locked at the Y signal. Fig. 8 shows the block diagram of the low-frequency conversion circuit.

The secondary beat at 924kHz is not easily recognized on the picture monitor. Further, twice the chroma signal frequency can be set every (fH/4) intervals when locked at fH.

Twice the chroma signal frequency, 2fc, is given by

$$2fc = \frac{(2m-1)}{4} fH$$

It can be set every (f/H) intervals when locked at the Y signal frequency.

In the current version, it is set at a frequency within the 5.35MHz ± 4Hz range thus rendering the secondary beat at 924kHz hard to recognize on the picture monitor. In the SP version, the 5.35MHz signal is locked at the Y signal without any phase disturbance. Therefore, the visual effect of the secondary beat, at 924kHz, on the video signal, is reduced.

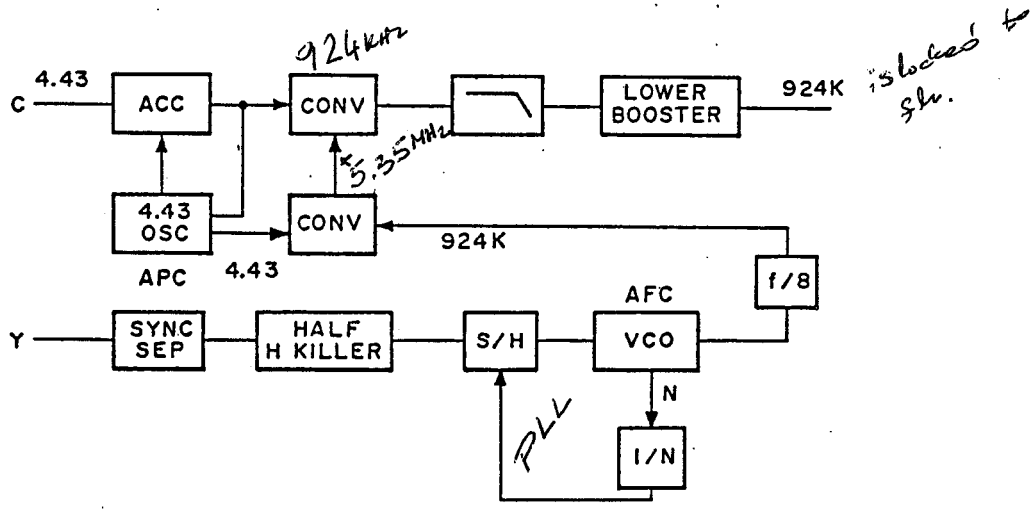

Fig. 8 Block Diagram of the Low-Frequency Conversion Circuit

5. Lower Booster

The lower booster compensates for chroma signal phase distortion at low frequencies to reduce ringing in the chroma signal.

In the current version, the rotary transformer causes phase distortion at low frequencies and the frequency response is flat in the cutoff frequency and above frequency range.

Chroma ringing is caused by the phase response which occurs at all frequencies up to cutoff frequency. The NTSC system with a low-frequency-converted chroma frequency of 688kHz is inferior to the PAL system in the ±500kHz frequency band. (See Fig. 9)

In the SP version, the phase response of the group-delayed chroma signal is made flat at all frequencies up to cutoff frequency by enhancing the low frequency response of the lower booster. The lower booster is installed in the recording and playback systems to compensate for the phase response at all frequencies up to cutoff frequency. This procedure will in turn reduce chroma signal ringing.

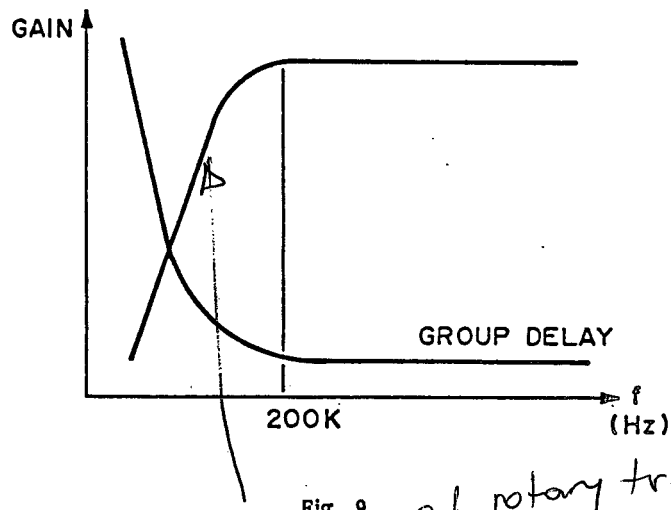

Fig. 9

depending of rotary tr. functions.

3. FUNCTION BLOCKS

The Y signal is fed from connector pin CN1-1 on the YC-19 board to connector pin CN1-8 on the MD-25 board, and it appears at TP2 passing through video switch IC1 (CX-20060). The DUB Y signal is fed to pin 3 of IC1. When the signal voltage at pin 6 of IC1 goes low, the DUB Y signal can appear at TP2. The LINE:H/DUB:L selection signal fed to connector 27A on the MD-25 board controls the signal at pin 6 of IC1. The Y signal at TP2 is fed to pin 13 of IC2 through buffer Q6; it then appears at pin 15 of IC2 passing through the ABC amplifier. When the LINE/DUB selection signal specifies LINE, the Y signal is fed to pin 17 of IC2. When it specifies DUB, the Y signal is fed to pin 19 of IC2. Delay line DL-1 with a delay time of 1μs is used to set the delay time of the chroma signal to equal that of the Y signal. The LINE/DUB selection signal is valid when fed to pin 18 of IC2. The Y signal amplified with video amplifier IC2 appears at pin 21 of IC2 after which it goes to TP4. See circuit diagram 1.

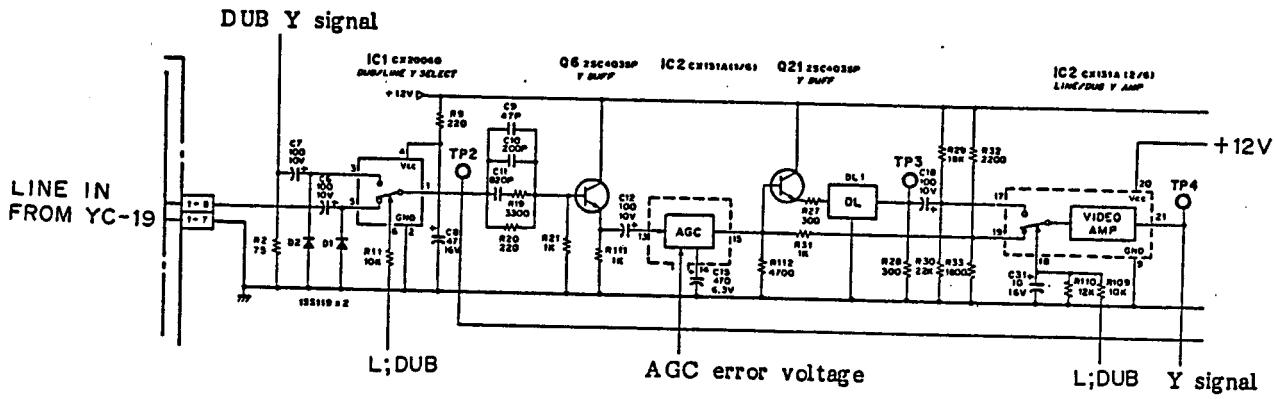

Circuit Diagram 1

The Y signal branches into 2 routes, one of which is fed to pin 22 of IC2 to separate the sync signal component from the Y signal. This sync signal component can appear at pin 24 of IC2. Moreover, it is fed to pin 2 of IC2 to mix it with the Y signal. The obtained composite signal is fed to the sync AGC detector circuit. The detector output appearing at pin 3 of IC2 is fed to a lowpass filter consisting of C32, C37, R113 and R17 so as to integrate the error voltage. This error voltage is fed to pin 16 of IC2 passing through RV1, and amplified with DC amplifier IC2 to control the AGC loop. Q7 is open when the LINE/DUB selection signal specifies DUB, and it releases R117 from the low-pass filter to increase its time constant.

The AGC signal level can be adjusted by RV1 and it can be used to adjust frequency deviation. One RV1 terminal is connected to the cathode of D13, and the other to the external video signal level control terminal, 24A on the MD-25 board.

The AGC signal level can be controlled manually by the video level adjuster on the front panel during manual operations.

The Y signal passing through buffer Q8 is fed to the 2-stage high-frequency preemphasis circuit consisting of IC3 and IC4. In this manner the low-level high-frequency component can appear at TP5. The Y channel signal and this low-level high-frequency component are mixed together with the mixing circuit consisting of Q9, R56 and R57. The mixed signal appears at TP7. When the DUB:H signal goes high, transistor Q4 mutes the high-frequency preemphasis circuit. Switch S1 is used to control the operation of the high-frequency preemphasis circuit.

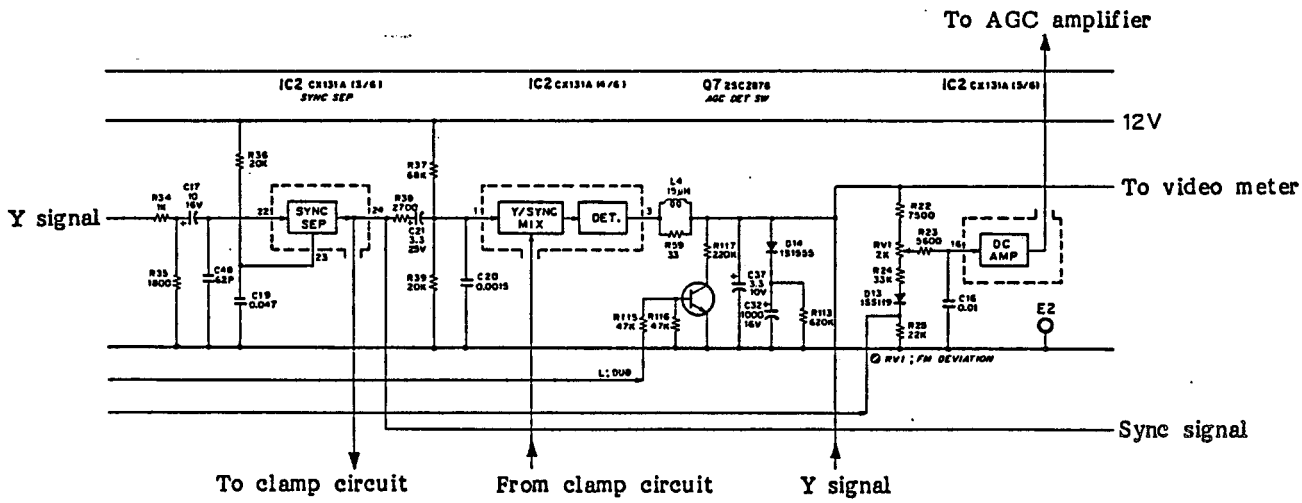

Circuit Diagram 2

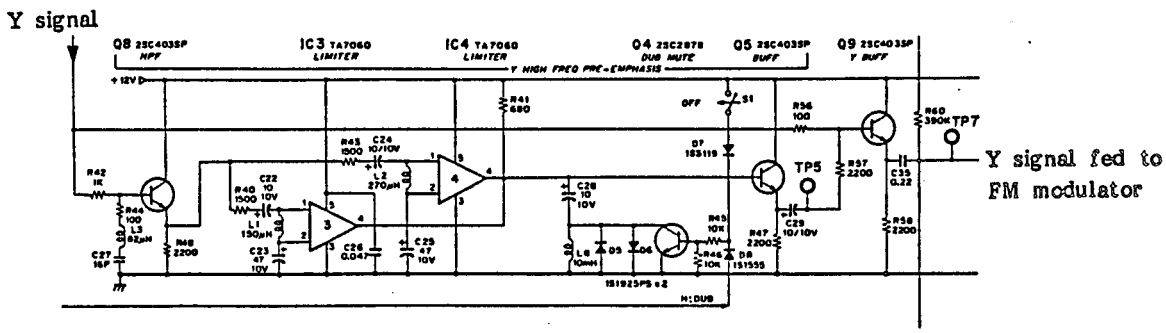

Circuit Diagram 3

The Y signal appearing at TP7 is fed to the feedback preemphasis circuit consisting of Q301 through Q307, Q312 and Q314. RV303 is used to adjust the dark clipping point of the preemphasis circuit operating in the SP mode, and RV304 is used to adjust the dark clipping point of the preemphasis circuit operating in the conventional mode. The H:SP signal is fed to Q311 so as to turn on Q316, and then Q316 can be used to select either the SP or conventional mode. RV301 is used to adjust the white clipping point of the preemphasis circuit operating in the SP mode and RV302 is used to adjust the white clipping point of the preemphasis circuit operating in the conventional mode. When the preemphasis circuit is operating in the conventional mode, Q313 turns on to set the preemphasis circuit to the SP mode.

The subcarrier remains in the H:SP signal and it can be trapped by LV301 at the emitter of Q308. The trapped signal appearing at TP302 is fed to pin 6 of IC2.

The signal voltage fed to pin 4 of IC2 passing through TP7 is clamped by the sync signal fed from pin 22 of IC2 through the sync separator.

The sync signal is fed from pin 24 of IC2 through a sync delay circuit consisting of C20 and R38 to pin 1 of IC2. The clamped Y signal and the delayed sync signal are mixed there. The mixed signal is fed to the AGC detector and the error voltage is fed to pin 3 of IC2. The obtained signal is fed back to the AGC amplifier to establish an AGC loop. RV1 is used to determine the standard threshold level of the AGC amplifier, and this threshold level determines Y FM modulator deviation. The Y signal appearing at TP302 is fed through pin 6 of IC2 to the Y FM modulator. RV-5 is used to adjust the carrier frequency at the sync tip when the system is operating in the conventional mode. When the system is operating in the SP mode, Q16 turns on. RV-7 is used to adjust modulator balancing to minimize the secondary harmonics of the modulator.

This FM signal appearing at TP11, which is fed from pin 10 of IC5 to pin 14 of IC5, can be fed to the REC HF circuit. RV-8 is used to adjust HF balancing, and the output of the REC HF circuit appears at pin 3 of IC5. This mode of adjustment should be performed to minimize the secondary harmonics of the output signal observed on the spectrum analyzer.

The Y FM signal appearing at TP12 is fed to FL2 (for operation in the conventional mode) and FL3 (for operation in the SP mode). RV9 is used to adjust the Y REC current in the conventional mode. When the system is operating in the conventional mode, the Y FM signal appears at pin 5 of IC6. When the system is operating in the SP mode, the Y FM signal appears at pin 3 of IC6. The Y FM signal is fed to pin 1 of IC6. Switch IC6 is controlled by the control voltage at pin 6 of IC6. The SP:H signal is inverted by Q17, after which it goes low. When the SP:H signal goes low, the signal at pin 6 of IC6 goes low. In this state, the signal voltage at pin 3 of IC6 is fed to pin 1 of IC6. When the system is operating in the conventional mode, the SP:H signal goes high. In this state, the signal at pin 5 of IC6 is fed to pin 1 of IC6. This signal appears at TP13 and goes to 11A on MD-25. It then goes to the RP board. The other output signal is sent to the YD board passing through 11B when the system is set in the EE state by buffer Q18. If the system is set in any mode other than EE by switch Q19, the Y signal is muted. See Fig. 4 for details.

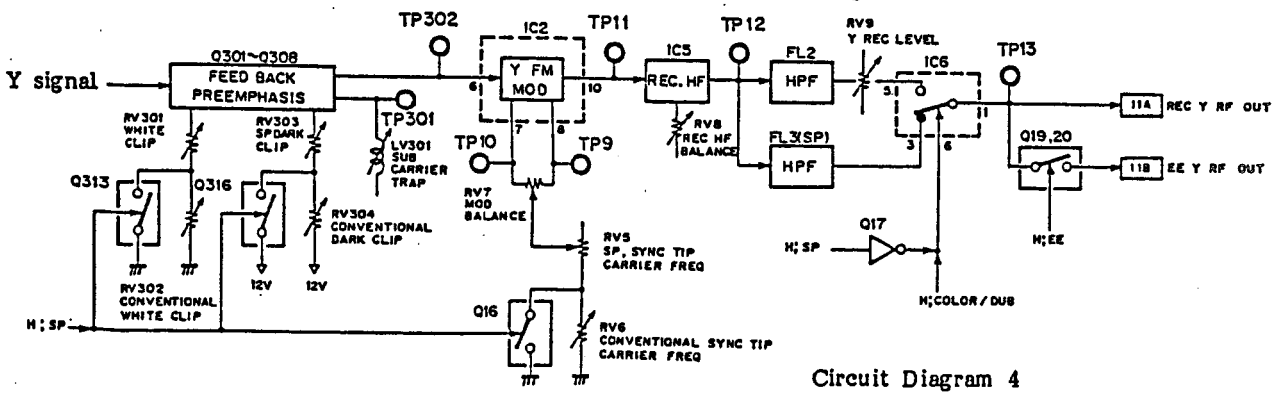

Circuit Diagram 4

The Y AGC error signal, passing through switch Q7, is fed to pin 6 of IC501 and then to pin 5 of IC501. The Y AGC error signal is then fed to the video meter. The video meter is connected to 25A and 26A. Terminals 25A and 26A are connected to pins 1 and 7 of IC501. RV502 is used to adjust the signal level on the video meter. When the video signal at 1Vp-p is applied to the input terminal, the video meter should indicate the reference level. The video meter should be set at 1Vp-p by adjusting RV502.

The PB RF signal fed to pin 4 of IC501 is set at 1Vp-p by adjusting RV501.

Either the EE/REC mode or PB mode is selected by the DC control voltage at pin 3 of IC501. When the DC control voltage is high, the REC/EE mode is selected. When the DC control voltage is low, the PB mode is selected.

The PB RF signal is fed from the YD-17 board to 15B. It then appears at TP501. This signal is fed to pin 14 of IC501 and then amplified there. The amplified signal appears at pins 8 and 10. The amplified PB RF signal appearing at TP502 becomes the OFF TAPE RF signal and it is fed to 21A to detect DOC during timebase correction (TBC). The signal at pin 8 of IC501 is fed through 23B to the YD-17 board. On the YD-17 board, it can be used as the RF envelope signal and RF meter signal.

See Fig. 5 for further details.

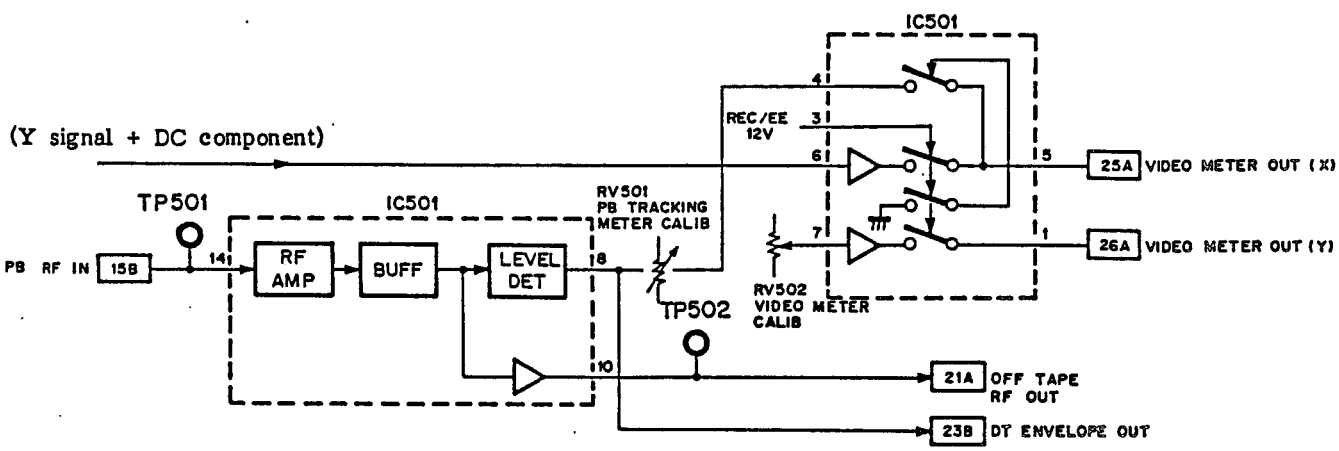

Circuit Diagram 5

<Chroma system>

The chroma signal separated from the composite video signal on the YC-19 board is fed to 1-2 on the MD-25 board. It can appear at TP-201. Q210 is a switch used to mute the chroma signal during DUB. The chroma signal is fed through pin 6 of IC201 to the ACC circuit. The output signal of the ACC circuit can appear at pin 3 of IC201 and at TP205. The signal voltage at pin 5 of IC203 and the pilot burst signal at pin 3 of IC203 are mixed together and this mixed signal appears at TP203. The pilot burst signal is selected by the control signal at pin 6 of IC203 and this control signal goes high only while the pilot burst signal is being issued. The signal voltage at pin 2 of IC201 is fed through the frequency converter circuit to pin 24 of IC201.

The 5.35MHz signal at pin 1 of IC201 is also applied to the frequency converter. Signals at frequencies equal to the sum and difference of these signal frequencies can be obtained from the frequency converter. Low-pass filter FL202 is used to pick up the difference or 5.35MHz - 4.43MHz = 924kHz between them. This "difference signal" is fed to Q208 and its output signal level can be adjusted by RV205.

Delay line DL201 can be used to adjust the Y/C signal delay in 50ns units. The signal at pin 3 of IC205 and the DUB chroma signal at pin 5 of IC205 are controlled by the control signal (DUB:H) at pin 6 of IC205, and the output voltage appears at pin 1 of IC205. The DUB chroma signal is fed from the DUB connector to 9A on the MD-25 board. It is then delayed by Q207. The delayed DUB chroma signal is fed to pin 5 of IC205.

The chroma signal, which can appear at TP212, is fed from pin 5 of IC205 to IC206 where the lower booster circuit is built in. The processed chroma signal is fed from 13A to the RP-18 board. When the EE mode of operation is specified by switch Q204, the EE chroma signal is fed through 13B to the YD-17 board. When the L:EE signal is issued, switch Q204 turns on. See Fig. 6 for further information.

The chroma REC system provides the AFC and APC loops which are correlated together. The AFC and APC loops will be described hereafter.

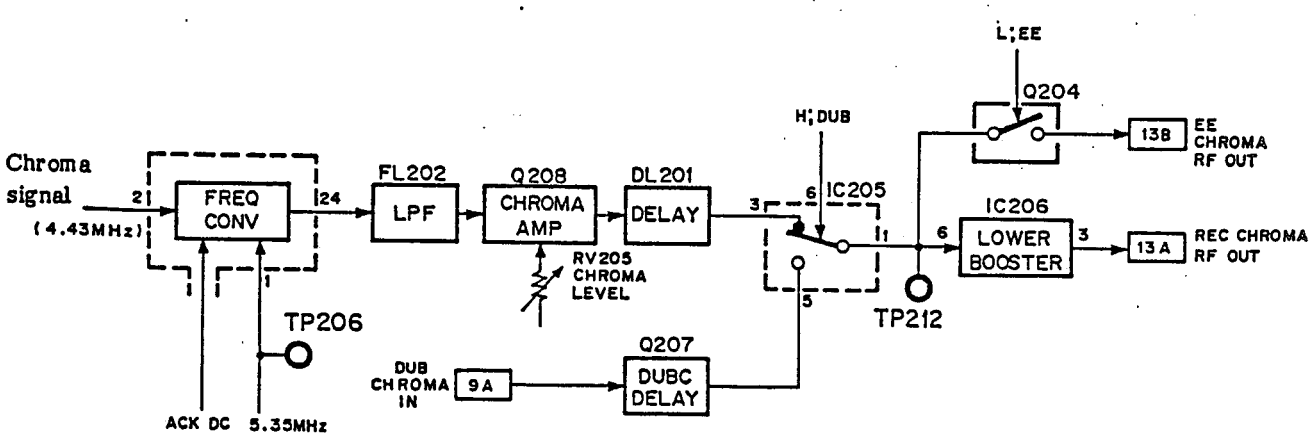

Circuit Diagram 6

<AFC system>

The Y signal appearing at TP2 is fed through pin 22 of IC204 to the sync separator. The sync signal, which can appear at TP209, is fed from pin 24 through 27B to the TC-13 board. The sync signal is also fed through the sync amplifier consisting of Q211 and Q212 to the BC-7 board.

The output signal of the sync separator in IC204 is fed to the half-H killer circuit where the auxiliary pulse is rejected to convert it into the continuous H signal. The output voltage of the half-H killer is fed to the sample-hold circuit to generate the sampling pulse. The APC LOOP IN IC204 consists of a VCO, a f/473-counter, a slope circuit and a sample-hold circuit.

The output of the VCO is locked into the the sync signal of the composite video signal being input, and this is accomplished by sampling the VCO output with the sync signal pulse. The ramp voltage waveform can appear at TP211 and the phase error voltage can appear at TP210. The VCO oscillation frequency is given by 473xfH. RV204 is used to adjust the threshold level for operating the AFC loop. The output signal of the VCO is fed to a divide-by-8 counter. This counter output is fed to the frequency converter circuit. The frequency converter output at _____ Hz is synchronized with the signal frequency fH of the video signal being input.

See Fig. 7 for further details.

The sync signal at TP209 is delayed by Q209, L204, C216 and C217 so as to generate the burst flag pulse. A low-pass filter consisting of C220, R213 and Q201 are used together to mute the burst flag pulse during vertical blanking. The burst flag pulse appearing at TP208 is fed to pin 16 of IC201 and then to the burst gate circuit. The output voltage of the burst gate circuit is a switching pulse fed to the APC detector and ACC detector error correction circuit to detect errors only while the burst signal is being issued.

See Fig. 8 for further information.

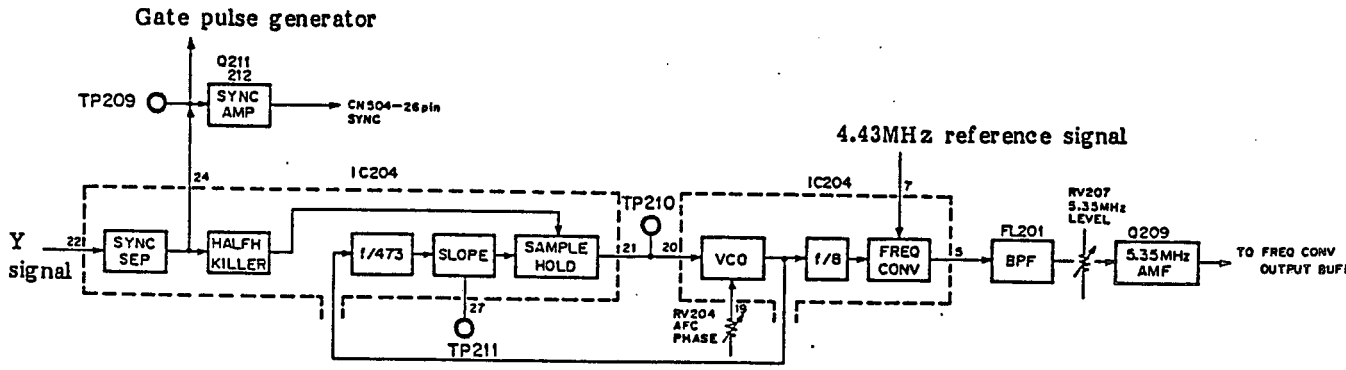

Circuit Diagram 7

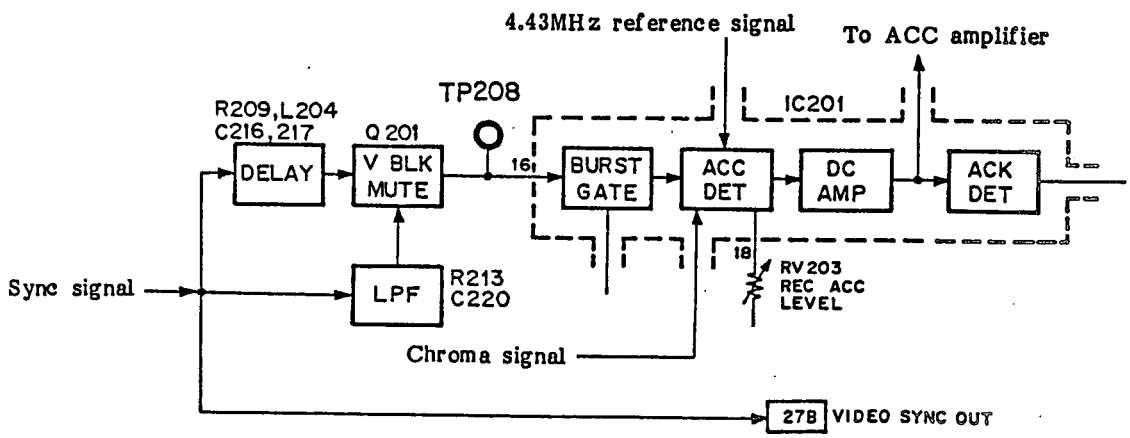

Circuit Diagram 8

<APC circuit>

The chroma signal appearing at TP205 is fed to pin 12 of IC201 and then to the chroma amplifier circuit. The output signal of the chroma amplifier circuit is fed to the APC detector circuit. The APC detector circuit compares the burst signal phase of the chroma signal being input with the phase of the VXO operating at 4.43MHz. The phase error signal voltage is fed to pin 14 of IC201 to control the VXO consisting of X201 and D203. The controlled signal appears at TP-214. The controlled signal is fed through the reference oscillator in IC201 to pin 19 of IC201. It is then fed through the reference phase shifter circuit consisting of L206, C229 and R227 to pin 15 of IC201 and also through IC201 to the VXO to establish an APC loop.

See Fig. 9 for further information.

The 4.43MHz signal locked in the phase of the chroma subcarrier being input can thus be obtained at pin 19 of IC201. RV208 is used to adjust the threshold level for APC loop operation. The bandpass filter set at the central VXO frequency or 4.43MHz consists of T201 and the signal level at 4.43MHz can be maximized by adjusting T201.

The output signal of the reference oscillator circuit is fed to the ACC detector circuit to detect the chroma subcarrier signal. In this way the chroma signal peak level can be detected. The error voltage detected by the ACC detector circuit is amplified using the DC amplifier circuit to control ACC amplifier gain. If the DC amplifier output signal level is lower than the threshold, the ACK detector circuit is used to make the color killer circuit function. The output signal of the color killer circuit is used to mute the outputs of the frequency converter circuit and chroma amplifier circuit.

The 4.43MHz signal locked at the subcarrier being input is fed from pin 19 of IC2 to pin 7 of IC204. The frequency converter generates both the 924kHz-difference and 4.43MHz-sum signals which are locked at fH. Moreover, these signals can be

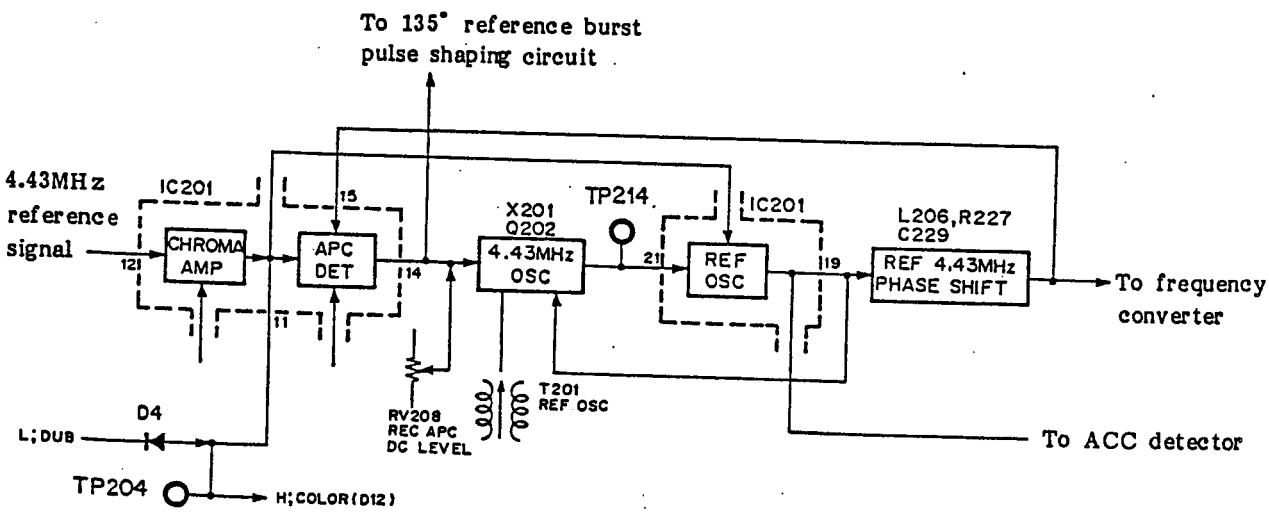

Circuit Diagram 9

issued from pin 5 of IC2. Bandpass filter FL201 is used to pick up the sum signal (4.43MHz + 0.924MHz = 5.35MHz). The 5.35MHz sum signal is synchronized with fH in the video signal being input. RV207 is used to adjust the 5.35MHz signal level. The 5.35MHz signal is fed through amplifier Q204 to pin 1 of IC201. It is fed, together with the 4.43MHz chroma signal, to the frequency converter circuit at pin 2 of IC201. At this time they are converted into the difference and sum signals at pin 24 of IC201. Low-pass filter FL202 picks up the difference signal component at a frequency of 924kHz (5.35MHz - 4.43MHz) and the low-pass filter output is fed to chroma amplifier Q208.

The 4.43MHz signal is then fed through pin 1 of IC202 to the pilot burst shaper circuit. The signal fed from pin 4 of IC202 to pin 3 of IC303 is added to the chroma signal under the control of the signal at pin 6 of IC203. LV201 is used to control the phase of the obtained signal and RV202 is used to control its level.

The sync signal is fed from pin 24 of IC2 to pin 6 of IC202 so as to form the pilot burst insertion pulse. The 4.43MHz signal with the pilot burst pulse, which appears at TP202, is fed to pin 6 of IC203. RV201 is used to adjust the pilot burst width.

See Fig. 10 for further information.

The APC error signal appearing at TP207 is fed to IC207 and then to the 135° reference burst pulse shaper circuit. The 135° reference burst pulse, which can appear at PT213, is used to detect color framing, RV206 is used to adjust the 135° reference burst pulse level. The signal at TP213 is fed from buffer Q205 through 40A to SV-52A. When the system is operating in the color mode, a DC voltage component can be superimposed on the 135° reference burst pulse (at 40A) by using transistor Q206.

See Fig. 11 for further information.

The rotary erase signal at 5.35MHz, appearing at TP-206, is fed from buffer Q203 to the RP-18 board through 15A.

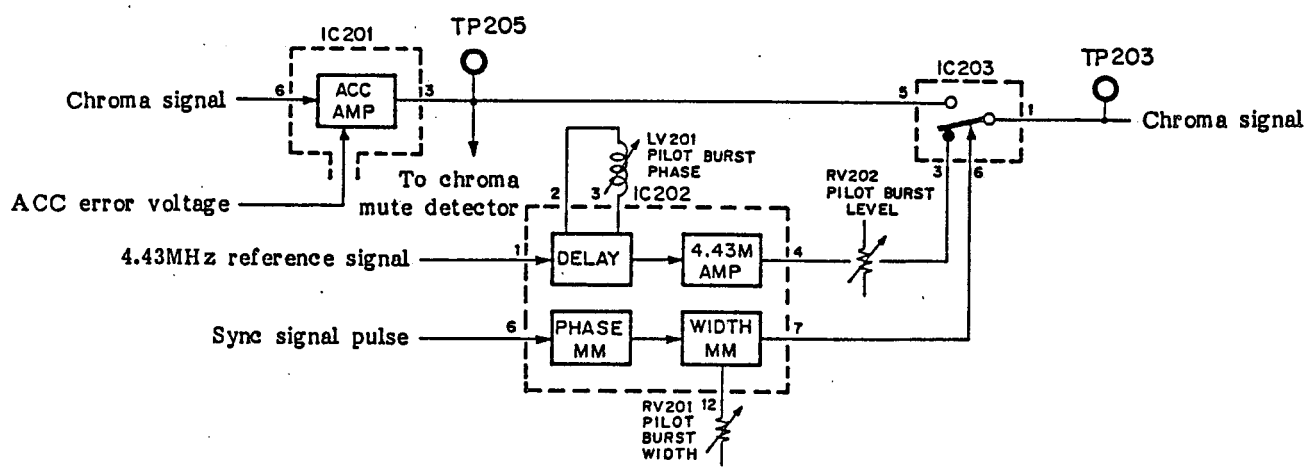

Circuit Diagram 10

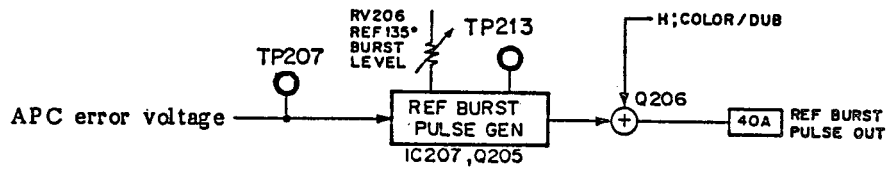

Circuit Diagram 11

YD-17 BOARD

The YD-17 board mounts the Y demodulator circuit, chroma RF separator circuit and SP detector circuit. All new circuit functions on the YD-17 board are listed below:

<Y channel>

1. Aperture correction circuit
2. PB HF circuit
3. RF switching noise suppressor circuit
4. Secondary harmonic beat canceller circuit
5. Video dropout control circuit
   (Using a CCD delay device with a delay time of 2H)
6. SP mode detector circuit

<Chroma channel>

1. PB lower booster

There are 7 new functional circuits. The operation principle behind these new circuits will be described hereafter:

1. Aperture correction circuit

   It provides the cosine-like frequency response used for peaking the response at higher frequencies to balance the responses of the heads in the A and B channels at intermediate frequencies.

   Fig. 1 shows the block diagram of the aperture correction circuit.

The response will be given by the following expressions.

$$\alpha = f(t) + f(t-2\tau D)$$
$$= Ee^{jwt} + Ee^{jw(t-2\tau D)}$$
$$= Ee^{jw(t+\tau D)} \cdot (e^{-jw\tau D} + e^{jw\tau D})$$
$$= Ee^{jw(t+\tau D)} \cdot 2\cos w\tau D$$
$$\beta = Ee^{jw(t+\tau d)} \cdot (-2k)\cos w\tau d$$
$$V\ OUT = Ee^{jw(t+\tau D)} \cdot (1-2k\cos w\tau D) \ldots (1)$$

Assume that $k = \frac{1}{2}$, and then $1-2k\cos\tau D$ becomes $1-\cos w\tau D$. It can be calculated as follows:

D	$1-\cos w\tau D$
$\pi/2$	1
π	2
$3/2$	1
2π	0

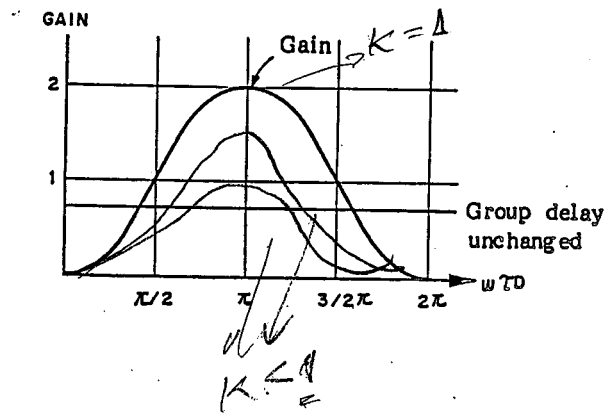

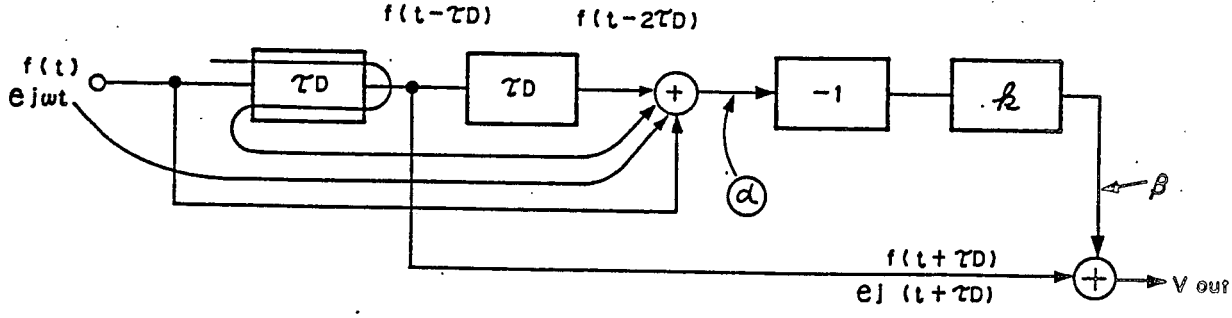

Fig. 1

Expression (1) implies that amplitude "Vout" may change with "k".

If the peak of the cosine-like response is set at a designated frequency, the frequency response at intermediate frequencies can be corrected. The aperture correction circuit has a certain group delay which is unchanged, and thus no phase distortion can occur in the RF system. Overmodulation can be protected by increasing the carrier gain at frequencies of 9MHz to 10MHz or at the white clipping point, and thus the peak of the gain is set at 7MHz or at the center of the frequency deviation.

The peak point can be determined by the delay time of the delay line.

$D=2\pi f\pi D$ and then the peak can occur at 180 degrees.

Thus, D = or = 1/2 D can be obtained.

2. PB HF CIRCUIT

The PB HF circuit has the same configuration as the aperature correction circuit.

The PB HF circuit is used to protect the Y system against overmodulation but not to suppress the frequency response. The PB HF circuit does not provide a phase adjuster. However, a gain adjuster is provided in the PB HF configuration.

Overmodulation can occur at or around 10MHz, and the peak gain is set at or around 10MHz. A delay line having fewer delays should be used. The same circuit as used in the aperture correction circuit can be used to perform this function.

3. RF SWITCHING NOISE SUPPRESSOR CIRCUIT

The switching spike is replaced by the integral signal waveform to suppress transient signals at RF switching position.

The spike energy is the same as the integral signal waveform energy.

The switching spike is replaced by the 1H-delayed DOC signal in the current version. If it is replaced by the video signal, the video signal may be issued during vertical blanking. If the tape is asynchronized with the drum lock phase during running, another defect can occur.

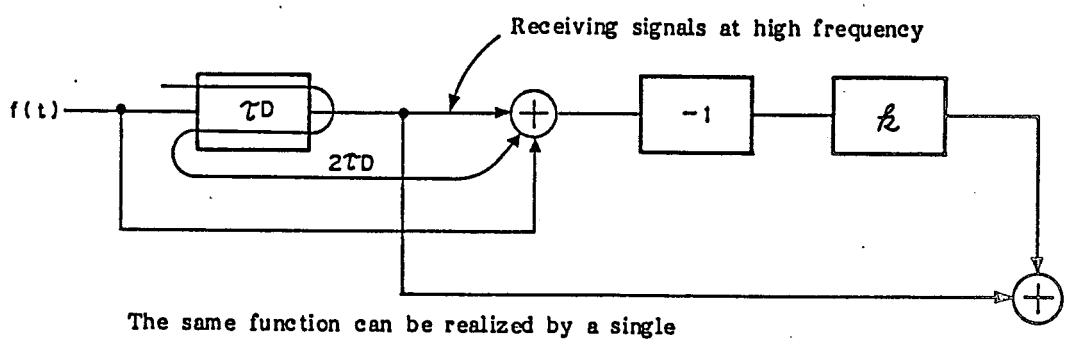

The same function can be realized by a single delay line.

Fig. 2

4. SECONDARY BEAT CANCELLER

The secondary harmonic beat is a cyclic signal with a period of 4H line time in the PAL system. Consequently a delay line with a delay time of 2H is required.

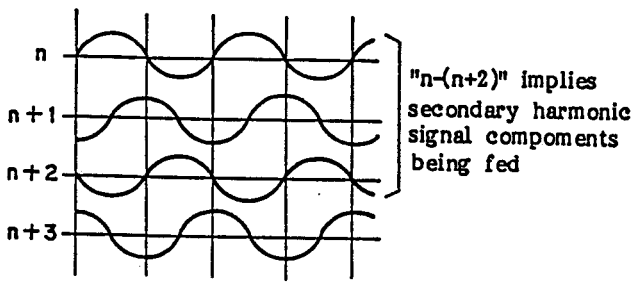

Fig. 3 Phase Relationship of the Secondary Harmonic Beat Signals

When the video signal in the 2nd line is subtracted from that in the 0th line in the reverse phase, the secondary harmonic beat component is added together. If the Y signal in a certain line is correlated to that in another line, only the secondary harmonic beat can be accumulated. This concept will be explained referring to the circuit diagram shown in Fig. 4.

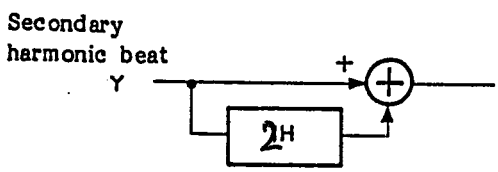

Fig. 4

for delay lines CCD products are used.

When the 2H-delayed Y signal containing the secondary harmonic beat signal is subtracted from the non-delayed Y signal containing the secondary harmonic beat signal, part of the Y signal with no correlation and the secondary harmonic beat signal can appear at the output terminal. The secondary harmonic beat signal is thus increased. If the output signal is suppressed by a limiter, no secondary harmonic beat signal can be obtained from the sum of these signals. If these signals are differentiated once, the secondary harmonic beat signal can be obtained from the sum of these signals when the differentiated signal is suppressed by a limiter.

When the sum of these signals is differentiated, the high-frequency component of the Y signal, if any, can be picked up and thus the waveform response may be degraded. (See Fig. 5)

The limiter output signal is fed to the fullwave rectifier, and the chroma envelope signal is sliced by the reference signal of a certain level. This sliced signal and the chroma decision signal are added together, to generate the other chroma decision signal used to decide whether a chroma signal is to be issued at the Y signal edge. (See Fig. 6)

The chroma decision signal is modulated by the limiter output signal in accordance with amplitude modulation. Then, only the secondary harmonic beat signal can be obtained.

The obtained secondary harmonic beat component is fed to the $\lambda/2$-correlator to eliminate the first cycle of the secondary harmonic beat signal. In a result of this circuit, when mixed with Y signal, the Y edge signal can not be cancelled.

The output of the $\lambda/2$-correlator is mixed with the Y signal to eliminate the secondary harmonic beat signal.

See Fig. 7 for further information.

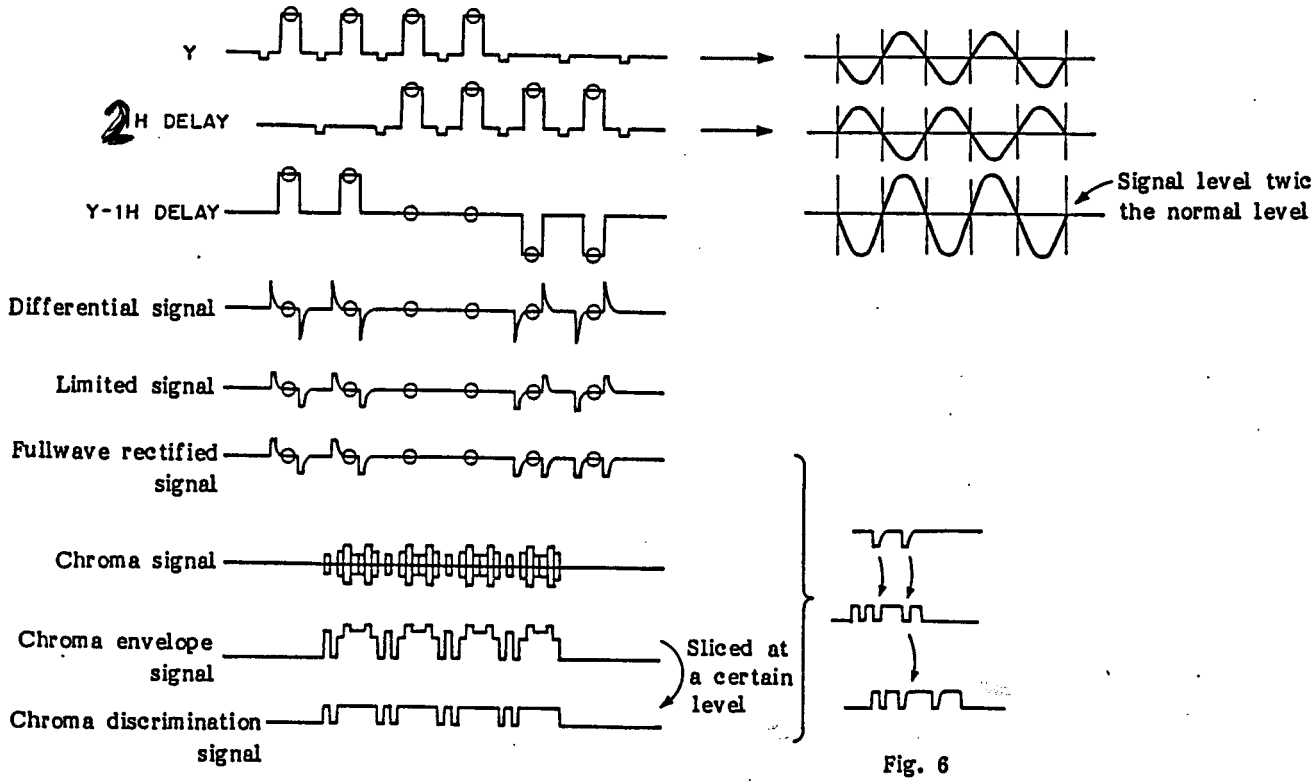

Fig. 5

Fig. 6

λ/2-correlated secondary harmonic beat

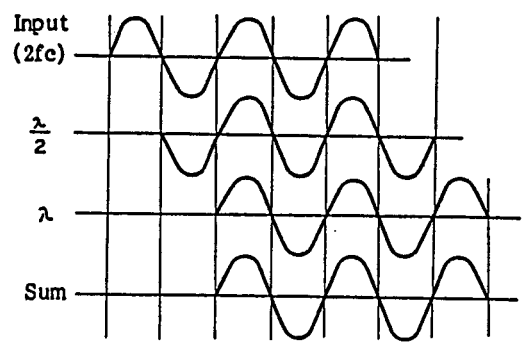

Fig. 7

5. SP/NORMAL MODE DETECTOR CIRCUIT

The Y-FM signal spectra in the SP and normal modes of operation are as shown in the illustration on the right. This illustration indicates that the sync tip carrier at 4.8MHz should be issued in the normal mode.

An SP-tape detection hole is provided in cassettes which are used in the SP mode. When the SP tape is set and the SP mode of operation is detected by sensing the sync tip carrier in the Y-FM signal, the machine can be used to perform playback operations in the SP mode. When the SP tape is set and the normal mode of operation is detected by sensing the sync tip carrier in the Y-FM signal, the machine can be used to perform playback operations in the normal mode. Moreover, this machine can be used to perform recording operations in the SP mode when an SP-tape detection hole is provided.

This operation mode is controlled by using IC6.

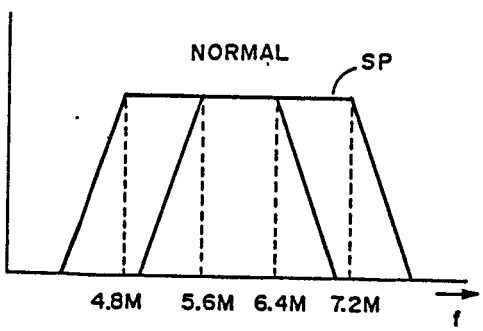

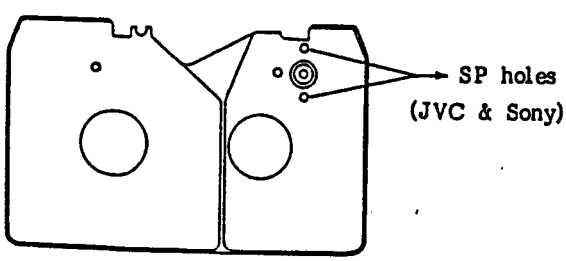

6. 2H DELAYED VIDEO SIGNAL DROPOUT CONTROLLER (CCD Type)

The dropout controller circuit (RF type) is used in the conventional 800P. The FM signal is discontinuous at the intersecting point between different dropout control signals in the conven tional version. This discontinuous point causes the machine to generate a spike which degrades the picture quality.

The video signal dropout controller is used in the SP version to improve the picture quality. The CCD with a delay time of 2H is used to control dropout in video signals as well as cancelling the secondary harmonic beat signal which can be generated in the PAL system. Thus, the circuit configuration is greatly simplified and circuit reliability is greatly improved.

<Chroma system>

7. LOWER BOOSTER CIRCUIT

The same lower booster circuit as described for the MD-25 board is provided in the PB system.

<Audio FM>

The U-matic SP is employed to significantly improve the picture quality. The new sendust head together with the built-in Dolby NR provides much better sound-signal quality because inprovement in both picture and sound-signal quality is keenly desired in broadcasting. The compact discs which are currently used in digital audio equipment have made the personal in charge interested in sound-signal quality. Thus, development of the audio Hi-Fi equipment became important. (Three- or four- channel audio equipment is said to be under development.)

Thus, the audio FM multiplex (A FM) system is planned to be developed. The tape on which (A FM) system sound signals are recorded in accordance with the audio FM system should be played back by using the BVU-850P with no problem, so the AUD-1 function is provided in the BVU-850P.

1. Benefits of the audio FM system

(1) Improves quality by reducing the distortion factor

The audio FM system causes no distortion in the transmission system. Distortion generally occurs in the filter, modulator, or demodulator. Reduction of distortion in the analog transmission system is not so easier.

(2) Exhibits superior frequency response

The audio FM system causes no signal level fluctuation in the REC and PB signals and has superior frequency response over a wide frequency range.

(3) Causes no wow & flutter

Wow & flutter which are caused by fluctuations in the tape transport, appear as background noise in the FM system. The background noise can be suppressed by increasing the frequency deviation and by applying dynamic emphasis.

(4) Employing simpler circuit configuration

(5) Making the circuits with IC easier

(6) Inexpensive

2. Audio FM multiplex system principle of operation

In the audio FM recording system, the audio signal is modulated by FM and multiplexed with the video signal (color subcarrier signal and FM Y signal) to record the frequency-multiplexed signals. The resultant signals are recorded and played back by the rotary video head.

The tape speed in the rotary head system is actually higher than that in the fixed head system. Thus, high-quality recording of the wide-band FM signal is possible.

(1) Setting the frequency in the audio FM carrier

An exclusive carrier is used to modulate the left- and right-channel signals to obtain a high-quality reproduced signal. The dynamic range of the audio signals is high, and separation between a pair of channels is perfect.

The audio FM signal bandwidth is set at 2MHz to 2.5MHz and frequency-interleaved with the video signal to reduce video signal interference with the audio signal.

The video track frequencies are given by

(n - 1/8fH).

In the SP mode, the PAL system should have the following frequencies in the audio FM system to eliminate the beat in the PB system:

2.18MHz in channel 1 ⟶

136 - 1/8fH = 2.1230462MHz

2.48MHz in channel 2 ⟶

159 - 1/8fH = 2.4824218MHz

-25dB Record current

The sparing between a pair of channels is only 300kHz, and it degrades the frequency response at high signal levels. The more the frequency bandwidth increases, the more the performance improves.

The lower carrier frequency limit is defined as 2.123MHz (136 - 1/8fH) when the minimum signal level is defined as -40dB with respect to the speak chroma signal level in the conventional mode. The higher carrier frequency limit is defined as 2.482MHz (159 - 1/8fH) when the minimum signal level is limited by the beat component in the Y signal. The high-pass filter, low-pass filter used in the conventional mode, and noise canceller circuit satisfy the above specifications.

The frequency bandwidth in the audio FM system is 100kHz in each channel.

(2) Setting the carrier for the audio FM signal

The FM-modulated audio signal frequency is located between the low-frequency converted color-difference signal subcarrier bandwidth and the FM-modulated Y-signal bandwidth.

The frequency-multiplexed audio signal is thus recorded on the video track by using the rotary video head.

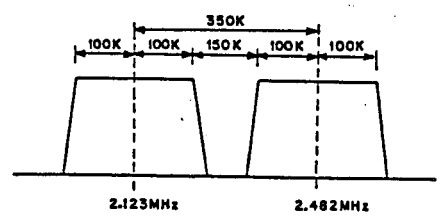

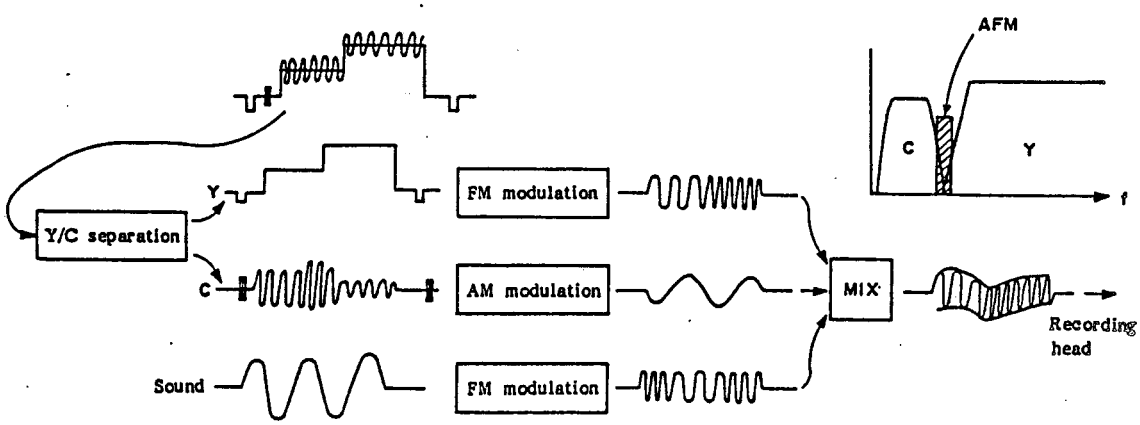

Function Blocks

This circuit's function is described below.

The PB RF signals (in channels A and B) are fed to pins 24 and 23 of IC1 through 5B and 7B, respectively. The PB RF signals are then fed to the preamplifier circuit. The EE:L signal at 12Vp-p is fed to pin 1 of IC1 to mute the output of the preamplifier in IC1. It is also fed to inverter Q2 through 38 AB and the inverter output is fed to IC1. RV-1 which is connected to pin 22 of IC1 is used to adjust the DC balancing of the operating point in the preamplifier. DC voltage, to balance the preamplifier, is fed from a DC voltage supply of 6VDC to RV-1 through voltage regulator Q1. The output signals of the preamplifier in channels A and B can appear at TP11 and TP12, respectively. They can be observed by the oscilloscope probe at TP11 and TP12, respectively.

The RF signals are switched by the switching pulse at pin 18 of IC1. The waveform of the RF amplifier output signal in channel A can be observed on the CRT oscilloscope connected to pin 17 of IC1 or TP2. The waveform of the RF amplifier output signal in channel B can be observed on the CRT oscilloscope connected to pin 16 of IC1 or TP1. RV-5 in Fig. 1 can be used to adjust the balancing of the RF chroma signals between channels A and B. The balanced RF chroma signal is fed to buffer amplifier IC2. The waveform of the buffer amplifier output can be observed on the CRT oscilloscope connected to TP9. Low-pass filter FL-1 is used to pick up the 924kHz component and low-pass filter output is fed to an audio bias trap circuit consisting of transistor Q12. The trap rejects the audio bias signal from the RF chroma signal to eliminate interference from the former to the latter while the audio signal is being inserted into the video signal. LV-1 is the adjuster used to minimize the interference from the audio bias signal to the RF chroma signal.

The lower booster circuit consisting of IC3, C17 and R25, which is used in the MD-25 board, is also used to compensate for the frequency response.

Switch IC4 selects either the PB RF chroma signal at pin 3 of IC4 or the EE chroma signal at pin 5 of IC4. The EE 12V(H) signal controls switch IC4 when applied to pin 6 of IC4. The EE RF chroma signal is fed to 7A. Delay line DL-5 is used to cause the RF Y signal phase to agree with the RF chroma signal phase. This delay line's output is fed to pin 5 of IC4. The RF chroma signal at pin 1 of IC4 is sent through 10B to the CD-29 board. (See Fig. 2 for further information.)

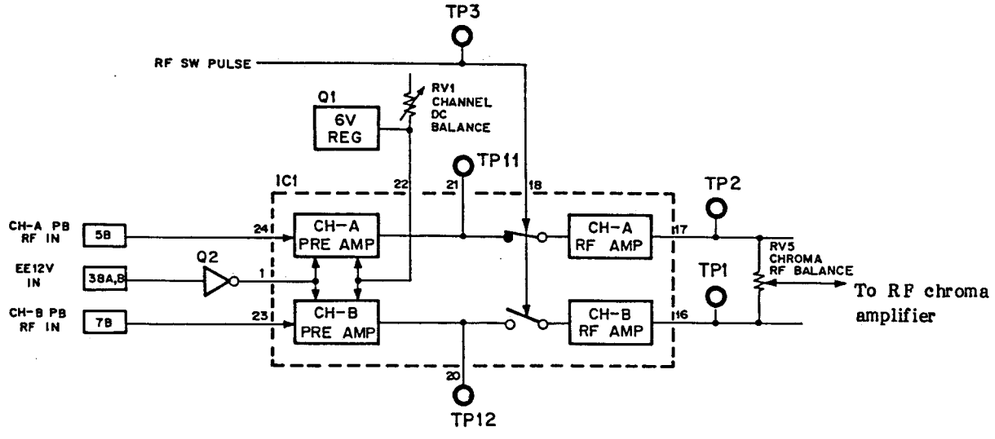

Circuit diagram 1

The RF Y signal is fed to pin 15 of IC8 in channel A and to pin 1 of IC8 in channel B. The output signals of IC8 are fed to the PB aperture correction circuit. The nondelayed RF Y signals in channels A and B can appear at pins 12 and 4 of IC8, respectively and the delayed RF Y signals in channels A and B can appear at pins 13 and 3 of IC8, respectively. The signal at pin 13 of IC8 in channel A is delayed by DL-1 with a delay time of 70ns and the signal at pin 3 of IC8 in channel B is delayed by DL-2 with a delay time of 70ns. These delayed signals in channels A and B are fed to pins 11 and 6 of IC8, respectively. The signal voltage passing through level adjuster RV8 in channel A is fed to pin 10 of IC8, and that passing through level adjuster RV9 in channel B is fed to pin 7 of IC8. These signals in channels A and B are mixed together within IC8 and they appear at pins 9 and 8 of IC8, respectively.

The PB aperture correction circuit is operated as described above and the frequency responses in channels A and B are adjusted by RV8 and RV9, respectively.

RV-10 is used to balance the RF Y signals existing between channels A and B. Therefore the difference in the responses between a pair of heads in channels A and B can be corrected by RV10. The RF Y signal is then fed to the RF equalizer consisting of Q19 and Q20 through buffer Q15. Switch controls Q19 and Q20.

The RF Y signal is then fed through RF amplifier Q16 to the low-pass filter consisting of L19, C71, C72 and C73.

The RF Y signal level is controlled by RV11. The RF Y signal passing through RV11 is fed to switch IC9. The PB RF Y signal is fed to pin 3 of IC4 and the EE RF Y signal is fed to pin 5 of IC4. Switch IC9 which is controlled by the EE 12V(H) signal selects either the PB RF Y signal or the EE RF Y signal. In the EE mode, the RF Y signal voltage input to pin 5 of IC4 can be observed on the CRT oscilloscope, connected to TP6, when output at pin 1 of IC4. The EE RF Y signal which is fed to 5A is muted by Q3 and Q4 in all modes except EE. (See Fig. 3 for more information.)

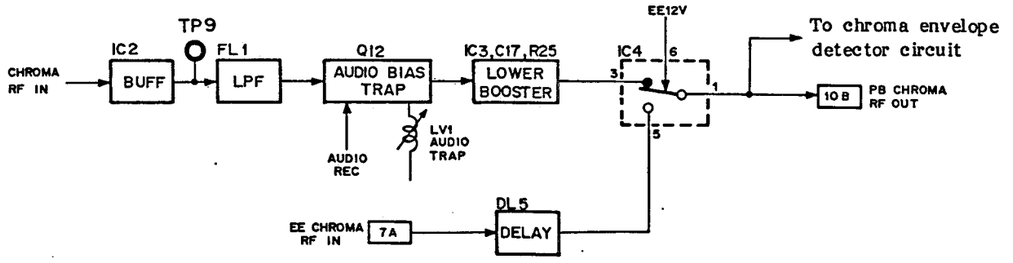

Circuit diagram 2

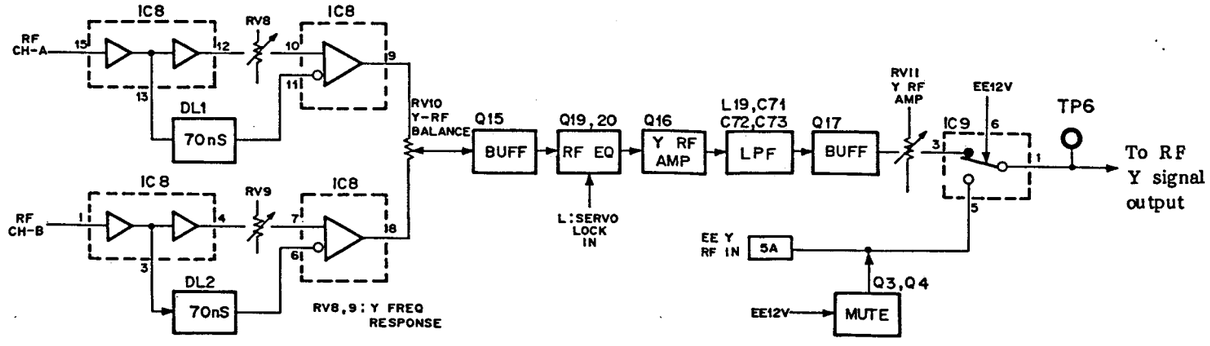

Circuit diagram 3

The muted or un-muted RF Y signal is then fed to buffer amplifier Q11 passing through TP6. In the SP mode of operation, the RF Y signal is fed to pin 15 of IC1 through highpass filter LF-3. In the conventional mode, it is fed to pin 14 of IC1 through through highpass filter FL-2 and an equalizer consisting of L10, L11, C36 and C54. IC1 is controlled by the SH(H) signal at pin 12 of IC1. In the SP mode, the RF Y signal can appear at pin 9 of IC1. IC1 contains a limiter whose output is directly connected to pin 9 of IC1. The RF Y signal at pin 9 of IC1 is fed to buffer Q9. The buffer output appears at TP7 and it can be observed on the CRT oscilloscope connected to TP7. The buffer output branches into a highpass filter and buffer amplifier Q7. The output of buffer amplifier Q7 is sent through 9A to the MD-25 board. (See Fig. 4 for further information.)

The RF signal is fed from pin 13 of IC11 to the highpass filter to compensate for the frequency response. Delay line DL-3 is inserted into the path between pins 9 and 8 of IC11 and delay line DL-4 is inserted into the path between pins 3 and 11. These delay lines are used to compensate for the frequency response, RV13 is used to balance the DC level of the amplifiers within IC11 and also acts as a carrier balancer. Transistor Q113 turns on when the EE mode is specified, and also mutes the RF Y signal in this mode. The signal voltage at pin 1 of IC11 can appear at TP8, and it is fed through pin 11 of IC101 to the limiter and FM-demodulator. A capacitor inserted into the path between pin 24 and 23 of IC101 determines the linearity of the demodulated Y signal. The Y signal at pin 21 of IC101 is de-emphasized by the de-emphasis circuit consisting of C56, C59 and R72. After this it is fed to low-pass filter FL101 to eliminate the secondary harmonic. The processed signal can appear at TP101. It is then fed through pin 19 of IC101 to the video amplifier and its output signal is fed to pin 16 of IC101. The Y signal obtained by IC101 is fed to pin 1 of IC102. Transistor Q101 within IC102 mutes the Y signal when the tape with a tape code is played back. The H:TC signal fed through 12B to IC102 is amplifed there and output at pin 6 of IC102. This signal can appear at TP102. It can be observed on the CRT oscilloscope connected to TP102.

(See Fig. 5 for further information.)

The Y signal at TP102 branches into pin 9 and pin 12 of IC101. The signal voltage at pin 9 of IC101 becomes active when the SP mode of operation is specified. In the SP mode, the signal voltage level is controlled by RV103. The signal voltage at pin 12 of IC101 becomes active when the conventional mode of operation is specified. The latter is fed through phase qualizer Q102 to low-pass filter FL102. The Y signal is fed to phase equalizer IC103 in which RV109 is used to trim phase nonlinearity in the signal waveform. The Y signal level is then controlled by RV102. The level-controlled Y signal is fed to pin 12 of IC101, and it is switched by the pulse voltage at pin 11 of IC101. The switched signal can appear at pin 4 of IC101. Phase nonlinearity is corrected by the phase equalizer consisting of Q110 and IC104 in the SP mode. The phase equalizer output can appear at TP103. The phase response can be adjusted by using LV-101, LV-102 and LV-103.

(See Fig. 6 for further information.)

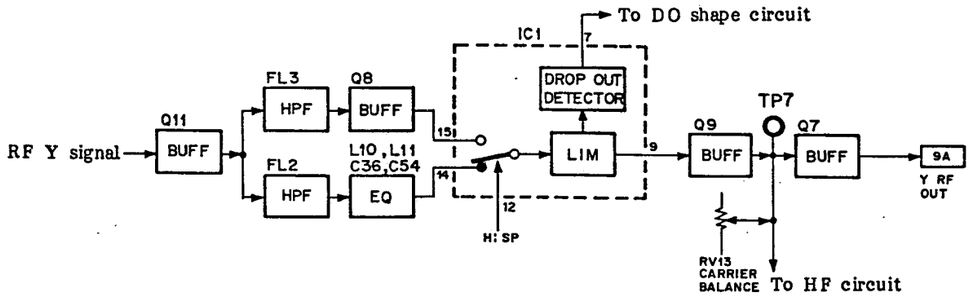

Circuit diagram 4

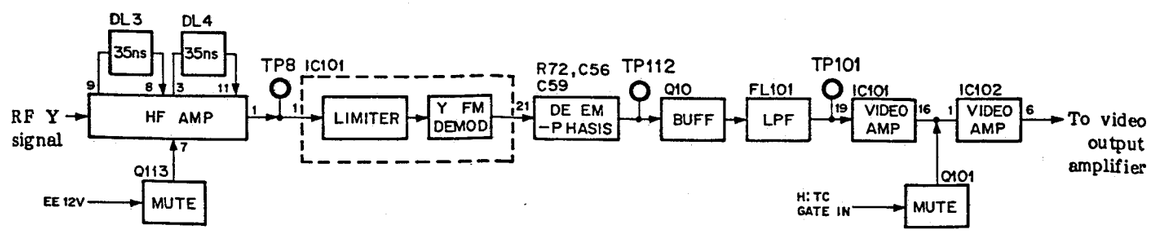

Circuit diagram 5

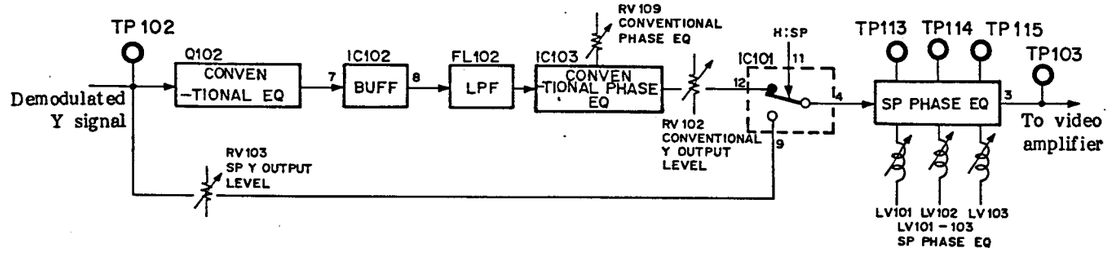

Circuit diagram 6

The obtained Y signal is fed through buffer amplifier Q104 to IC105. The pilot burst gate pulse is fed to Q103 to switch on the trap consisting of L102 and C111.

The trap consisting of L102 and C111 rejects the pilot burst signal from the horizontal sync signal. The Y signal divided by using resistors R124 and R125 is fed through Q114 to pin 6 of IC105 constituting a video dropout control switch. The 2H-delayed Y signal is fed to pin 5 of IC105. The DOC signal fed to 8 of IC105 controls the switch. IC105 provides a built-in clamp circuit to stabilize circuit operation against APL change.

The Y signal at pin 15 of IC105 is fed to pin 3 of IC107. The switching spike suppression signal generated by the switching spike suppressor circuit consisting of Q105 and IC106 is fed to pin 5 of IC107 to reduce the number of spikes during switching. The control voltage at pin 6 of IC107 which is generated by the switching pulse at TP106 is a switching transient pulse.

(See Fig. 7 for further information.)

The switching pulse is fed through 13B to buffer amplifier Q106, after which it is fed to the switching transient pulse generator consisting of Q107 and Q108. The pulse signal fed to Q109 goes high in the REC EE mode or when the servo mechanism is not locked, and it is used to mute the Y signal. The Y and chroma signals are set in phase by using Q208 and DL202. The Y/C signal passing through Q208 and DL202 is fed to pin 1 of IC205. The output signal of the secondary harmonic beat canceller, which appears at TP207, is mixed with the Y/C signal to reduce the secondary harmonic beat. The obtained signal appearing at pin 6 of IC205 is fed through 36B to the CD-00 board. It is also fed through an amplifier consisting of Q210, Q211 and Q212 to TP205 and 13A on the DUB connector.

The non-delayed Y signal at pin 1 of IC107 is subtracted from the 2H-delayed Y signal. The 2H-delayed Y signal is inverted by Q201 and then fed to mixer Q202. RV201 is an adjuster used to make the 2H-delayed Y signal level equal to the non-delayed Y signal. The Y signal which has no correlation with the secondary harmonic beat can be observed on the CRT oscilloscope connected to TP201. The Y signal is then fed to limiter IC201 to limit its amplitude. It is then fed to pin 7 of IC202 passing through buffer amplifier Q203. The buffer amplifer output is rectified and the negative-going signal component is reversed to make it positive. RV203 is used to balance both the positive-going and negative-going signals, and RV204 is used to determine the threshold level for slicing the negative-going signal. The Y signal which has no correlation with the secondary harmonic beat component can appear at TP206, and it can be observed on the CRT oscilloscope connected to TP206. The Y signal is fed to pin 13 of IC203 so that the chroma signal obtained through envelope detection, and appearing at pin 9 of IC202, is correlated to the Y signal fed to pin 13 of IC202. The secondary harmonic beat component is being issued only while the chroma signal is being issued. Thus, the Y signal is correlated to the chroma signal through chroma signal envelope detection. RV-205 is used to determine the clamp signal level. Part of the signal, while the secondary harmonic beat component is being issued, can appear at TP202. It is fed to pin 2 of IC203 and pin 5 of IC203. The Y signal which has no correlation with the secondary harmonic beat component is amplitude-modulated with the secondary harmonic beat component. That is, only the modulated secondary harmonic beat component can appear at pin 1 of IC203, and it can be observed on the CRT oscilloscope connected

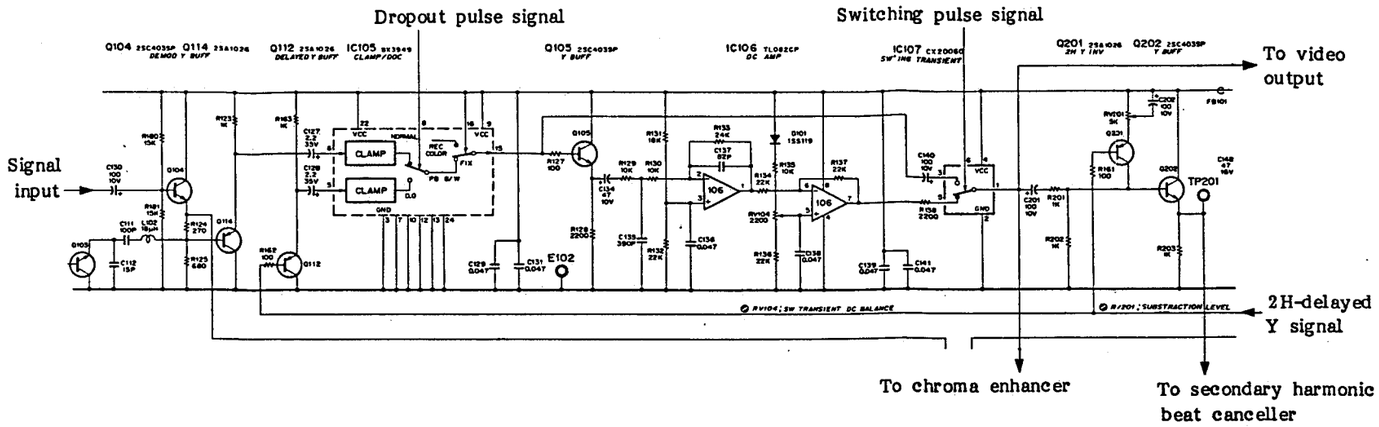

Circuit diagram 7

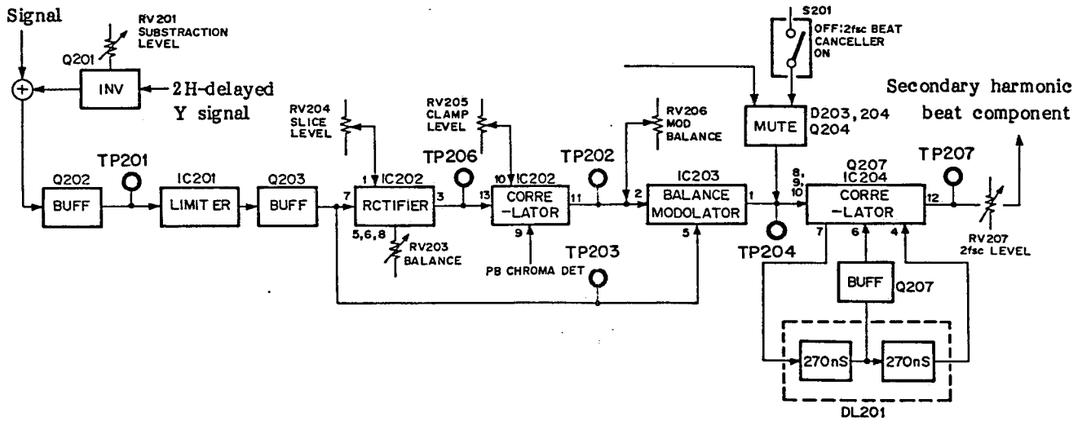

Circuit diagram 8

to TP204. It is fed to pin 8 of IC204 so that the secondary harmonic beat component is correlated to the horizontal sync signal. Only the secondary harmonic beat component can appear at pin 12 of IC204. The horizontal correlation function circuit in the correlator establishes correlation between adjacent lines by using the $\lambda/2$ delay lines with a delay time of 270ns ($\lambda/2$) for the secondary harmonic beat component (924kHz x 2 = 1.8MHz).

The correlator output signal can appear at TP207 and it can be observed on the CRT oscilloscope connected to TP207. RV207 is used to adjust the correlator output signal level. The level-controlled beat signal is fed to pin 3 of IC205. The secondary harmonic beat canceller is turned off by turning off S201. The level-controlled beat signal is muted in the EE mode of operation or when the servomechanism is unlocked.

(See Fig. 8 for further information.)

The dropout control process amplifier consisting of IC110 and IC111 is used to replace the sync signal with the 2H-delayed Y signal if noise is found in the sync signal component of the Y signal or if dropout has occurred in the Y signal. The non-delayed and 2H-delayed Y signals appear at pins 14 and 16 of IC110, respectively. The horizontal and vertical sync signals, which are separated by IC110, can appear at pins 1 and 2 of IC110. The obtained signals are fed to pins 15 and 11 of IC111 so as to generate both horizontal and vertical blanking signal pulses, respectively. RV-108 is used to adjust the horizontal blanking signal level and RV107 is used to adjust the vertical blanking signal level.

The Y signal at pin 10 of IC111 is clamped by the horizontal sync pulse fed t pin 15 of IC111. If noise, lower than the pedestal level has been generated, pulses can appear at pin 2 of IC111. Pulse voltages are fed to pin 7 of IC10 through switch S101. After this, they are superimposed on the dropout control pulse.

(See Fig. 9 for further information.)

The dropout pulse detector is located within IC10. The RF envelope signal appearing at pin 7 of IC10 can be fed to pin 9 of IC10. The RF envelope signal at pin 9 of IC10 is fed to the dropout detector so as to shape the pulse waveform. RV12 is used to adjust the sensitivity of detection. The dropout detector output is mixed with the dropout compensation process pulse fed to pin 7 of IC10. The mixed signal is fed to the inverter circuit. The inverter output appearing at pin 8 of IC10, which is used as a guard-band pulse,

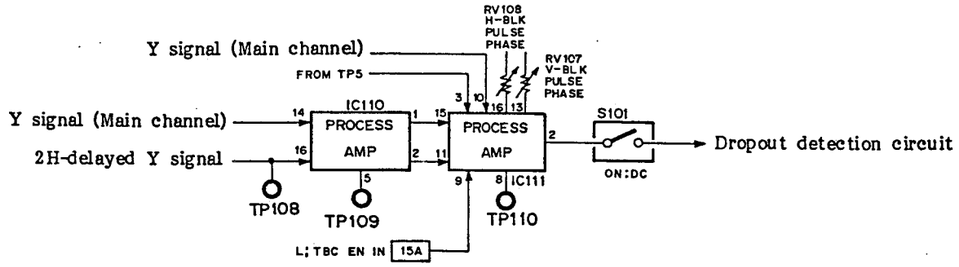

Circuit diagram 9

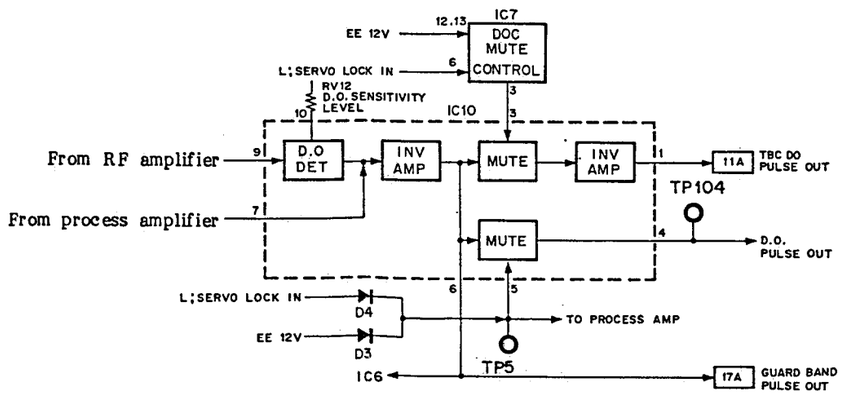

Circuit diagram 10

is fed to 17A and IC6. In IC6, the guard-band pulse can appear at pins 1 and 4 of IC10 passing through a pair of muting circuits, respectively. The guard-band pulse at pin 1 of IC10 is fed to the TBC DO pulse input terminal or 11A. The guard-band pulse is muted by the H:12V pulse in the EE mode or it is muted when the servo-mechanism is locked. The muting circuits can also be controlled by the control signal at pin 3 of IC10.

The guard-band signal appearing at pin 4 of IC10 is fed to pin 8 of IC105 passing through TP104 so that it can be used to control the VTR as a dropout pulse. It is also muted by the control signal at pin 5 of IC10. That is; it is muted by the H:12V pulse in the EE mode or it is muted when the servomechanism is unlocked.

(See Fig. 10 for further information.)

The RF signal is fed from the PB HF circuit to the demodulator and SP/normal mode detector consisting of IC5 and IC6. The RF signal is fed to pin 16 of IC5, and then to LV-2 while being tuned to the sync tip carrier frequency of 4.8MHz in the normal mode. The RF signal after passing through LV-2 is fed to the demodulator. The demodulator output signal waveform tuned to the sync tip carrier frequency can appear at TP4.

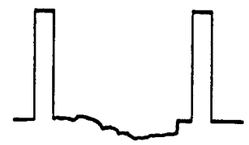

Unless the sync tip carrier used in the normal mode is detected in IC5, the L:SP signal appears at pin 3 of IC5 and is fed to IC6 to check if the carrier is generated in proper time.

As illustrated in Fig. 11, the carrier is stopped when the guard-band pulse is generated with the servomechanism unlocked, or when vertical blanking exists. The tape hole detection signal is fed to pin 6 of IC5 and then the SP:H signal is fed from pin 2 of IC6. The H:AFM signal which is fed to Q19, and the inverted SH:H signal are AND'ed together to generate the H:SP CONF signal. The generated H:SP CONF signal is used to switch the RF chroma signals on the CD-29 board so that the cutoff frequency of the low-pass filter is set to low for the A FM signal. This is because a high cutoff frequency will cause A FM signal interference due to the beat between the A FM and chroma signals.

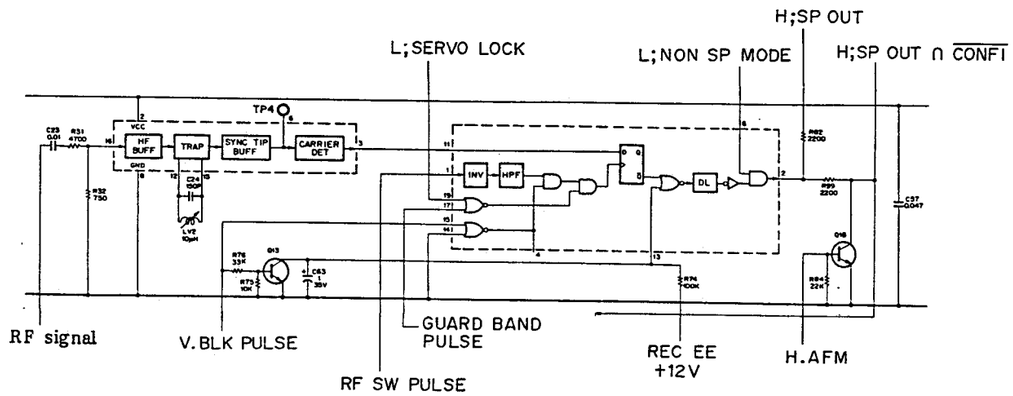

Fig. 11

CD-29 BOARD

The CD-29 board mounting the chroma signal demodulator system contains the following compensation circuits as well as the Y noise reduction system.

<Chroma system>

1. Chroma resolution correction circuit
2. New type of differential gain compensation circuit
3. High-speed ACC circuit
4. Chroma enhancer

<Y system>

1. Feedback HF preemphasis circuit
2. Farrajo-type noise canceller circuit

These circuit functions will be described below:

(1) Sharpness is improved by enhancing the chroma resolution.

The frequency response of the camera output signal or signal generator output signal is as shown below:

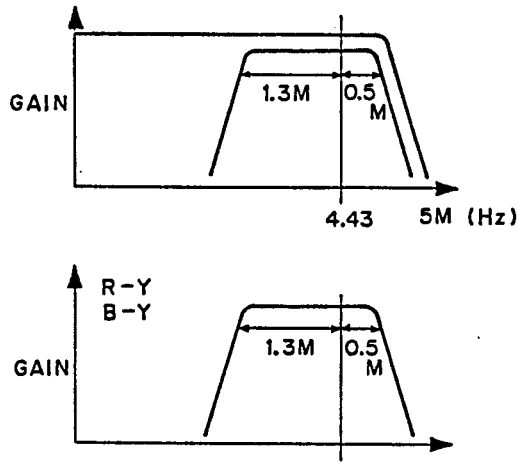

Fig. 1 Chroma Signal Bandwidth

The chroma signal bandwidth is spread as much quantitatively as the Y signal carrier level is increased during operations in the SP format. This is one of the advantages of the SP format.

The chroma signal bandwidth in conventional VTRs is limited to ±500kHz for the recording of video and audio signals according to a defined format. (See Fig. 2.)

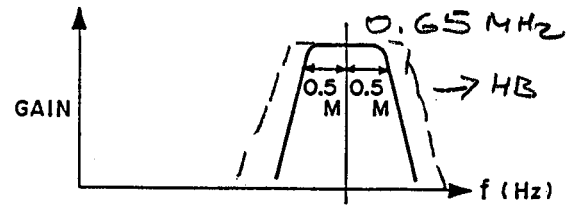

Fig. 2 Chroma Signal Bandwidth in the Current VTR System

If these signals are transmitted while a single side-bandwidth is being set equal to the sidebandwidths of the signal generator, information contained in the high-frequency side-bandwidth, where chroma signals change abruptly, increases and colors the images having clearly defined edges.

(2) New differential gain compensation circuit

The chroma signal is superimposed on the Y FM signal in the electromagnetic conversion system, and two carriers are recorded on tape. Thus, the biasing effect can occur and the differential gain is degraded. (See Fig. 3.)

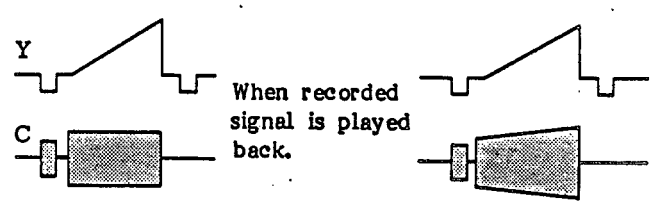

Fig. 3

The difference in the Y signal, between the left- and right-most edges of the horizontal period in the video signal, affects the PB chroma signal output change, and causes the white level to be extended.

The differential gain is normally increased by amplifier non-linearity, but the amplifier in he REC system exhibits superior linearity. The differential gain is predominately increased by the non-linearity of the electromagnetic conversion system. The Y signal is thus modulated by the Y signal's complement to get it back to the original non-sag signal in the differential gain compensation circuit.

The Y signal modulated by the sag signal has an increased differential gain, and it cannot be balanced by the converter. Thus, the 5.35MHz signal component is sent, and it causes picture frame interference. If the converter is balanced at A, converter balance is lost as the specified point changes to B. That is; interference increases as the specified point changes from A to B. The new type of differential gain compensation circuit uses a new integrated circuit to eliminate this type of sag. Moreover, interference can be eliminated by using the external adjuster.

The current PAL machine uses a conventional differential gain compensation circuit, in which Y signal sag is eliminated by a transistor before the Y signal is fed to the converter.

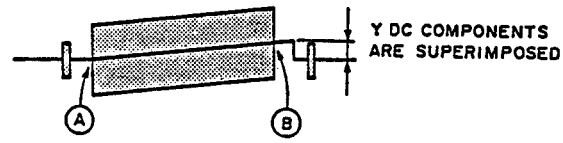

(3) High-speed ACC circuit
<800 system>

The RF signal frequency may drastically change, within a single field time, in the current 800 system, and the ACC cannot follow this frequency change. Errors caused by fluctuations at the contact point between the tape and head are detected every H time period, within a single field, in the new SP system. The detected error is sampled and hold by the APC gate pulse to obtain a correction signal. The correction signal is multiplied by the chroma signal in the main channel to compensate for the error until the response waveform becomes flat.
(See Fig. 5.)

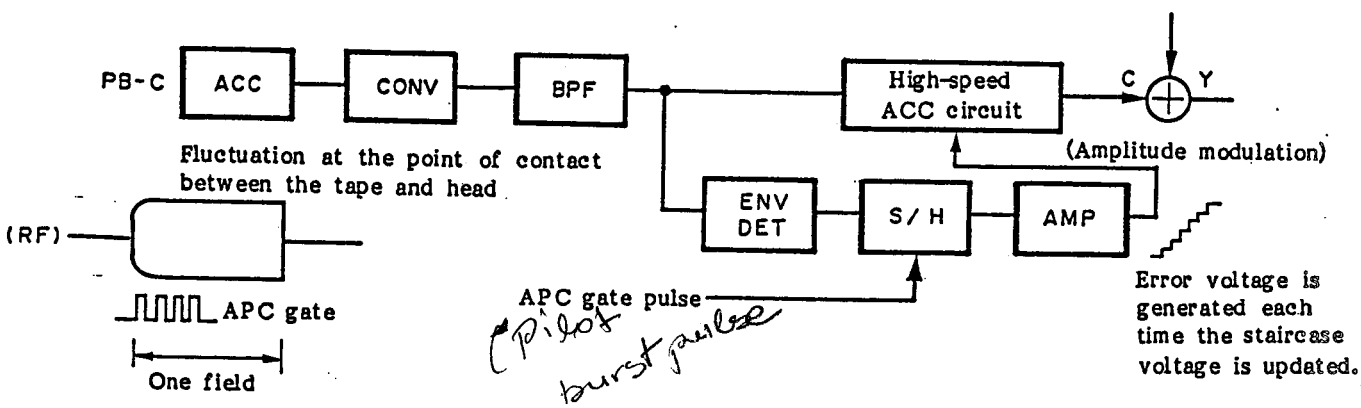

Fig. 5 Block Diagram

(4) Chroma enhancer

The chroma enhancer is used to compensate for the contour of the chroma signal.

When the chroma signal becomes sharp due to the wide bandwidth of the Y signal, the picture also becomes sharper. If the edge component of the chroma signal is added to the non-processed chroma signal, the obtained chroma signal approaches the ideal signal.

A chroma signal with enhanced edges can be generated in the following manner.

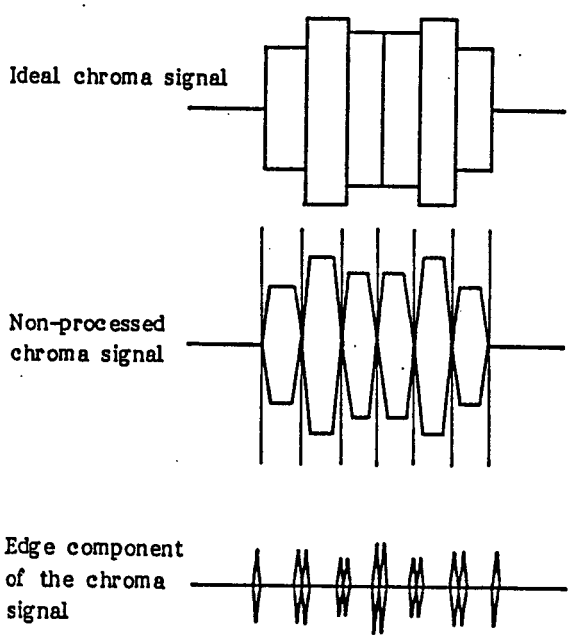

Fig. 6

The chroma signal passes through the 2-delay line and then the part of the chroma signal with no self-correlation between adjacent lines in the horizontal period can be obtained as shown in Fig. 7.

The high-frequency component cannot be reproduced only by mixing the chroma signal with the correlator output signal. If the obtained signal is modulated by the Y signal, frequency components much higher than 1.5MHz or the upper boundaries of the chroma frequencies can thus be obtained.

The modified chroma signal obtained by summing the non-delayed and $\lambda/2$-delayed chroma signals and the edge signal are amplitude-modulated by the Y signal. The obtained signal is added to the main chroma signal after passing through the phase adjuster.

The above process is performed by the chroma enhancer circuit.

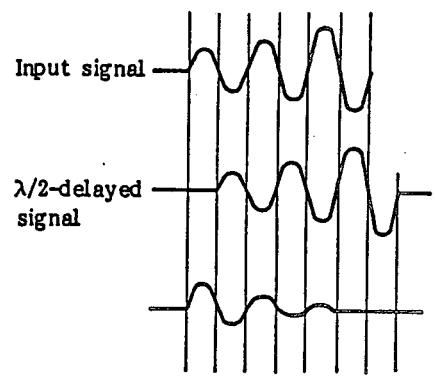

Fig. 7

Y-CHANNEL NOISE ELIMINATOR SYSTEM

Two types of noise eliminator circuits are used to improve the signal-to-noise ratio in the U-matic SP system. One is used to eliminate noise in the high-frequency preemphasis circuit, and the other is of the new type used in the waveform distortion correction circuit.

1. High-frequency Preemphasis

The U-matic SP system should be compatible with the BVU-800. The high frequency preemphasis circuit thus requires a noise eliminator circuit.

The illustration below shows the circuit configuration of the noise eliminator. It can compensate for noise generated by the preemphasis circuit when it is arranged in a negative feedback loop.

When amplifier open-loop gain A is much greater than unity, Vo = 1/G .Vi can be obtained. Waveform distortion can thus completely be eliminated if A = ∞.

Why the proposed method is superior.
The same preemphasis circuit used to enhance the high-frequency component is used in a feedback loop of the noise eliminator circuit. Thus, no distortion occurs in a record-playback loop.

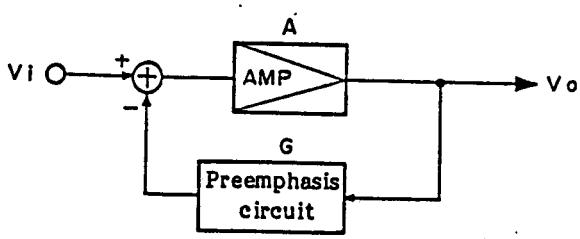

2. New Type Noise Eliminator

This type of noise eliminator is used to reduce smearing in large amplitude chroma signal edges.

<Principle of operation>

Demodulated Y signal A passes through the high-pass filter, after which it is fed to an inverted amplifier. The inverter output is fed to a buffer to obtain signal C, and the high-pass filter output is fed to another buffer to obtain signal B. Signals B and C are fed to their respective limiters to obtain modified Y signals D and E, respectively. These modified Y signals (D and E) are balanced by the adjuster to generate no video voltage F containing unbalanced noise. This noise is not eliminated and thus it is delayed by degrees to correlate it with noise contained in signal A. These signals are then added together to obtain signal G.

<Features>

Noises limited by their respective limiters are not of the same strength and therefore waveform distortion can occur immediately after the chroma signal edges. However, these waveforms are fewer in number than those occurring in conventional noise eliminator circuits. Thus, the number of corrections performed is much higher than that of conventional systems, and the signal-to-noise ratio is improved as the number of corrections are increased.

Reference: Operation principle of conventional noise eliminators

<Block diagram>

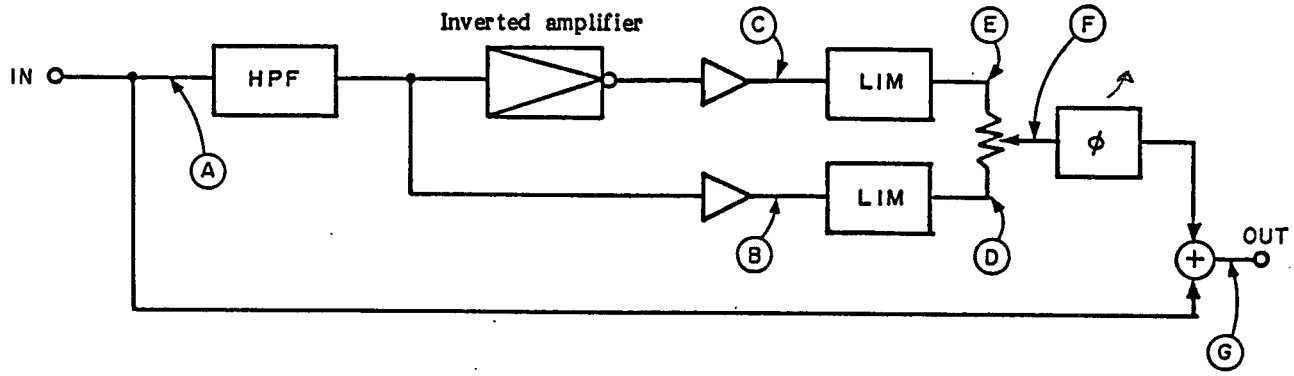

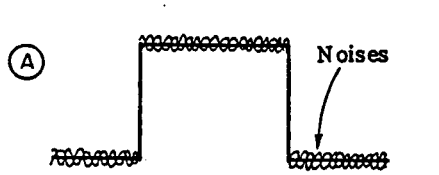

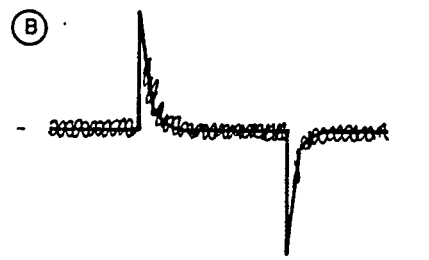

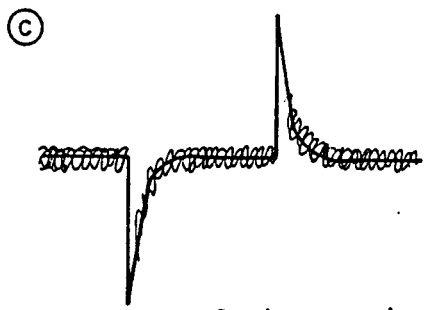

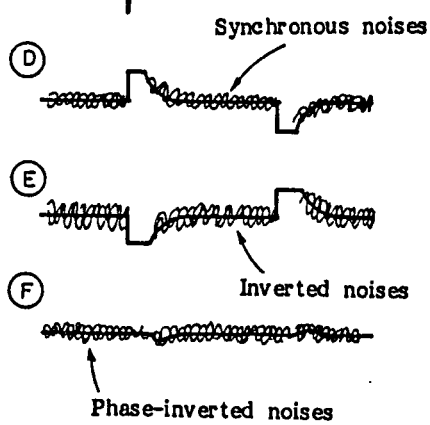

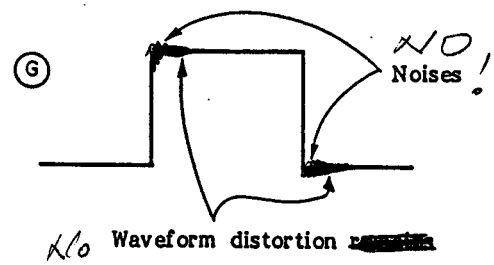

1. Noise Canceller old type

1-1) Operation Principle

Noises are picked up from the demodulated Y signal by using the high-pass filter. Then they are inverted and added to the main Y signal to eliminate noise.

The high-frequency component of the Y signal passing through the high-pass filter is dropped by limiter.

<Block diagram>

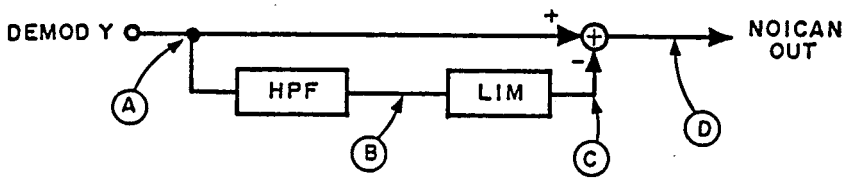

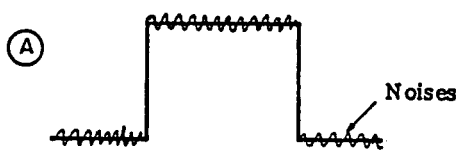

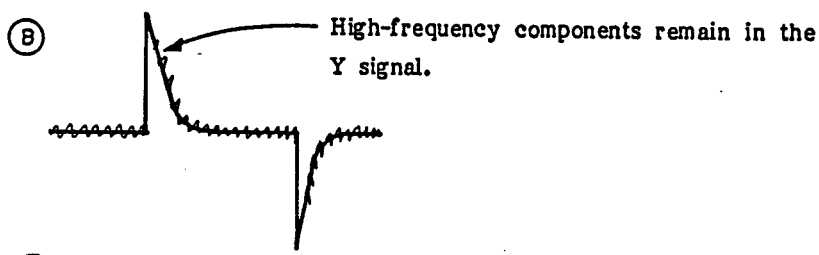

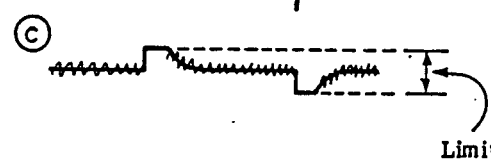

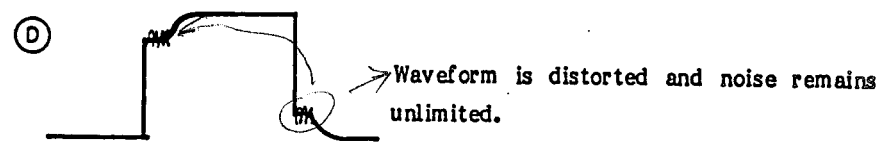

Y signals with amplitudes that are too small to limit are recognized as noise and eliminated.

2. High-Frequency Preemphasis Circuit

This circuit is used to improve waveform responses and to reproduce high-frequency signals.

2-1) Operation Principle of the High-Frequency Preemphasis Circuit

The level of the Y signal passing through the limiter is reduced by the noise eliminator. This reduced Y signal is increased by the same level as it was reduced by the noise eliminator before it is recorded. Therefore, the Y signal waveform passing through the noise eliminator is approximately the same as that of the original Y signal. This operation is performed by the high-frequency preemphasis circuit.

<Block diagram>

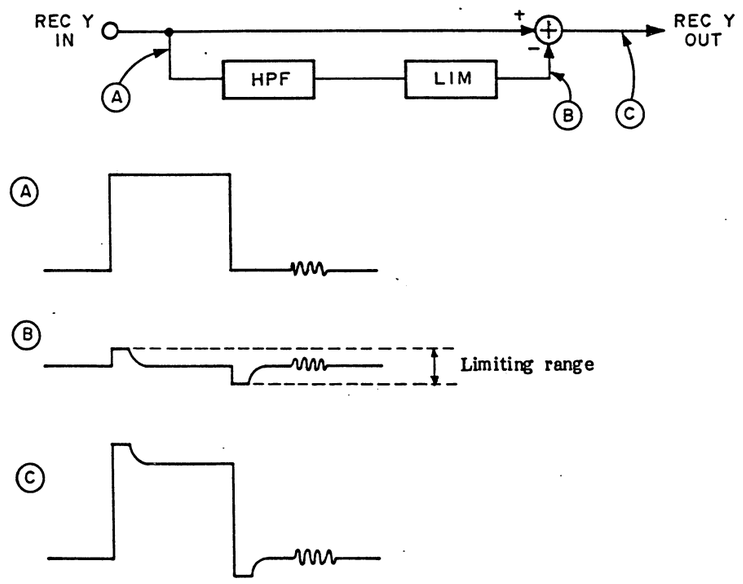

Function Blocks

The block diagram of the high-frequency preemphasis circuit is described below.

The PB RF chroma signal (at 924kHz), separated from the composite video signal on the YD-17 board, is fed from 10A to RF chroma amplifier IC1. The PB RF chroma signal appearing at pin 6 of IC1 branches into 2 routes. One is fed to pin 13 of IC2 through RV1, and the other to pin 7 of IC1 through RV25.

IC2 contains the time code detector circuit. RV1 is used to adjust the time code signal level at TP1. The PB RF chroma signal in the first route is fed to the waveform shape circuit passing through TP1. At this time if appear at TP23 passing through the two-stage MM. The horizontal sync pulse appears at TP23 only when the time code is sent. The horizontal blanking pulse appears at pin 9 of IC2, and IC2 can operate only in the horizontal blanking period.

The PB RF chroma signal is fed to pin 7 of IC1 through RV25. RV25 is used to adjust the PB RF chroma signal level. It is fed to delay lines DL1 and DL2, having 50ns interval internal taps, through buffer amplifier Q33. The Y and chroma signal phase difference can be adjusted in ±25ns steps. The PB RF chroma signal passing through an internal tap of DL1 is fed to pin 3 of IC3 in the SP mode. The PB RF chroma signal passing through an internal tape of DL2 is fed to buffer amplifier Q34 in the conventional mode. The output of buffer amplifier Q34 is fed to low-pass filter FL1 which limits the frequency bandwidth to ±500kHz. The phase equalizer for the low-pass filter consists of Q36 and Q37. RV2 connected to Q38 is used to adjust the difference in delay times between the Y and chroma signals in the conventional mode. Signals passing through Q38 are fed to pin 5 of IC3 which constitutes a signal switch. After this, the output of IC3 appears at pin 1 of IC3. Switch IC3 is controlled by the DC voltage appearing at pin 6 of IC3. This DC voltage is generated by the SP:H signal fed to inverter Q12 through 29A, and it can appear at TP2. Noise in the chroma signal is muted by Q3 while the time code is being sent.

(See Fig. 1.)

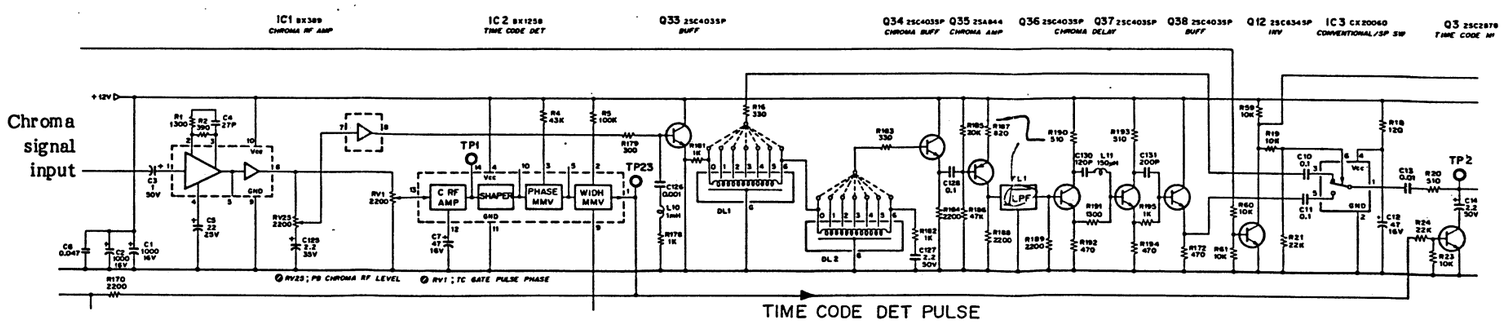

Circuit diagram 1

The chroma signal appearing at TP2 is fed to pin 5 of IC4 after which it is fed to the automatic chroma control (ACC) amplifier used to automatically maintain the chroma signal level.

The output of the ACC amplifier appearing at TP3 is fed to pin 1 of IC6 to perform amplitude modulation. RV7, inserted between pins 1 and 4, is used to adjust DC balancing in balanced modulator IC6.

The Y signal is fed from 16A through buffer amplifier Q4 to clamping amplifier Q5 where the Y signal is clamped at the pedestal level by the burst pulse. The clamped Y signal is fed to Q7 and its level compared with the reference level used to slice the sync signal component. The Y signal with no sync signal component branches into two routes: one leads to the differential gain comparatorent amplifier, and the other to the chroma enhancer. RV5 is used to minimize the differential gain in the SP operation mode when the Y signal is fed to the differential gain comparator amplifier. The Y signal is then switched by Q45. The muting circuit used together with the differential gain compensator, which mutes the comparator output in the EE mode, consists of Q8. This signal is driven by Q9, and then fed to pin 8 of IC6. The Y signal to be compensated can appear at TP22. RV6 is used to adjust the gain of amplifier IC6 to set the ACC amplifier output level at a proper value.

(See circuit diagram 2.)

The chroma signal with corrected differential gain which appears at pin 6 of IC6 is fed to buffer amplifier Q11. The buffer output branches into two routes. One leads to the DUB system passing through IC5 and the other leads to the main system passing through IC4. The chroma signal at pin 11 of IC5 is fed to pin 7 of IC5 through delay lines FL4 and DL3. Delay line DL3 has taps in 50ns steps and can be used to adjust the delay time of the DUB chroma signal with respect to the Y signal.

The signal appearing at pin 7 of IC5, passing through level adjuster RV3, is fed to pin 2 of IC5. The chroma signal is muted by the L: color signal at pin 4 of IC5 when the color is not specified. The output signal of IC5 is fed to 31B.

The 924kHz chroma signal appearing at TP4 is fed to pin 3 of IC4 which converts the 92kHz into 4.43MHz, and the 4.43MHz signal can appear at pin 24 of IC4.

The time-base jittering signal at 5.35MHz is fed to pin 1 of IC4.

The signal voltage at pin 24 of IC4 is fed to bandpass filter FL2 to pick up the 4.43MHz signal component. The 4.43MHz signal component is fed to pin 13 of IC4, then amplified by the chroma amplifier in IC4. The chroma amplifier output at pin 11 of IC4 is also fed to the ACC detection controller circuit, APC detector circuit, and the reference oscillator circuit in IC4. The chroma amplifier output at pin 11 of IC4 can appear at TP5. The chroma signal is then fed to chroma buffer Q15 and integrated by C34 and R63 which are connected to the base of Q13. That is; this chroma signal is fed to the chroma detector circuit consisting of Q13. The chroma signal detected by Q13 is inverted and muted by Q14.

(See circuit diagram 3.)

The signal voltage at pin 5 of IC14 is gated by the burst flag signal at pin 6 of IC14 and only the burst signal can appear at pin 1 of IC14. The resultant burst signal is fed to pin 5 of IC15 to perform phase detection by using the reference signal at 4.43MHz from the oscillator. The phase detector output is fed to buffer amplifier Q28, then the buffer output can appear at TP17. A positive-going pulse can appear in the 135-degree burst signal phase, and a negative-going pulse can appear in the 215-degree burst signal. The output pulse signal is fed to 21A.

(See circuit diagram 4.)

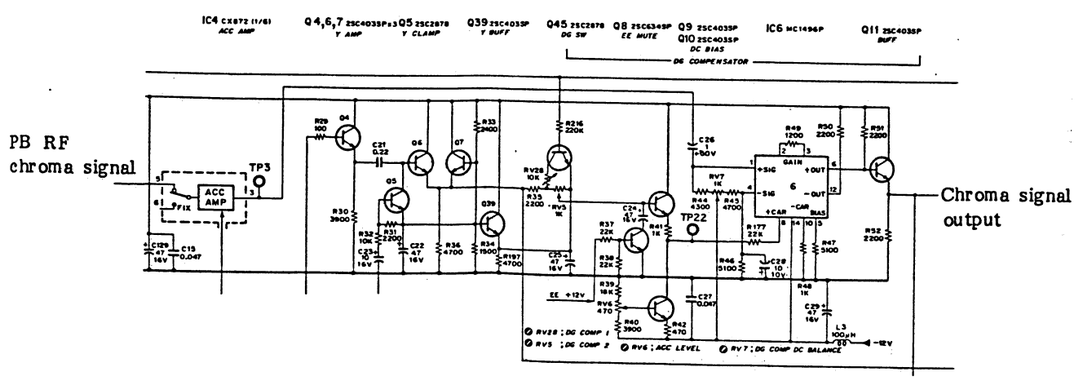

Circuit diagram 2

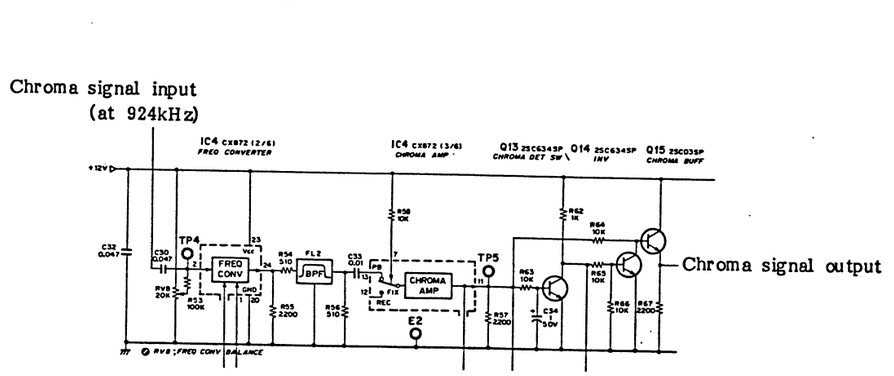

Circuit diagram 3

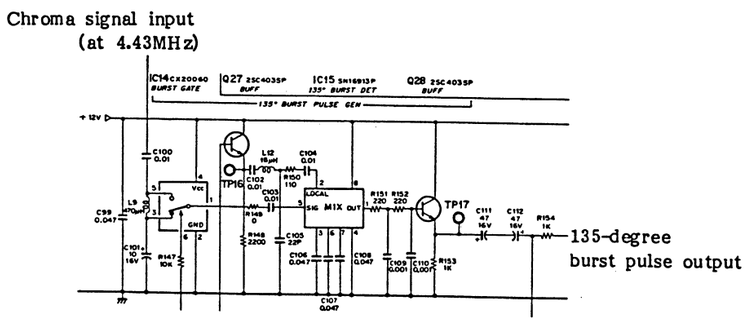

Circuit diagram 4

The 4.43MHz signal can be obtained by shifting the signal at pin 19 of IC4 (appearing at PT16) by the phase angle determined by L12 and C105 so the 4.43MHz signal is in phase with the 135-degree burst signal. The 4.43MHz signal is fed to pin 3 of IC7 through chroma buffer Q15. The pilot burst pulse is fed to pin 6 of IC7 to eliminate the pilot burst pulse. The PB RF chroma signal with no pilot burst pulse can appear at pin 1 of IC7.

This PB RF chroma signal is fed to pin 5 of IC9. The high-speed ACC circuit detects the PB RF chroma signal at pin 11 of IC8 by envelope detection. The detected signal is sampled by the APC burst flag pulse fed to pin 7 of IC8, and the sampled signal is held to take envelope data into the system. This signal is fed to pin 13 of IC8 to amplify the envelope data, and the amplified signal is fed to Q16. Q16 is used to mute the chroma signal in the high-speed ACC loop when a dropout control pulse is fed while the TBC is connected to the VTR or during the vertical blanking period.

The error signal appearing at TP6 is fed to pin 2 of IC9 through RV10 which is used to correct the signal level, then the high-speed ACC circuit can operate. The chroma signal at pin 1 of IC9 is fed to buffer amplifier Q17. The buffer amplifier output appears at TP7.

(See circuit diagram 5.)

The chroma signal appearing at TP7 is fed to Q308 and delayed by /4 at 4.43MHz while passing through LV301. The delayed signal is fed to pin 11 of IC301 which constitutes a buffer amplifier. The buffer amplifier output appears at pin 8 of IC301 and is added to the chroma signal in the main channel by using RV301. RV301 is used to balance the buffer amplifier output and chroma signal in the main channel. Changes in the chroma signal level are detected and fed to pin 1 of IC301. The chroma signal changes are amplified there and their amplitudes are limited by RV302. Diodes D301 and D302 are connected to pin 5 of IC301. The signal voltage at pin 6 of IC301, which can appear at TP302, is fed to multiplier IC302 which modulates the chroma signal with the high-frequency component of the Y signal.

(See circuit diagram 6.)

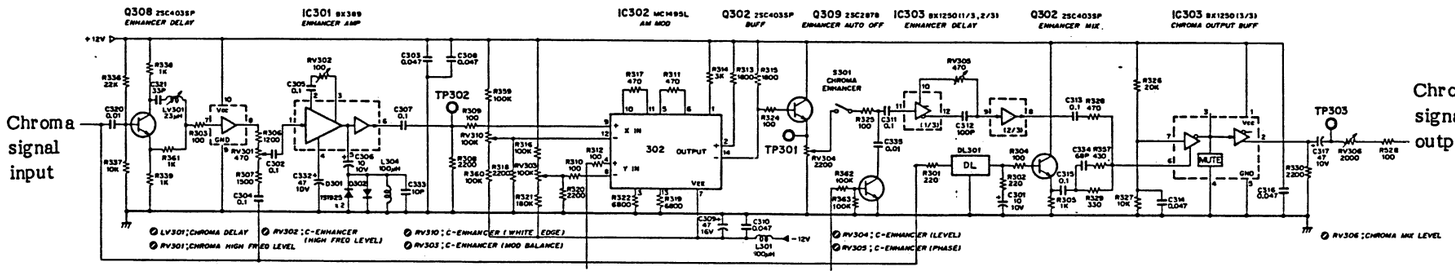

Circuit diagram 6

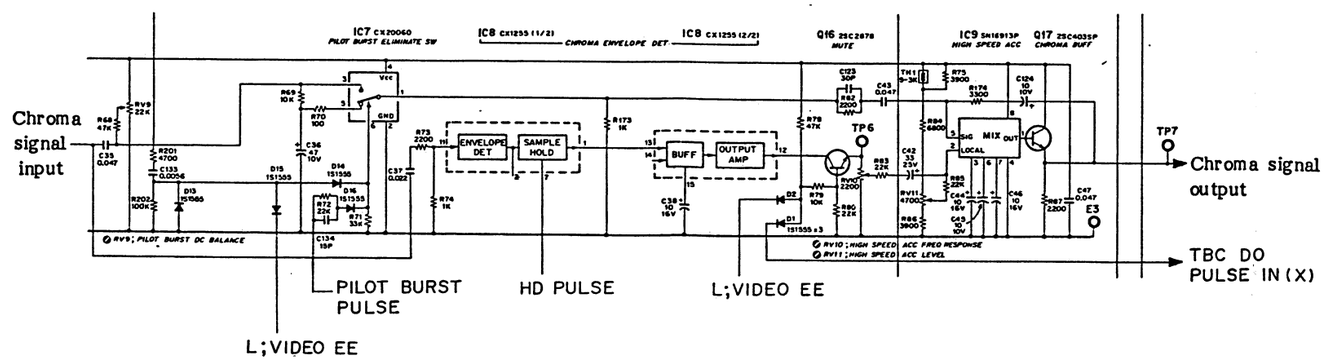

Circuit diagram 5

The output signal of sync slicer Q7 or the high-frequency component of the Y signal is fed to buffer amplifier Q303.

The Y signal phase is equal to that of the chroma signal high-frequency component, and the modulated signal is amplified 6dB by Q304. _____ is then eliminated by low-pass filter FL301, amplified by Q305, then differentiated by IC305. Differentiation is carried out by the high-pass filter consisting of R346 and L302. IC305 acts as a limiter to suppress excessive RF voltages. The limiter output can appear at TP304. The signal at pin 7 of IC306 is rectified with a full-wave rectifier. RV308 connected to pin 8 of TP305 is used to adjust the signal level at TP305. RV309 is used to adjust the slicing level on the full-wave rectifier output. The resultant signal is then differentiated by IC307 together with a high-pass filter consisting of R350 and L303. The differentiated signal can appear at TP306.

The signal voltage at TP306 has a bandwidth wider than the chroma signal bandwidth (±500kHz). Transistors Q306 and Q307 together with C329 and C331 are used to limit the frequency bandwidth.

This signal can be observed at TP307 with an oscilloscope.

(See circuit diagram 7.)

The high-frequency component of the Y signal, which is generated by the above method, is fed to pin 4 of IC302. The high-frequency component of the chroma signal is amplitude modulated. The modulated chroma enhancement signal is fed to pin 11 of IC303 through buffer amplifier Q302 (TP301), RV304, and S301. RV304 is used to adjust the chroma enhancement signal level. S301 is used to control the chroma enhancement circuit. Q309 mutes the output of the chroma enhancement circuit in the conventional mode. IC303 contains a phase shifter used to set the enhancement signal phase equal to that of the main chroma signal. RV305 is used to adjust the enhancement signal phase so the enhancement signal phase is equal to that of the main chroma signal. The output of the chroma enhancement circuit can appear at TP308.

The main chroma signal and enhancement signal are mixed by IC303. The mixed signal can appear at TP303. RV306 is used to adjust the chroma signal level. The ratio of the chroma signal level to the Y signal level is controlled by the adjuster at the video output terminal.

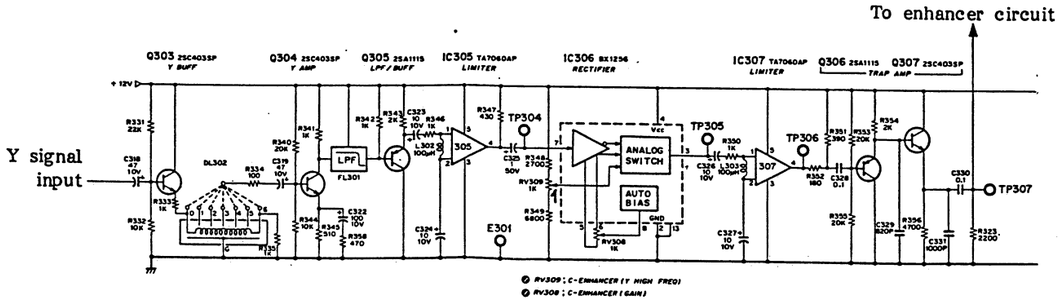

Circuit diagram 7

The automatic phase control (APC) loop will be described next. The loop configuration is the same as that of the current machine. The chroma signal (at 4.43MHz) is fed to pin 13 of IC4, then fed to the burst gate circuit. The burst gate pulse is fed to pin 16 of IC4. The burst signal is fed from the burst gate circuit to the APC detector circuit. The burst signal is then compared with the reference signal (at 4.43MHz) fed to pin 15 of IC4. The error voltage appears at pin 14 of IC4 and can also appear at TP9. This voltage is then fed to pin 14 of IC11 to drive the voltage-controlled oscillator at 8 x 924kHz. The central frequency of the VCO at 8 x 924kHz is determined by the DC voltage at pin 19 of IC4. RV20 is used to adjust the central frequency of the VCO.

This signal is fed to the f/8 count-down circuit within IC where the 924kHz signal can be obtained. The 924kHz signal is mixed with the internal reference oscillator output (at 4.43MHz), then converted to the 5.35MHz (4.43MHz + 924kHz) signal. The frequency converter output appearing at pin 5 of IC is fed to bandpass filter FL3 to eliminate the harmonics. The bandpass filter output appears at TP15 passing through RV21. RV21 is used to adjust the 5.35MHz signal level. The 5.35MHz signal is fed to pin 1 of IC4 to convert the frequency from 924kHz to 4.43MHz. The DC voltage used to determine the center frequency of oscillation of the VCO appears at pin 19 of IC4. The DC voltage is determined by IC16 as shown in the illustration when the system is operating in the TBC mode. The DC voltage is controlled by RV22 during FWD running, and by RV23 during REV running. The use of either RV22 or RV23 is controlled by IC16.

(See circuit diagram 8.)

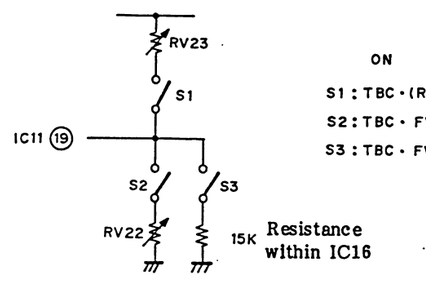

ON

S1 : TBC · (REV)

S2 : TBC · FWD

S3 : TBC · FWD capstan speed < 1.2

The illustration on the left shows the IC16 operation.

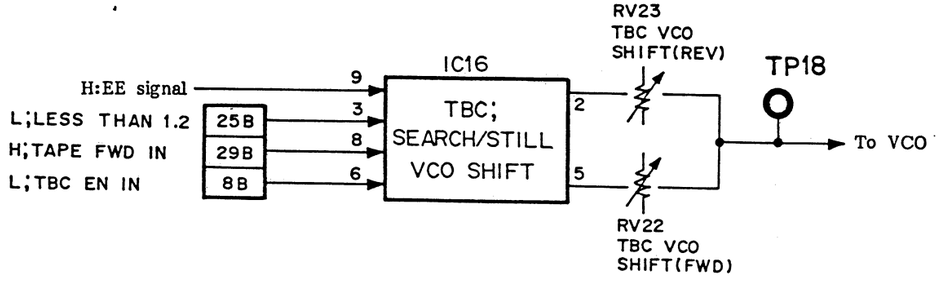

Circuit diagram 8

The L:LESS THAN 1.2 (25B) signal appears at pin 3 of IC16, the H:SERVO LOCK signal appears at pin 9 of IC16, the H:TAPE FWD IN signal at pin 8 of IC16, and the L:TBC IN signal can appear at pin 6 of IC16. The BVU-800 and BVU-850 systems both provides the APC ID circuit used to prevent the system from pseudo locking as4well as the APC loop.

The APC ID circuit principle of operation will be described next.

APC ID operation principle

* Establishing pseudo locking in the PAL (CX-859)

Assume that the VCO operating at 473fH (= 8 x 924kHz) becomes 481fH for any reason when the power is turned on.

The continuous wave at 924kHz then becomes 924kHz + fH.

The 5.36MHz carrier becomes 5.36MHz + fH.

The 4.43MHz chroma signal becomes 4.43MHz + fH.

In the APC detection, the signal is sampled at intervals of fH during the burst period. If the chroma signal frequency is shifted by fH, the APC error cannot be sent and the loop is established by locking while the frequency remains 4.43MHz + fH. This locking mode is called pseudo locking.

The oscillation frequency in the VCO is counted with IC1 to detect pseudo locking. Counting is carried out in the following manner.

$$\begin{aligned} \text{VCO OUT} &\fallingdotseq 8 \times 924\text{KHz} \\ &= 8 \times (59 + \tfrac{1}{8})\, f_H \\ &= 8 \times \tfrac{473}{8}\, f_H \\ &= 473\, f_H \end{aligned}$$

The VCO output is counted for 4H period.

473 x 4H = 1892

The remainder in the 1/256 counter contents is calculated as 1892 - (256 x 7) = 100.

The upper limit is 105 and the lower limit is 95. The above remainder is compared with the upper and lower limits. If the above value exceeds the specified range, ID is output. That is, ID is output if the above value exceeds the range 924kHz ± 2.4kHz.

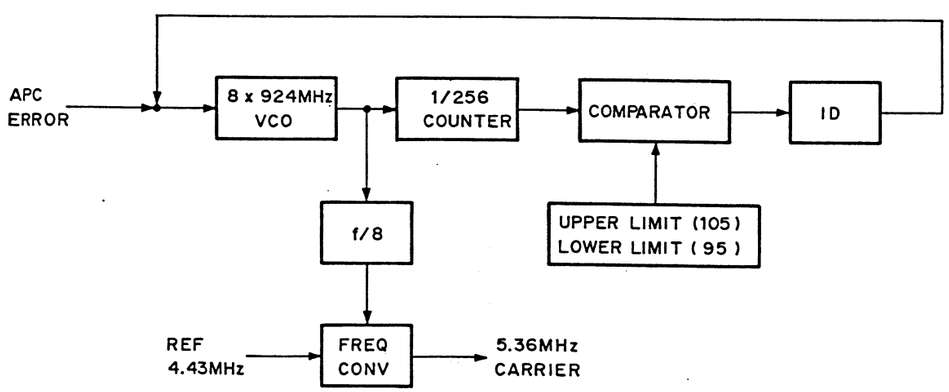

Frequency of VCO output

The Y signal is fed from 16A to pin 22 of IC11 to separate the sync signal component from the composite video signal. The sync signal is fed from pin 24 of IC11. The sync signal can appear at TP13 and TP14, and these signals are used as the pilot burst gate pulse output signals. The sync signal is fed to the H/2-killer circuit within IC11 to eliminate the axiliary pulse, then fed to the f/8 counter circuit. The f/8 counter is clocked at 924kHz multiplied by 8. The counter output is compared with data read out of the PROM by using a comparator within IC11. The comparator output is fed to the APC ID circuit to prevent the APC loop from pseudo locking at the VCO frequency. The ID signal is stopped by the guard-band pulse at 18A or pin 17 of IC11 during guard-band operations. Thus, the time to establish a locking loop is shortened.

The output of the H/2 killer circuit, which can appear at pin 26 of IC11, is fed to pin 6 of IC12 passing through TP11. This signal is used in the ACC and APC circuits, and also to generate the pilot burst elimination pulse. RV15 is connected to pin 18 and is used to adjust the pilot burst gate pulse width. The pilot burst gate pulse is output at pin 11 of IC11. This signal is muted by the L:COLOR signal at pin 17 of IC11. RV16 is connected to pin 9 of IC11 and is used to adjust the phase of the ACC burst flag pulse. RV17 is used to adjust the width of the ACC burst flag pulse. The ACC burst flag pulse is output at pin 4 of IC11. The burst gate pulse level is adjusted by using RV19 to adjust the ACC loop gain. RV13 is connected to pin 7 of IC11 and is used to adjust the phase of the APC burst gate pulse. RV14 is connected to pin 15 of IC11 and is used to adjust the width of the APC burst gate pulse. RV18 is connected to pin 12 of IC11 and is used to adjust the APC burst gate pulse level and the APC loop gain. This pulse is fed to pin 16 of IC4. The high-speed ACC sample pulse is generated by the burst gate pulse at pin 7 of IC8.

This sample pulse is muted by Q25 during TC. (See circuit diagram 9.)

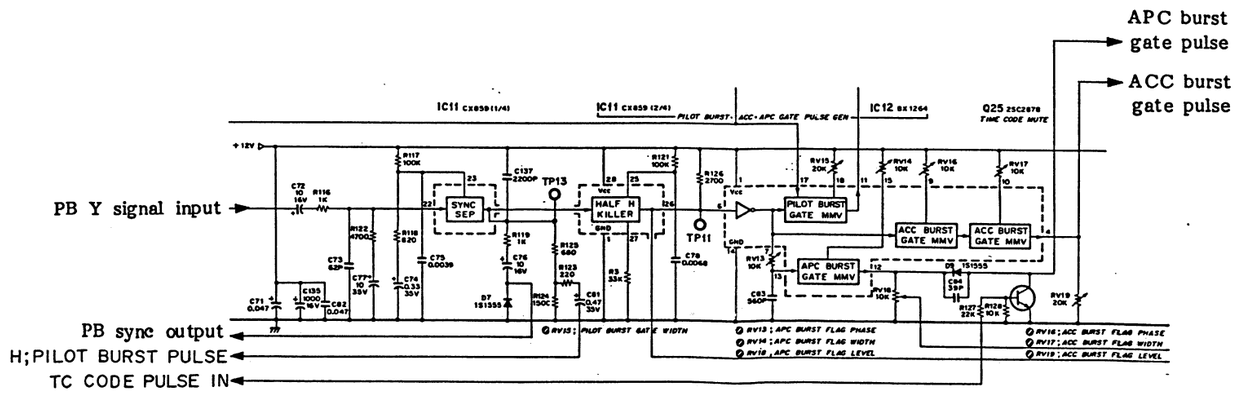

Circuit diagram 9

<ACC loop>

The ACC loop is controlled by the ACC burst flag pulse at pin 17 of IC4 to send the burst signal. Then, the burst signal is compared with the 4.43MHz reference signal oscillator output. The error voltage obtained from the comparator is fed to the DC amplifier. The threshold voltage to establish an ACC is determined by C65, R105, and RV12 which are connected to pin 18 of IC4. The ACC amplifier gain can be controlled by the output of the DC amplifier. The output of the DC amplifier is fed to pin 2 of IC4 with respect to pin 24 of IC4. Thus, the ACC loop is established. The field memory circuits are used to correct the chroma sensitivity of the PB head. One of these circuit is composed of C67 and 68 connected to pin 9 of IC4, and the other is composed of C69 and C70 connected to pin 10 of IC4. The outputs of these field memory circuits are output to pin 8 of IC4. The RF switching pulse selects one of these field memory circuits within IC4. The ACC error voltage is compared with the reference voltage by the ACK circuit. If the error voltage is greater than the reference voltage, the color killer is activated to select the color signal instead of the monochrome signal. The time constant control circuit consists of Q22 and Q23. The time constant is increased to suppress perturbation in the ACC loop during operation in the EE-12V mode or during vertical blanking. IC17 is used to generate the vertical blanking pulse for this purpose. RV24 adjusts the vertical blanking pulse width. The generated vertical blanking pulse can appear at TP21. This signal is muted by Q21 during EE mode operation. The head is thus not used in the EE mode.

The time constant for establishing an ACC loop depends on the operation mode (i.e., the EE mode). The time constant can be set by the servo lock signal.

When no servo lock signal is sent, R102 is connected to the timing circuit consisting of Q19 and Q20 to increase the time constant. This operation is controlled by the L:SERVO LOCK IN (31A) signal. Thus, perturbation in the ACC loop is suppressed. In the EE mode, R102 is connected to the timing circuit by Q18 to suppress perturbation in the ACC loop.

(See circuit diagram 10.)

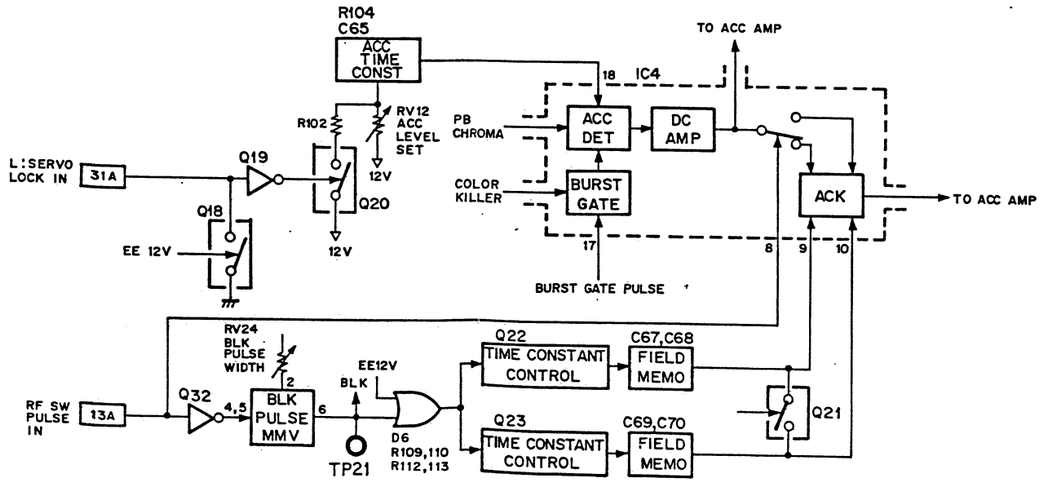

Circuit diagram 10

The EXT SC signal or TBC return subcarrier is fed from 5B to pin 11 of IC13. This signal is fed to the detector circuit through the limiting amplifier. If the external subcarrier is fed to pin 12 of IC13, the switching IC control signal (which is low in the active state) can appear at pin 6 of IC10. The external subcarrier, appearing at pin 6 or IC13 and at TP14, is fed to pin 3 of IC10. The crystal oscillator consisting of T1 and X1 sends an output at pin 19 of IC4 in the reference oscillator circuit if the crystal oscillator is used. The crystal oscillator output is fed to pin 5 of IC10. The oscillator contains a positive feedback loop from pin 1 of IC10 to pin 21 of IC4. When the external subcarrier is fed to the system, the signal voltage at pin 6 of IC10 goes low and the output signal is fed from pin 3 of IC10 to pin of IC10. The 4.43MHz signal is thus sent to 9B.

(See circuit diagram 11.)

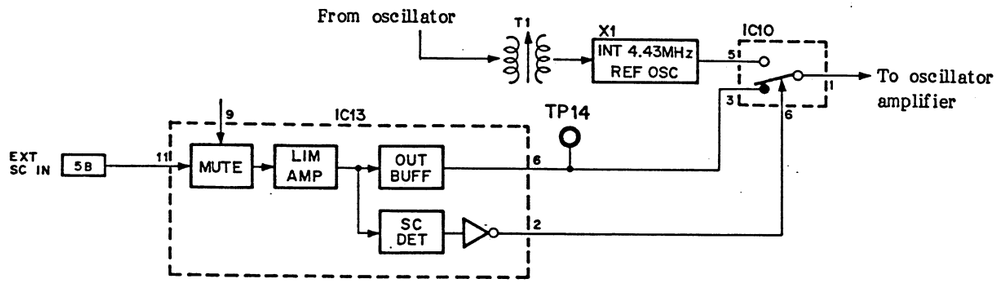

Circuit diagram 11

The demodulated Y signal is fed from the YD board to the phase equalizer consisting of Q501 and Q502. RV506 adjusts the demodulated Y signal level. RV507 adjusts the PB Y signal level. The Y signal is fed from NP-8 to the high-frequency response compensation circuit. The Y signal is fed from pin 2 of CN1 to pin 6 of CN1.

The Y signal is also fed to pin 2 of IC506, then fed to the video output amplifier through the buffer amplifier. This Y signal is fed to the Farrajo type noise canceller circuit. The Y signal is fed to IC504 for amplification, then fed to IC505 and Q508. IC505 constitutes a limiter amplifier and is connected to the high-pass filter consisting of R544 and L503. The Y signal is fed from inverter Q508 through buffer Q507 to limiter amplifier IC503. RV504 is used to mix the Y signal with the compensation circuit output to eliminate noise.

The Y signal is also fed through Y signal amplifier Q509 to the edge correction circuit consisting of Q510 and Q511 to reproduce the edge signal component which was lost in the noise canceller circuit. RV509 sets the edge signal phase with the Y signal phase. RV508 adjusts the edge signal level to be mixed with the Y signal.

The Y signal fed from IC506, chroma signal appearing at TP303, noise canceller output fed from IC504, and edge signal appearing at TP508 are mixed, and the mixed signal is fed to video amplifier IC506.

The VD signal fed from pin 7 of IC506 is added to the mixed Y signal in IC506 to prevent the Y signal from lack of the VD in the search operation mode. The Y signal is fed through the video amplifier to pin 8 of IC506, then fed to IC507 and IC508. IC507 and IC508 each have two routes. IC507 and IC508 are operated at supply voltages of ±12V DC. Thus, no sag can occur in IC507 and IC508.

(See circuit diagram 12.)

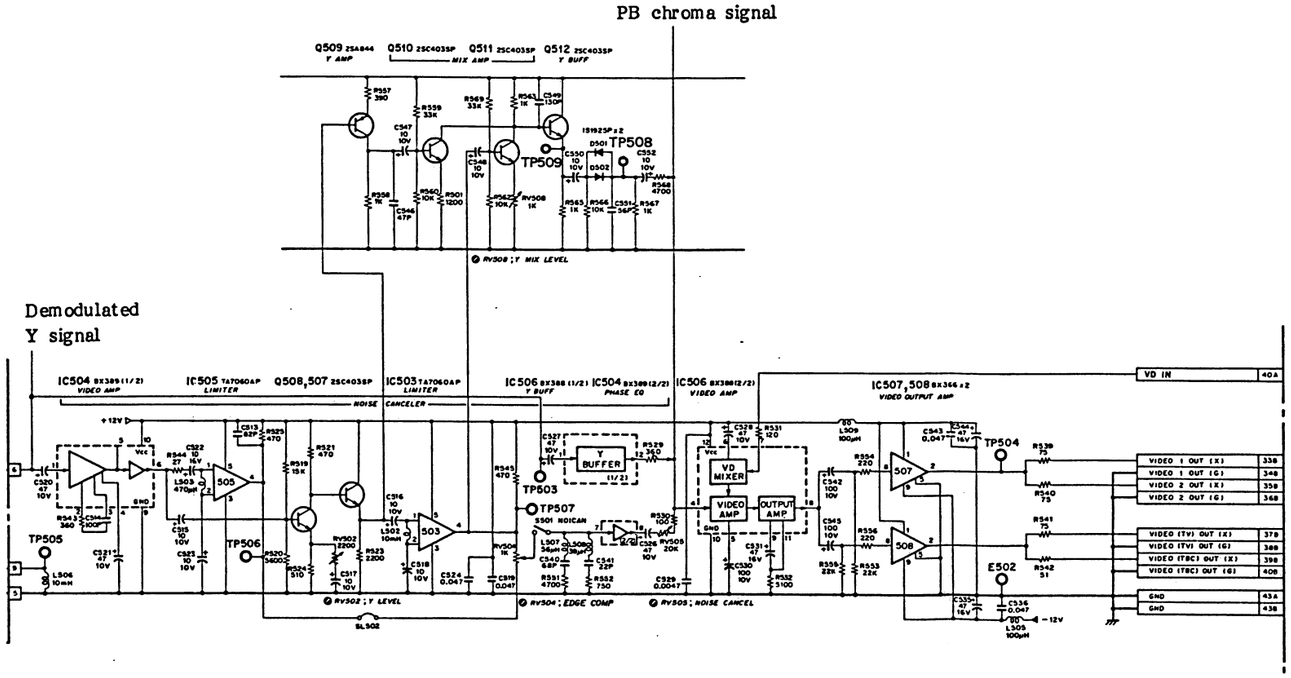

Circuit diagram 12

SECTION 3

AUDIO CIRCUIT

SECTION 3
AUDIO CIRCUIT

Features:

- C-type Dolby noise reduction system
  This unit is the first U-matic VTR to employ a C-type Dolby Noise Reduction system. This greatly improves the S/N ratio of the U-matic VTR by approximately 20dB more than conventional VTRs during Dolby ON operations. Moreover, a high-level, low-impedance buffer amplifier is provided in the signal transmission system on each board. This also greatly contributes to the improvement of the S/N ratio.

- Independent audio erase circuit in each channel
  Audio erase circuits are independently provided for audio CH-1 and CH-2. As a result, split editing of an audio signal can be easily performed.

- Relayless circuit
  With conventional VTRs, a relay circuit is used for selecting the head or erase signal. For the BVU-850P, no relay circuits are used to obtain high reliability.

1. C-TYPE DOLBY NOISE REDUCTION SYSTEM

A C-type Dolby noise reduction system, used for the audio circuit of the U-matic SP, will be described here. The system provided with BX-1152 (IC) is used for the BVU-850P, BVU-150P and Betacam series, and two BX-1152s are employed in one channel.

However, one variable coil is provided only for the external terminal of BX-1152. External control can be performed using only MODE CONTROL (REC/PB and Dolby ON/OFF) switches. This makes the BX-1152 as a black box. Therefore, the Dolby reduction system principles will be simply described and its block diagram shown.

1-1. Dolby Encoding System

As shown in the illustration below, the C-type Dolby noise reduction system has encode characteristics. The system performs encoding in the REC mode and decoding in the PB mode because of its reverse characteristics. This reduces tape hiss noises, that is, audible noises of 3 to 8kHz.

The illustration above shows the block diagram of Dolby IC in the REC mode. The REC IN signal fed to Dolby IC is sent through a line amplifier to spectral skewing.

This spectral skewing, a serial resonance circuit with a resonance frequency of 20kHz, suppresses a 10kHz or more high-frequency component in order to prevent this component, recorded on tape, from being saturated. The resonance frequency is adjusted using LV101 and LV102.

B TYPE ENCODE CHARACTARISTICS

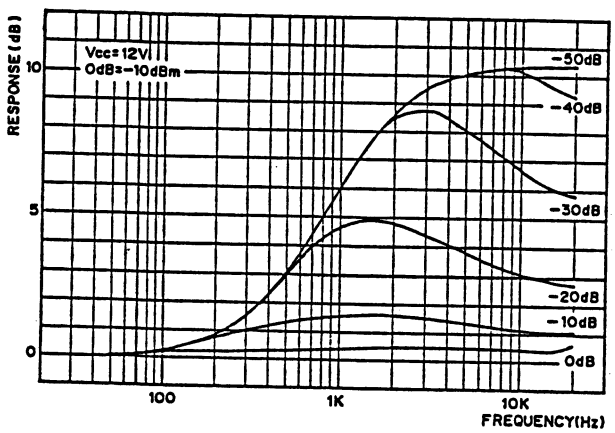

C TYPE ENCODE CHARACTARISTICS

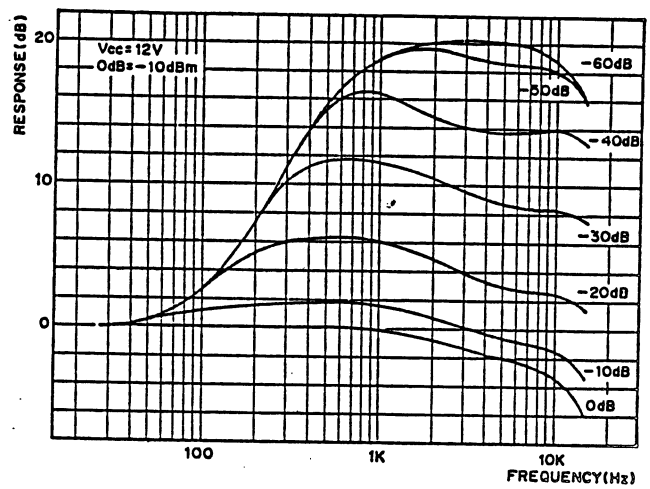

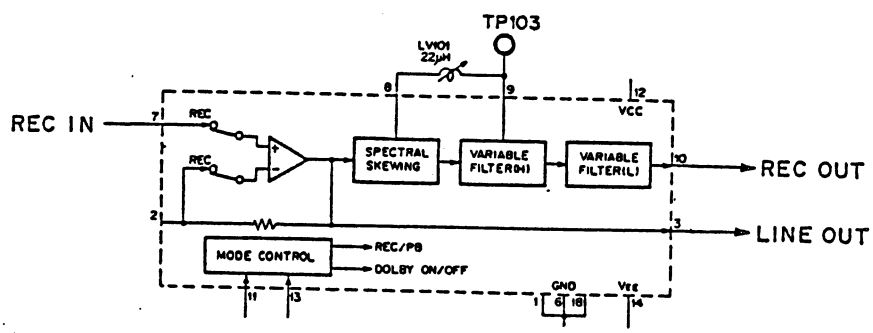

Output from spectral skewing is fed to the high-level stage. This high-level stage consists of both main signal and sub-signal paths.

The sub-signal path provided with a variable high-pass filter constitutes a high-pass filter. The cutoff frequency is changed when passed through this high-pass filter. This is called the sliding band system. According to this system, the cutoff frequency of the high-pass filter is shifted to a higher level so that the high-level signal is not encoded to encode only low-level signals.

At this point, the main and sub-signals are added and fed to the next low-level stage. This low-level stage performs the same function as the high-level stage except that its main signal path contains an anti-saturation circuit. This circuit is used to lower the high-frequency gain in the main signal path and to lower the high-band saturation level. The C-type Dolby system enables noises to be suppressed by 10dB (20dB in all) in the high-level and low-level stages, respectively.

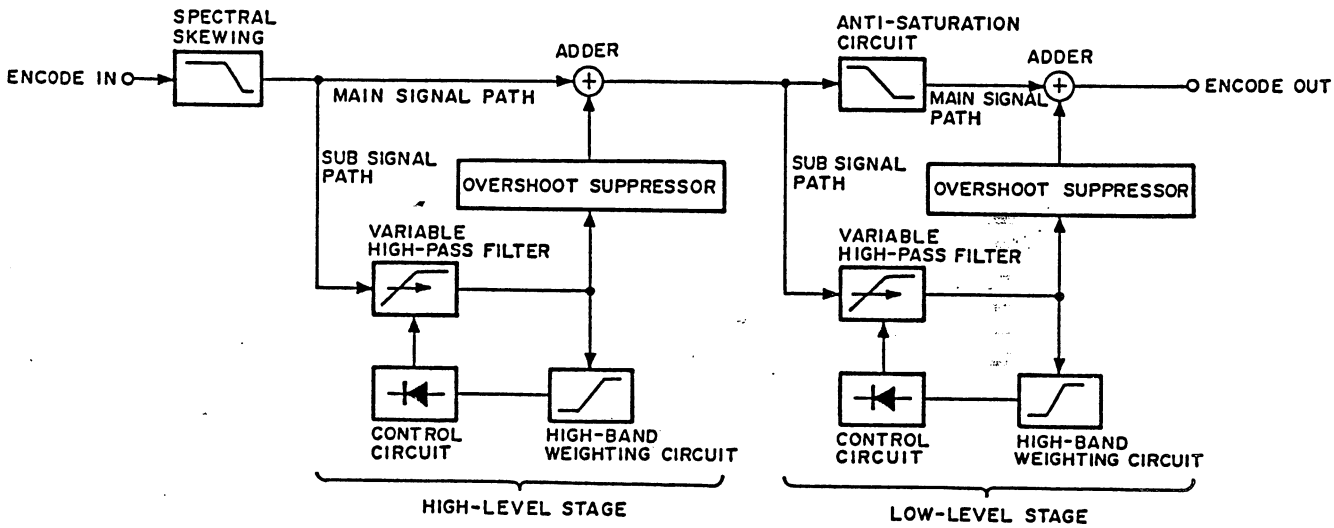

Block diagram of encoder (recorder) circuit in C-type Dolby system

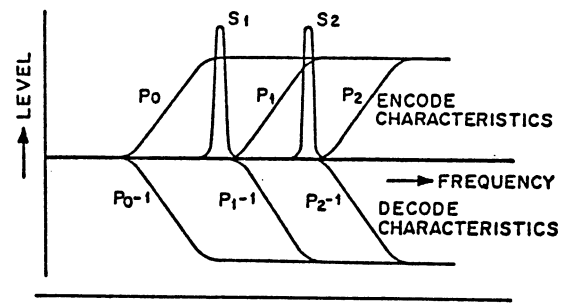

Noise suppression based on Dolby system (sliding band system)

1-2. Decoding System

The encoded signal is decoded using a decoder circuit in the PB mode. The decoder is opposite both in configuration and function to the encoder.

Spectral skewing, variable filter (H) and variable filter (L) are provided in the negative feedback loop of the first-stage line amplifier as shown in the block diagram. The situation shown in the above diagram allows the encoder to operate as a decoder.

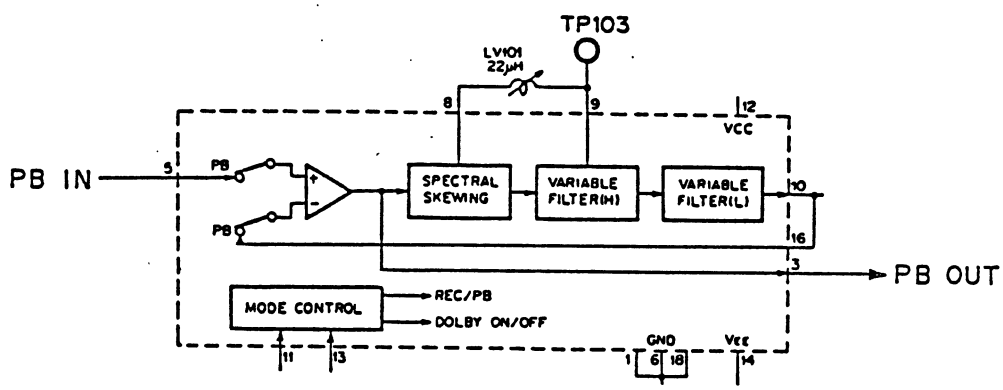

C TYPE DOLBY NR SYSTEM IN THE PB MODE

DOLBY AUTOMATIC DETECTION

Automatic Detection Method
(REC Circuit)

1. The REC CTL (1/2VD) signal frequency is divided to half using a counter and converted into a sine wave (pilot signal) by passing through a low-pass filter.
2. The pilot signal frequency is 12.5Hz for PAL and 15Hz for NTSC.
3. The pilot signal passing through an attenuator is mixed with CH-1 and CH-2 and recorded in each channel.

Dolby automatic detection recording circuit

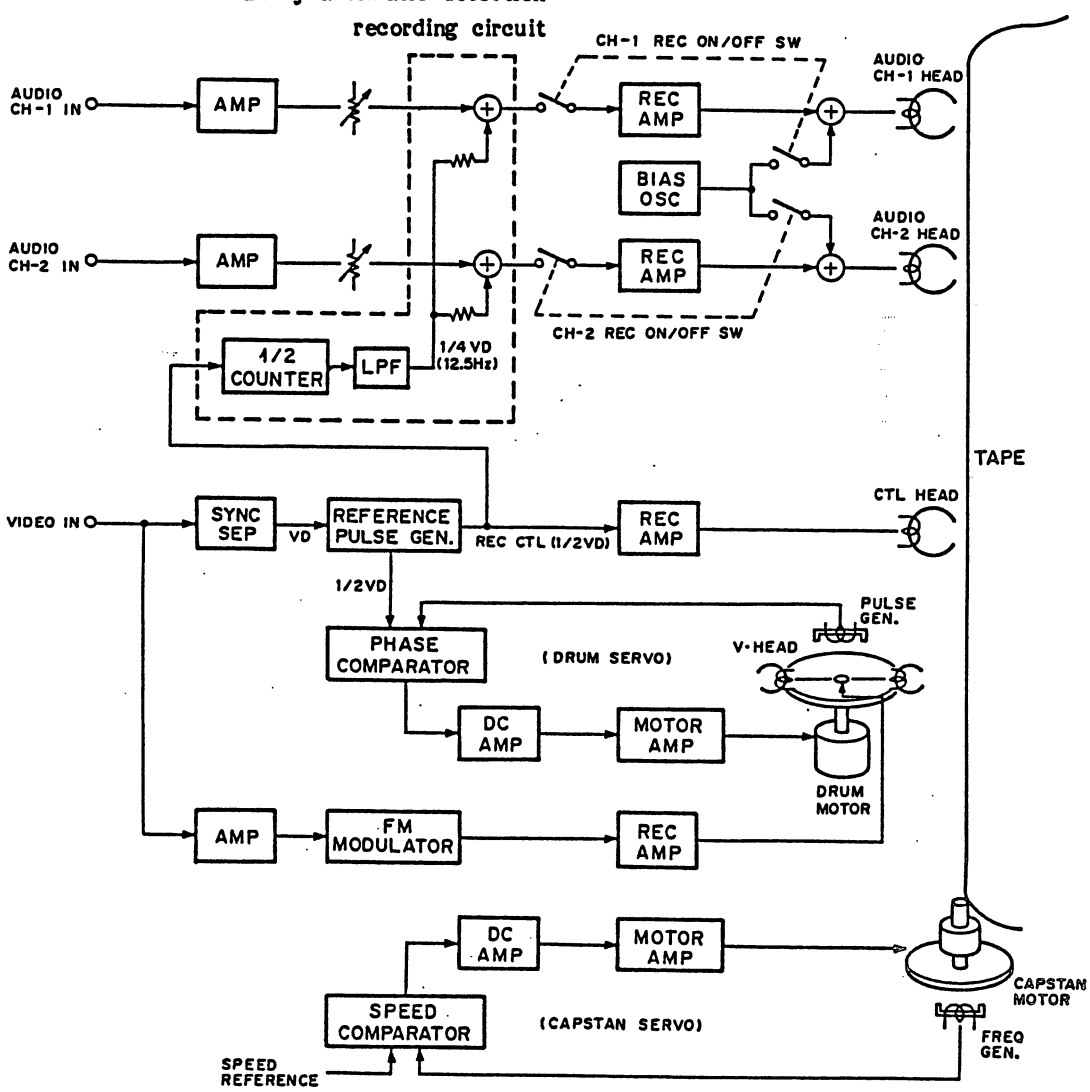

Added for Dolby automatic detection
(Others circuits are conventionally configurated.)

(PB Circuit)

1. The playback CTL signal is converted into a 1/4 VD signal (12.5Hz) using the 1/2 counter and fed to the phase detector.

2. The signal played back by the audio head branches into two routes. One is fed to LINE OUT terminal through the circuit in which a pilot signal is eliminated by using a high-pass filter.
   The other is fed to the phase detection circuit through the circuit in which only the pilot signal is passed by using a low-pass filter.

3. The pilot signal (12.5Hz) and 1/2 CTL signal (12.5Hz) are compared in phase using a phase detector. (These two signals have the same phase.)

4. Phase detector output is passed through an amplifier and level detector (switching circuit). As a result, a DOLBY DET signal is obtained.

This automatic detection is characterized as follows:

1. A high S/N ratio is possible due to the phase detection circuit that can distinguish the pilot signal from an audio signal.

2. The pilot signal is a single tone.

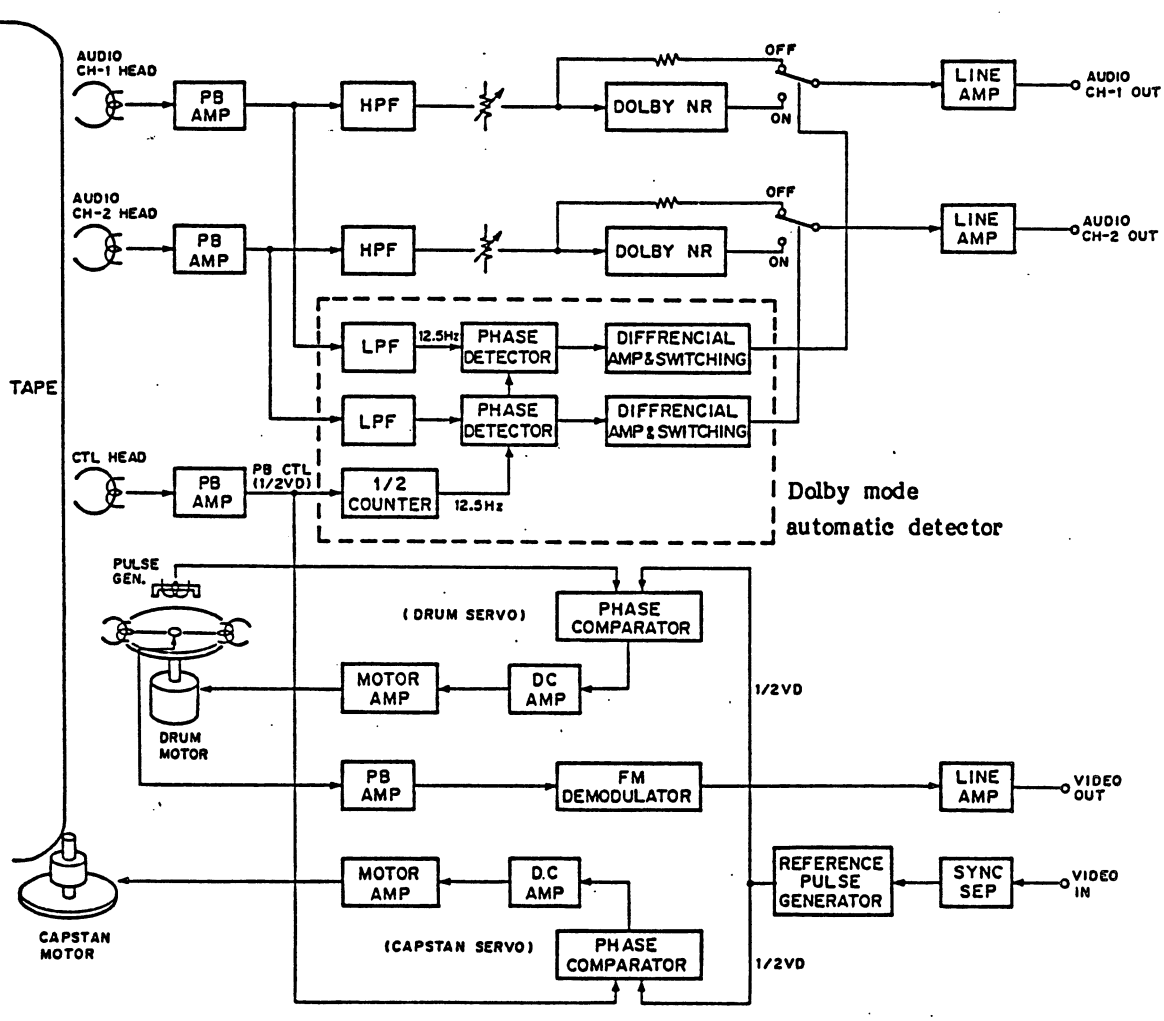

2. LEVEL DIAGRAM

The overall level diagram of an audio circuit is shown below.

Since the audio circuits in channels 1 and 2 are identically configured, only channel 1's circuit will be described here.

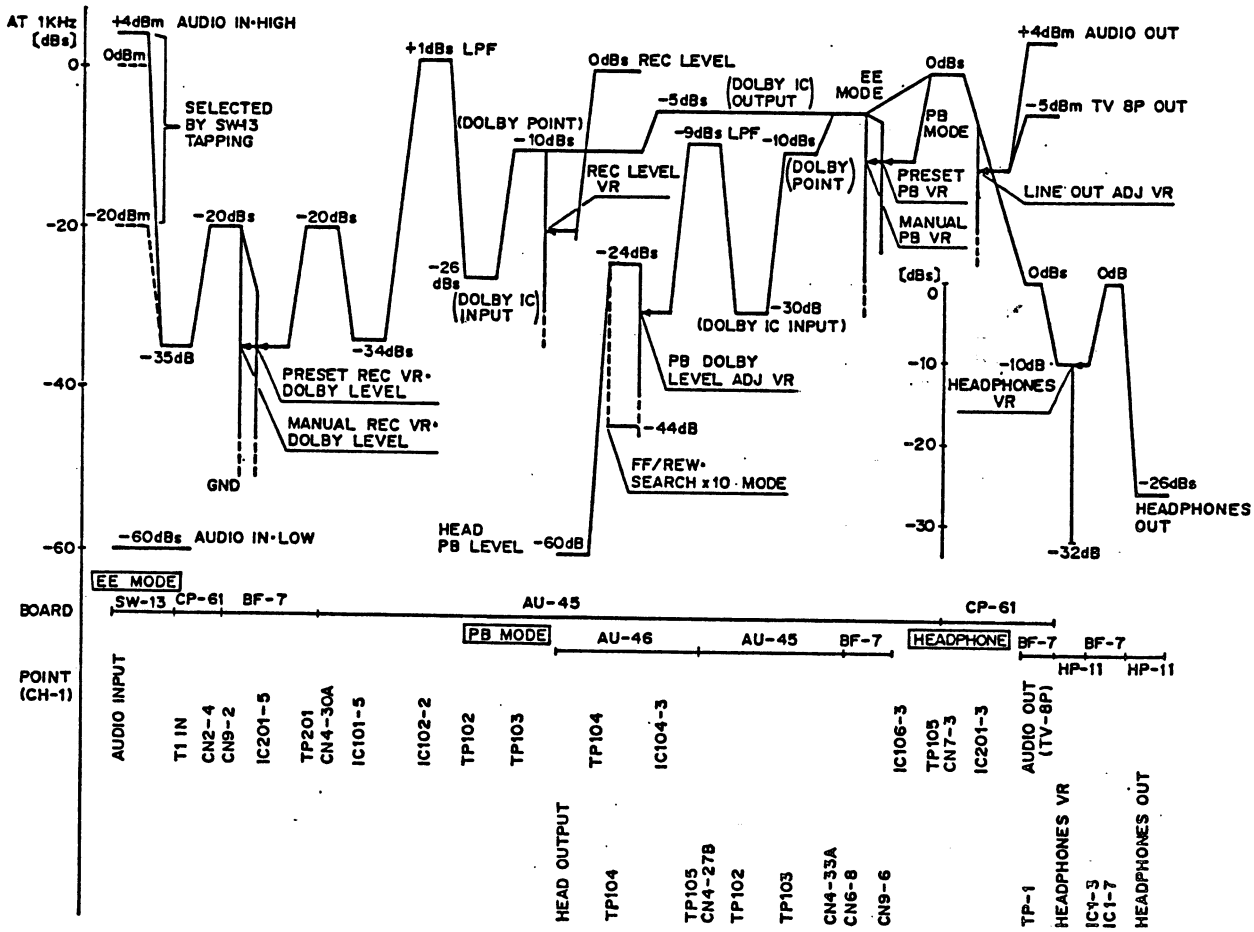

AUDIO LEVEL DIAGRAM

3. REC/EE SYSTEM

The block diagram of an REC/EE system is shown below.

3-1. CP-93 Board

The audio signal fed to the AUDIO IN connector on the connector panel is sent to the CP-93 board.

This CP-93 board consists of an audio signal input level selection circuit and a 600-ohm terminating switch. The input level select switch is changed over into the LOW or HIGH position in accordance with the input level. This select switch is changed over into LOW at -60dBm input (MIC INPUT) and HIGH at +4dBm input (LINE INPUT).

Input impedance is selected into 600 ohms or 10K ohms using a 600-ohm terminating switch. The 600-ohm terminating switch can be used to select the input impedance only when the level select switch is in the HIGH position. Further, when the level select switch is set to HIGH, the input level can be set to +4dBm, 0dBm or -20dBm in accordance with the CP-93 board's shorting-circuit pattern.

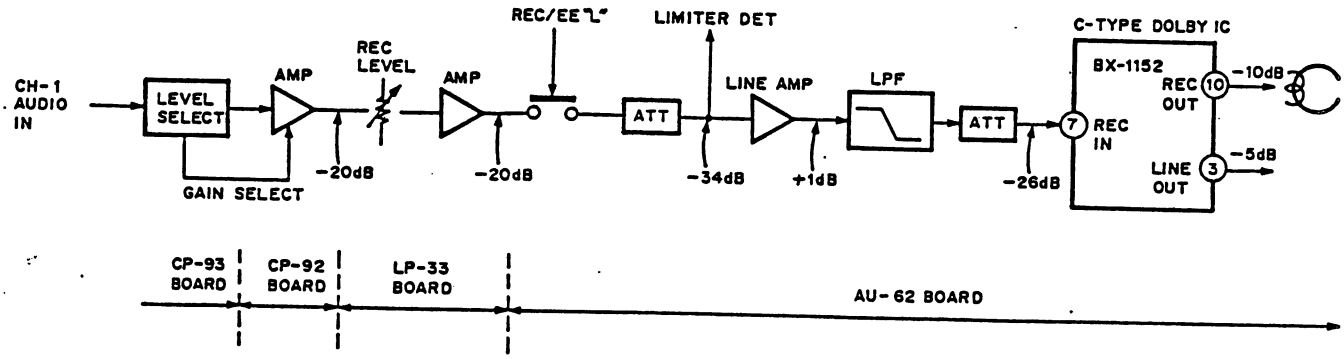

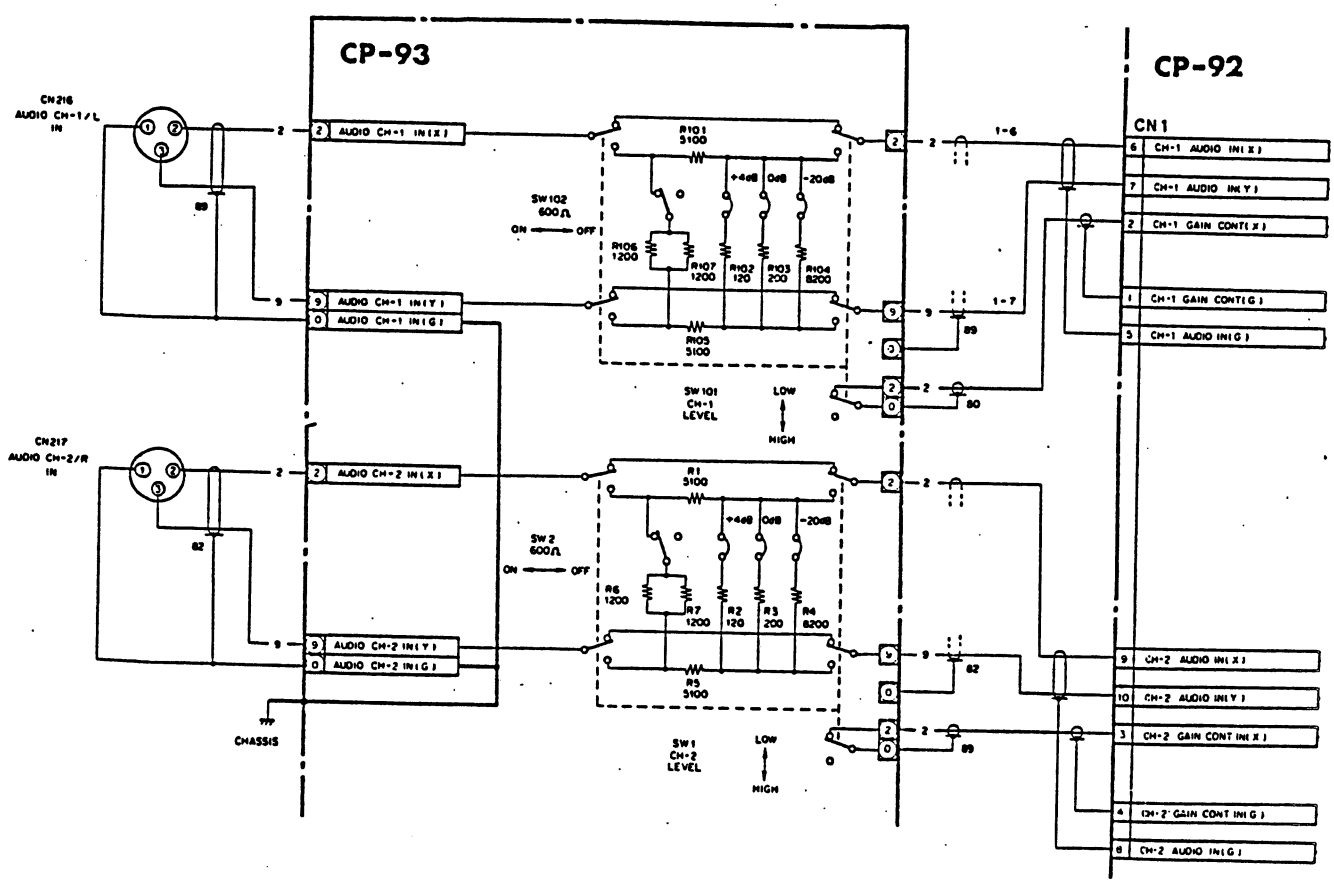

3-2. CP-92 Board

The audio output signal from the CP-93 board is fed to the CP-92 board. The resultant input audio signal is amplified on the CP-92 board.

With conventional VTRs, an input level signal of +4dBm is attenuated down to the same level (-60dBm) as the low-level input, and this attenuated signal is fed to the next-stage amplifier. However, this particular circuit configuration deteriorates the S/N ratio.

With the BVU-850P, an input level signal of +4dBm is attenuated down to -35dBm without any S/N ratio deterioration. At this point, the attenuated signal is amplified up to -20dB. This circuit configuration improves the S/N ratio during signal input and allows the Dolby system to be effectively executed.

The audio input signal to the CP-92 board is amplified using amplifier IC1 on the CP-92 board. The input level to amplifier IC1 changes depending on whether the input signal is high or low. Therefore, the amplifier gain is controlled using switch SW1 on the CP-93 board.

Amplifier IC1 has a gain of 40dB during MIC input and a gain of 15dB during LINE input. The resultant output signal, whether high or low, is -20dB.

3-3. LP-33 BOARD

The recording level of the input signal is adjusted on the LP-33 board and amplified to -20dB using amplifier IC1 on the LP-33 board. At this point, the amplified signal is fed to the AU-62 board in the next stage.

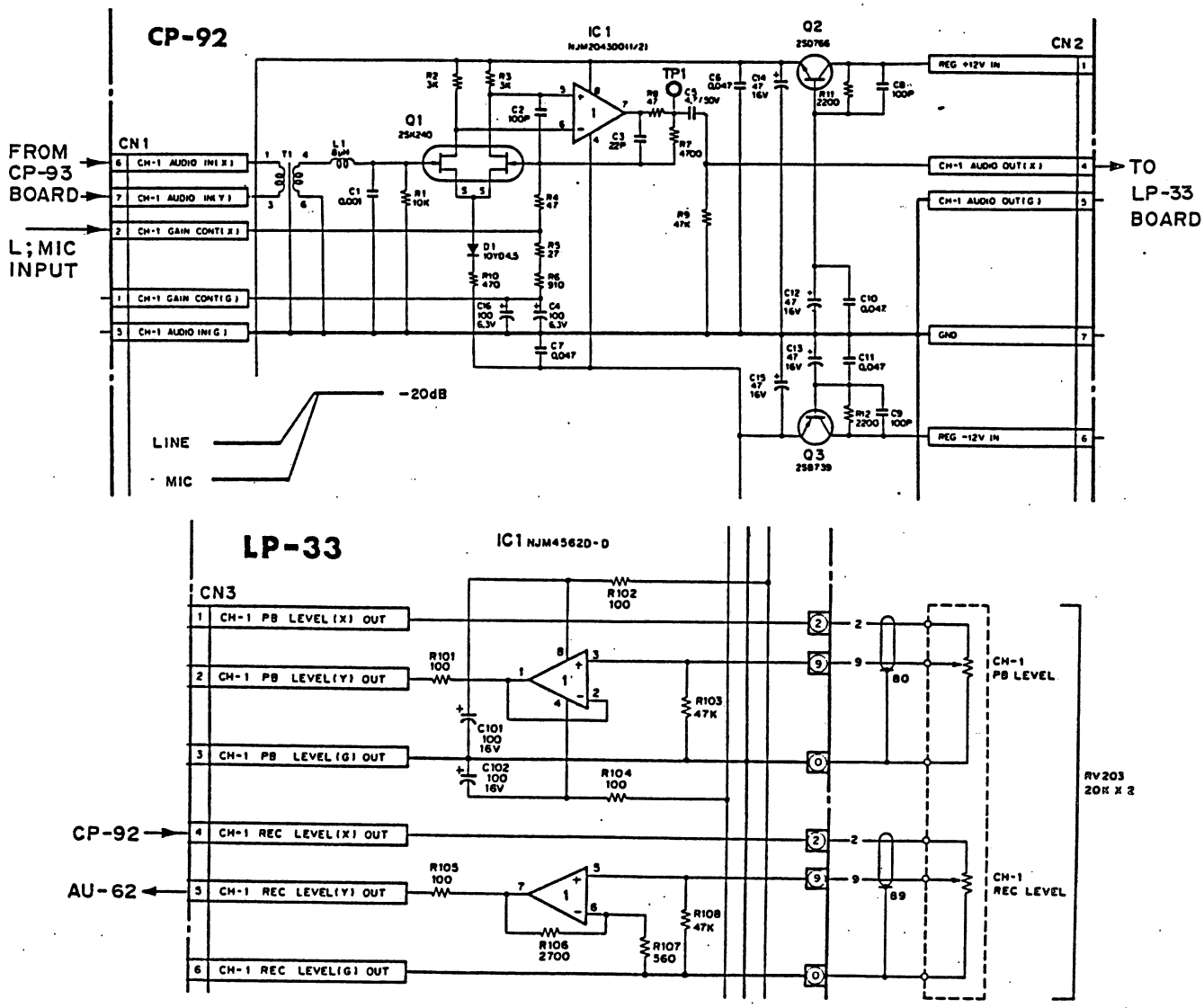

3-4. AU-62 BOARD

A recording signal is fed from the LP-33 board to connector 18A on the AU-62 board.

An input signal of -20dB is fed through REC/EE select switch Q119 to limiter/AGC circuits Q113 through Q116. AGC circuit Q116 functions to change the input impedance and gain of IC101 so that the line output signal at TP105 is 0dB. The AGC circuits are activated only in the REC mode. They are turned off in the PB mode when Q114 is turned on.

A signal attenuated down to -34dB using a limiter and attenuator is amplified up to +1dB using line amplifier IC101. Output from the line amplifier passes through low-pass filter IC102 with a cutoff frequency of approximately 17kHz. At this point, it is attenuated down to -26dB using the attenuator. This resultant -26dB signal level is used as a reference for recording input in Dolby IC IC104. When using a Dolby system in the audio circuit, recording and playback should be performed on the same level. If this level is not the same, a fluctuation in frequency characteristics is brought about due to an insufficiently executed Dolby effect.

For the BVU-850P, the Dolby level in both the REC and PB modes is set to -10dB at TP103.

A -5dB recording signal is fed from pin 10 of IC 104 and passes through a high-pass filter on the FL-31 board. A signal of approximately 12.5Hz is eliminated using this high-pass filter so as not to detect erroneously this signal as a pilot tone signal (described later). Next, the recording signal is amplified to 0dB and simultaneously equalized by REC amplifier IC105 (1/2). In this case, the SP and K tapes differ in high-frequency range response. Therefore, the REC amplifier equalizing response is changed over by turning on Q103 or Q120. At this point, the recording signal is inverted and amplified using IC105 (2/2) in the next stage, and the resultant signal is fed to the AU-63 board.

The line output signal in the EE mode is sent from pin 3 of Dolby IC IC104 and amplified to 0dB using line amplifier IC106.

A 0dB signal appearing at TP105 is branched into three routes: one is fed through buffer Q118 as headphone output, another is fed through Q117 to an audio meter in channel 1, and the third is fed to the AO-3 board, amplified up to +4dBm using output amplifier IC1 and output from the LINE OUT connector.

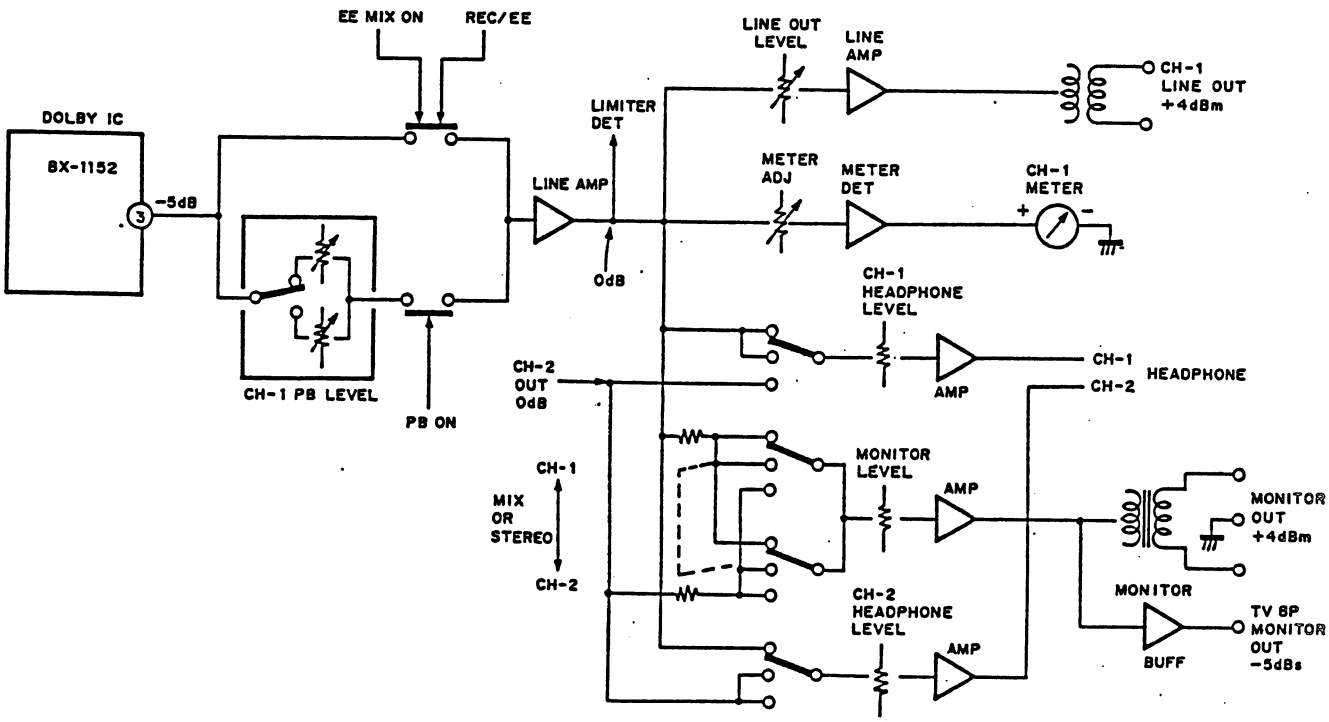

3-5. AU-63 BOARD

The recording signal fed to connector CN1-5 on the AU-63 board is sent to a bias trap circuit for channel 1 and a crosstalk canceler for channel 2. The signal which is bias-trapped using LV101 and C106 is mixed with a bias signal of 71kHz generated by Q402 through Q408. This mixed signal is fed to the audio head. At this time, the recording current flows through the audio head and is dropped to the ground through Q106 on the AU-63 board.

The recording current appearing at TP101 is sent to a crosstalk canceler which is used in the insert mode. When channel 1 is in the REC mode and channel 2 in the PB mode, the level of the channel-1 recording signal fed from TP101 is adjusted using RV201. Then, the recording signal is added through Q202 to a head amplifier in channel 2 so as to reduce the crosstalk contained in the channel-2 playback signal.

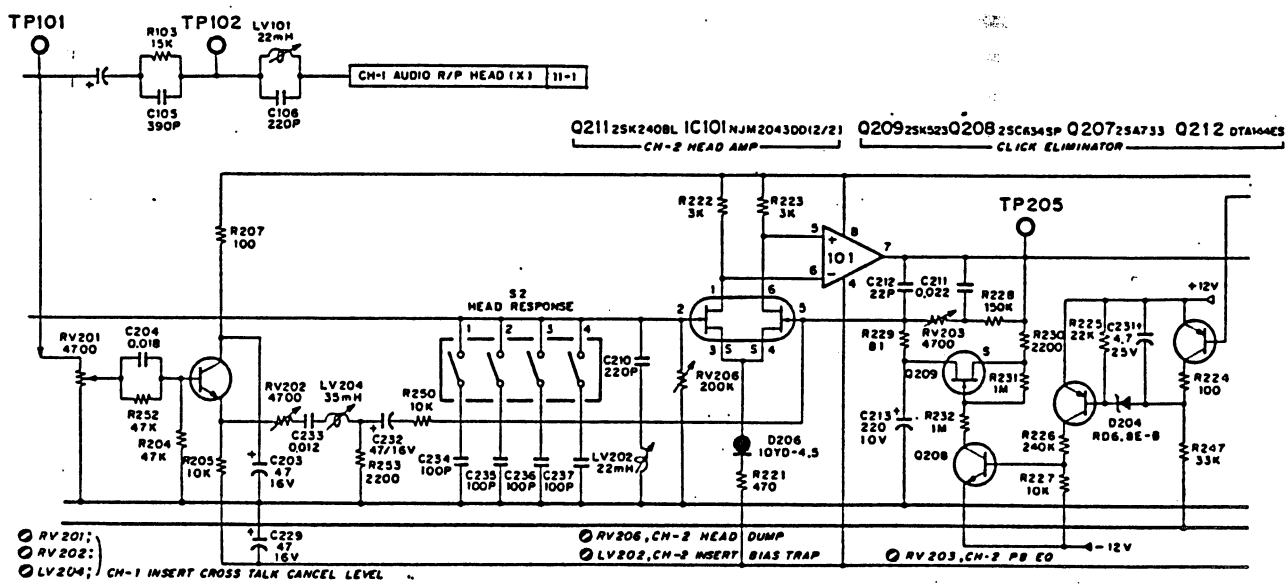

4. PLAYBACK SYSTEM

A -60dB audio signal which is played back by an audio head is fed from connector 4A on the AU-62 board to connector CN11-2 on the AU-63 board. The head peaking of the playback signal is adjusted using switch S1. Resonating the head and capacitor allows the head peaking frequency to be raised around 10kHz or more each time switch S1 is turned on in each position.

At this point, the playback signal is fed through a bias trap circuit consisting of C110 and LV102 to Q111 and head equalizer amplifier IC101. The resultant signal is amplified up to -24dB.

. Click eliminator circuit

Q111 and PB head amplifier IC101 have a DC gain exceeding 60dB. When the PB mode is changed to the REC mode or the REC mode to the PB mode, a noise of which the level is much higher than the signal level appears. Therefore, Q109 is turned on at this time, and the DC level of a head amplifier is not fluctuated. So, this noise disappears during output.

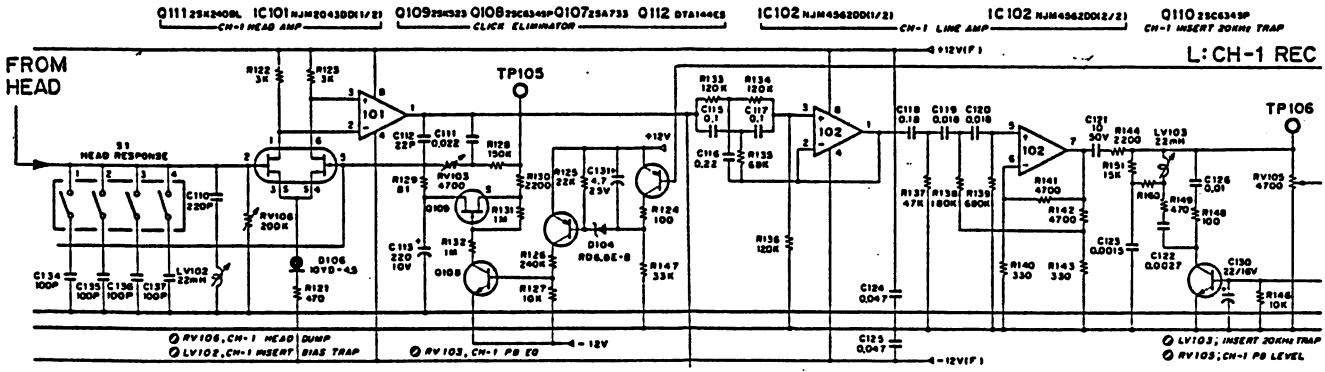

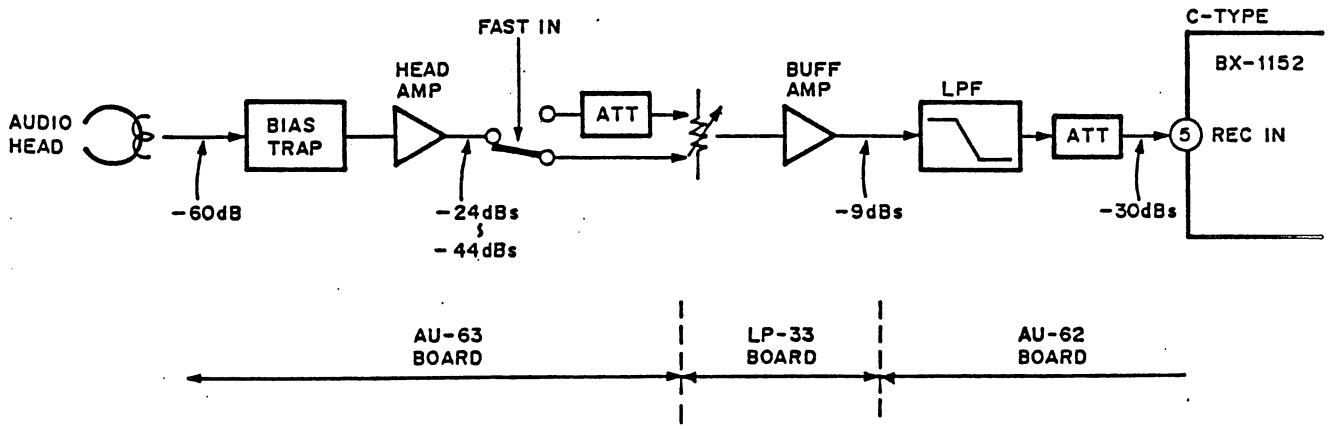

To eliminate the pilot tone signal of 12.5Hz contained in the playback signal, this playback signal is passed through high-pass filter IC102 in the next stage. At this time, the playback signal component which is less than 40Hz is eliminated and the pilot tone signal component of 12.5Hz is suppressed to less than -50dB.

Q110 is turned on during the insert mode in only one channel to suppress a high frequency signal of approximately 20kHz and to prevent crosstalk from occurring.

Next, the playback signal is fed to connector CN1-2 on the AU-62 board and attenuated through 17kHz low-pass filter IC103 down to -30dB by an attenuator consisting of R114 and R115. Then, the attenuated signal is sent to pin 5 of Dolby IC IC104.

The level of a -5dB signal fed from pin 3 of IC104 is adjusted using the front panel PB control volume on the LP-33 board, and then sent to analog switch Q109 on the AU-62 board again.

During power ON, Q111 and Q112 mute this circuit while C143 is charged.

Next, the signal is amplified using line amplifier IC106 and fed from the LINE OUT connector at 0 to +6dB, with +4dB as the reference level.

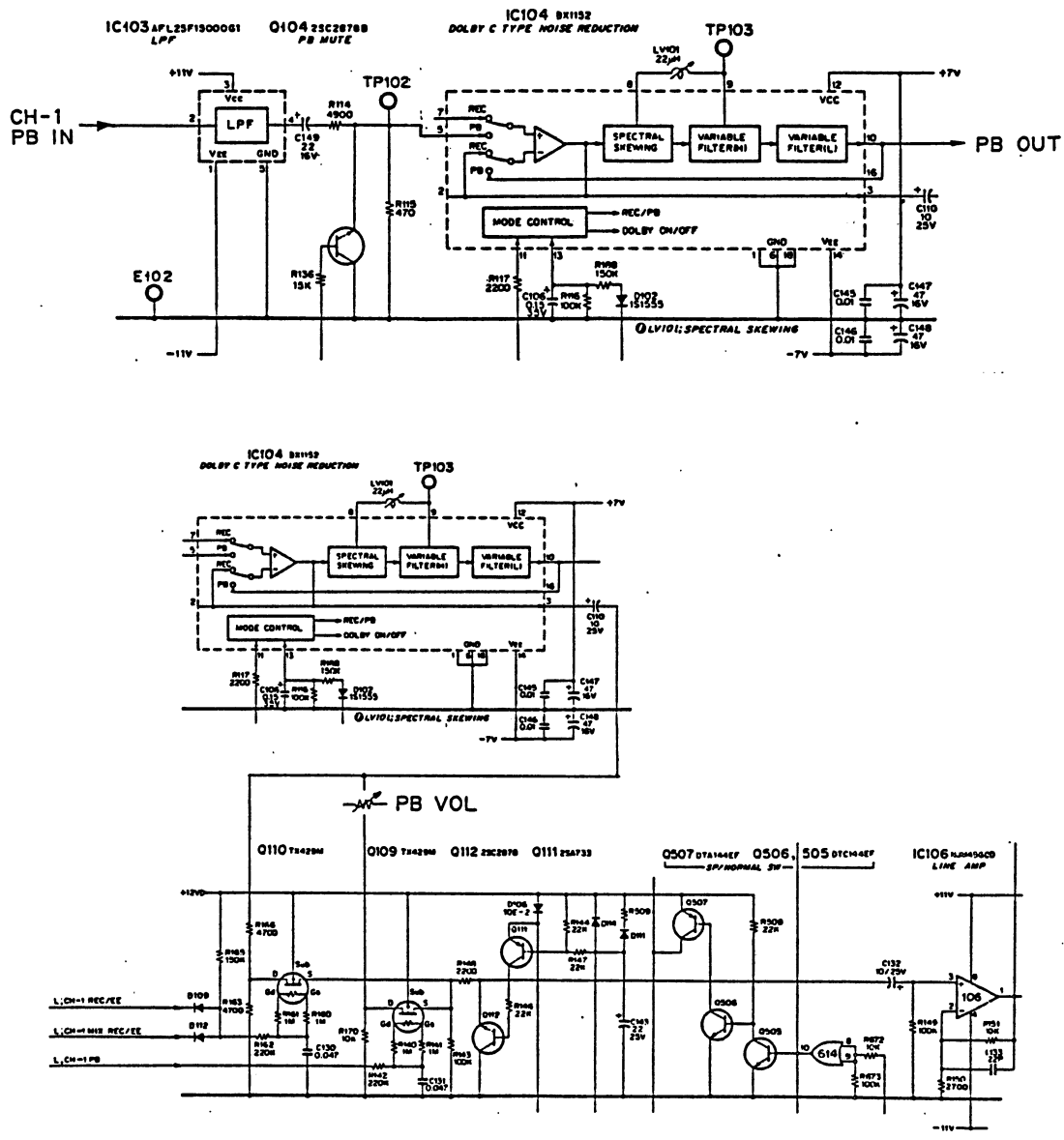

5. BIAS/ERASE OSCILLATOR CIRCUIT

The AU-63 board is provided with a bias oscillator and erase circuits.

The signal fed from the AU-63 board is controlled by a system control board. The block diagram of the oscillator circuit is shown below.

The H:OSC ON signal fed from the system control board to connector CN4-12 on the AU-63 board is input to switch Q404. Output from the switch makes a 71kHz oscillator circuit, consisting of Q402 and Q403, turn on.

Output from the 71kHz oscillator circuit is sent to four blocks; CH-1 erase driver, CH-2 erase driver, CH-1 bias driver and CH-2 bias driver. The CH-1 and CH-2 bias drivers are frequency-locked with respect to the 71kHz oscillator circuit. This in turn prevents beat from being generated from the two bias drivers.

Q435 through Q441 comprise a power supply circuit used for the bias driver. The bias current is changed over using SP and K tapes. When using the SP tape, an H: SP signal is input from connector CN5-7, and Q439 and Q440 are turned off. At this time, a voltage lowered from 12V to 1.2V is fed to the bias driver. When using the K tape, the bias current in CH-1 and CH-2 is adjusted using RV403 and RV404. For the bias current adjustment, therefore, RV401 and RV402 are adjusted using the SP tape, and the K tape current is adjusted using RV403 and RV404. As a result, the bias current is raised by 20% when using the SP tape as compared with the K tape.

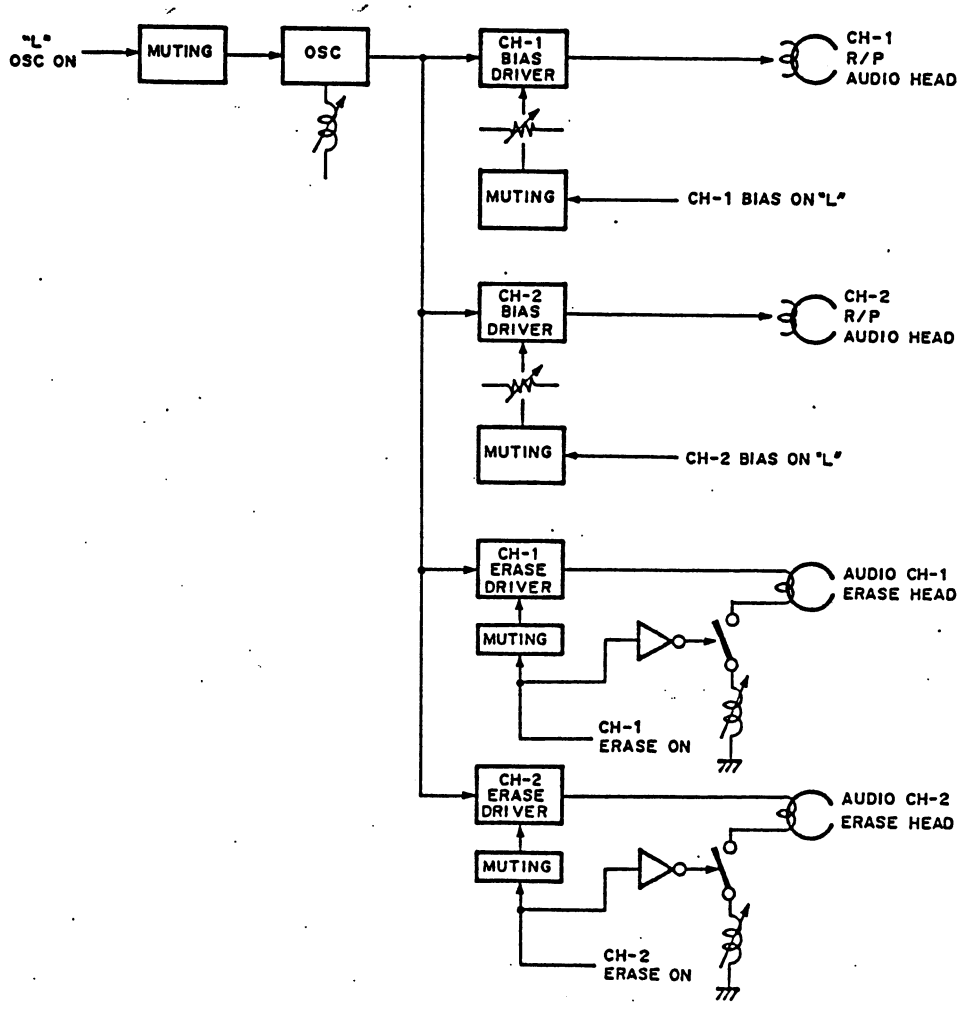

6. DOLBY RECORDING DETECTION

In the BVU-850P, an audio signal can be recorded and played back using the Dolby system. Dolby operation can be turned on or off using a Dolby switch in the REC mode, irrespective of the SP and K tapes used. Moreover, the pilot signal recorded in the audio signal is detected in the PB mode, irrespective of Dolby switch operation, to automatically turn on or off the Dolby operation.

Dolby recording is performed by mixing a 1/4 VD signal (12.5Hz) with the audio signal as a pilot signal. Consequently, 12.5Hz signal component detection in the PB mode enables the Dolby operation to be automatically turned on. This prevents the occurrence of erroneous operations.

6-1. Pilot Tone Recording Circuit

In the REC mode, a 1/2 VD signal fed from the servo circuit is selected by logic circuit IC524 on the CF-9 board. The selected 1/2 VD signal is sent to CTL IN of connector 37A on the AU-62 board. This 1/2 VD signal is divided into one-half (that is, 12.5Hz) using a D-type flip-flop.

This divided signal is converted into a sine wave using low-pass filter IC602 and input to connector CN4-3 on the AU-63 board. Thereafter, the input signal is phase-shifted using IC601 to align its phase with the recorded CTL signal phase, fed from Dolby pilot REC OUT of connector CN4-5, and mixed with the recording signal on the AU-62 board.

6-2. PB Pilot Tone Detection Circuit

This circuit is used to detect a 12.5Hz pilot signal in the audio signal which is recorded using the Dolby system. For output from a PB amplifier, a low-band signal component of 12.5Hz is removed using low-pass filter IC501 at TP105. Then the output signal is fed to a phase detector consisting of IC502 and IC503.

In the playback mode, a 1/2 CTL signal is input to IC601, phase-shifted using IC601 and RV603, and fed to phase detector IC503. The signal inverted using IC601 is sent to phase detector IC503.

A 12.5Hz signal component contained in the playback audio signal is multiplied by a 12.5Hz signal component. This component is obtained by dividing the playback CTL signal by using IC502 and IC503 in order to detect the pilot tone signal. In other words, only the 12.5Hz signal component which is synchronized with the 1/2 CTL signal is regarded as a pilot tone signal.

A high-level signal is output to either D501 or D503 by using phase detectors IC502 and IC503 even if the phase of the pilot tone and 1/2 CTL signals is inverted by 180 degrees.

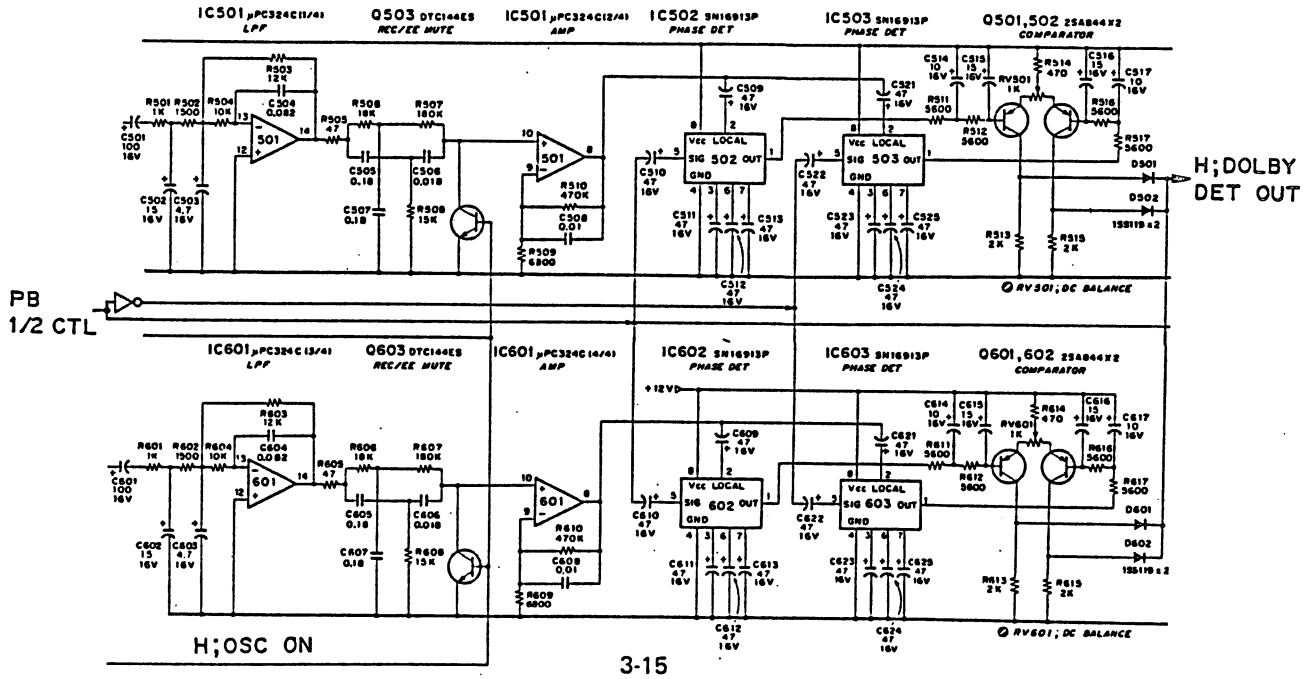

6-3. Dolby Logic Circuit

The H:DOLBY DET signal detected using a PB Dolby detection circuit on the AU-63 board is latched by D-type flip-flop IC603 on the AU-62 (2/2) board at the time of servo lock operation. Then, the signal passes through gate circuit IC604 and turns on the Dolby circuit. In the EE mode, the signal from a Dolby switch is output to terminal 24A on the AU-62 (2/2) board.

Moreover, the Dolby circuit can be manually turned on or off using switch S1. When switch S1-1 is turned on, switches S1-2 and S1-3 are set to the ENABLE mode. When switch S1-2 is turned on, the CH-1 Dolby circuit is turned on or off. When switch S1-3 is turned on, the CH-2 Dolby circuit is turned on or off. When switch S1-4 is turned on, the pilot tone signal is muted.

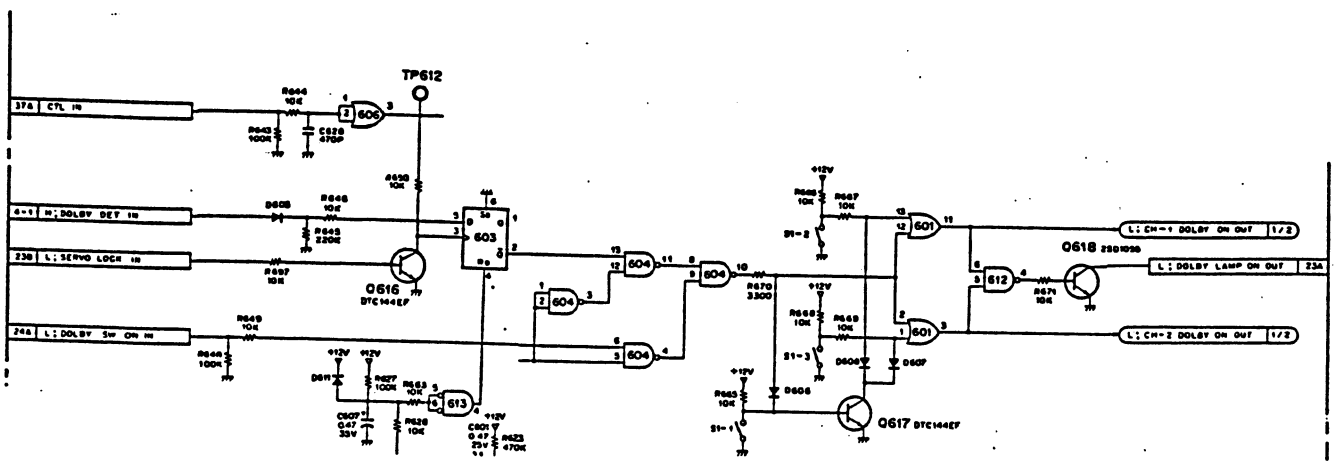

SECTION 4

SERVO CONTROL SYSTEM

SECTION 4
SERVO CONTROL SYSTEM

SERVO SYSTEM

Features such as full editing capability and bidirex search/jog functions can be achieved through the adoption of servo-controlled direct-drive systems.

The sophisticated drum and capstan servos are designed to cope with different tape speeds, and to achieve full synchronization with incoming syncs.

Fast access time and improved dynamic response have been achieved through the adoption of a reel servo system.

The servo circuitry can be separated into the following blocks:

A. SV-52A Board
  Drum Servo
  - Speed servo
  - Phase servo
    . Frame circuit
    . ϕ^2 loop
  Capstan Servo
  - Speed servo
  - Phase servo
  - Stop servo
  - Search mode control

} Normal mode

B. RS-3/RS-4 Boards
  Reel Servo
  - Speed servo
  - Tension servo

A. Drum and Capstan Servo: SV-52A Board

1. The CX194A

Perhaps the most salient feature in the composition of the drum and capstan servo circuitry is the adoption of a digital servo LSI: the CX194. Drum servo, capstan servo, ϕ^2 servo, and reference signal generator are all contained inside this IC. The digital IC implementation of such a servo circuit is desirable since digital signal processing offers stability of timing, achievement of sophisticated functions through data processing and a high degree of integration. The digital version still needs, however, a number of analogue peripheral circuits such as time constant and interface circuits.

The chip uses a linear compatible I^2L process featuring ion-implanted LEC (Low Emitter Concentration) low-noise transistors with 4um arsenic emitters. The I^2L gate characteristics are 8ns tpd (min), 1.686um^2 gate size, and 14uW power dissipation per gate with 5 fan-outs. The chip is 5.3 x 6.6mm^2 and has 3,400 I^2L gates and 350 linear elements. Fig. III-2 illustrates the structure of the chip, and Table 1 its main characteristics.

The CX194A needs two power supplies, one for the analogue circuitry, and one for the digital circuitry. After the replacement of the CX194A, the supply voltage must be readjusted.

I^2L speed-power product	0.4pJ	@ Ij = 10uA (5 collectors)
I^2L gate delay	20ns	@ Ij = 100uA (5 collectors)
NPN h_{FE}	500	@ Ic = 1mA V_{CE} = 3V
NPN f_T	1GHz	@ Ic = 1mA V_{CE} = 3V
NPN BV_{CEO}	6V	@ Ic = 100uA
NPN h_{FE}	20	@ Ic = 10uA V_{CE} = 3V
PNP f_T	20MHz	@ Ic = 50uA V_{CE} = 3V

Table 1. Main Characteristics of the LSI

2. Drum Servo

2-1. General Operation

Drum speed servo and phase servo perform the same functions as in any ordinary VTR servo: the speed servo ensures constant drum rotation, the phase servo matches the head drum position to the supplied vertical sync. The phase servo, however, is equipped with an additional loop, the ϕ^2 servo, which minimizes phase errors between the input video or external sync and the recorder's reproduced vertical sync. These errors are due to many reasons such as temperature effects and mechanical tolerances, so that the ordinary drum phase servo can hardly compensate this problem.

The phi square loop compares the reproduced vertical sync with the external sync reference. This eliminates "flagging" at the edit points (Fig 1).

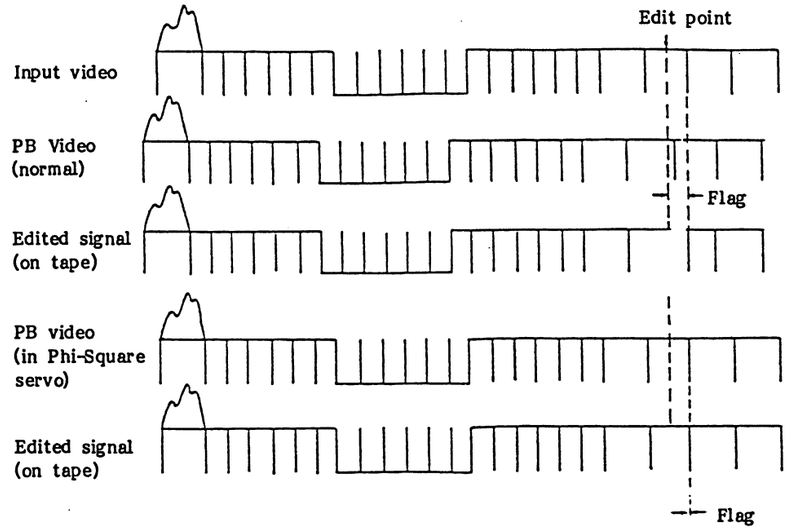

Fig. 1 Minimizing of "Flag" at Edit Point

During the search operation, the drum phase servo is switched to the AFC mode: automatic frequency control. Because in the search mode the tape speed is changed, the horizontal frequency deviates from its 15,625 Hz nomial value. One method of compensating this phenomenon is to alter the drum rotational speed.

When used in conjunction with a time-base corrector, the AFC circuit is disabled because the line-frequency errors are corrected by the TBC itself. If the time-base corrector position is selected on the front panel without a TBC connected, it is possible that during search operations, the horizontal frequency is lost on the monitor.

SP537 / Druck 189

2-2. Drum Speed Servo

The drum is provided with eight pieces of magnets, located on a circle. These magnets are detected by two speed coils PG(A) and PG(B) which are located 35 apart (Fig. 2). Each PG generates 8 pulses during one drum rotation interval. PG(B) pulses have a 35 phase shift with respect to PG(A) pulses (Fig. 3).

PG(A) is supplied to pin 32 while PG(B) is supplied to pin 33 of CX194A (Fig. 4). PG(A) pulses are reshaped, and then they trigger the speed MM. This MM delays the signal for about 380 us, and then sets the next S-R flip-flop. The delay can be adjusted by an external C-R network connected to pin 31 (drum free speed). The C-R network alters the pulse slope, hereby changing the point of intersection with a stable reference level. In this way, the flip-flop set time can be adjusted (Fig. 5, b-c).

The S-R FF is reset by the reshaped PG(B). Output Q generates a positive pulse from delayed PG(A) till PG(B). This pulse enables the next AND gate so that the 1/4 x 4.43 MHz clock signal can be passed to the 16-bit "speed detecting counter". The 1/4 x 4.43 MHz clock signal is generated internally.

The speed detecting counter counts the stable clock pulses during the flip-flop set time, which represents the drum rotational speed. After the counting is completed, the counter data are transferred to the PWM section. The transfer time is controlled by a reference signal so that the data transfer occurs during the flip-flop reset time, 8 times per drum rotation.

The pulse width of the PWM output signal is proportional to the counter data, and thus to the drum speed. The PWM signal is output as a speed error signal, through a tri-state buffer. This buffer is controlled by the same signal that governs the data transfer time from the counter to the PWM section. At the data transfer time, the buffer goes into the high-impedance mode: no PWM signal can be output and all errors due to an incomplete data transfer are avoided.

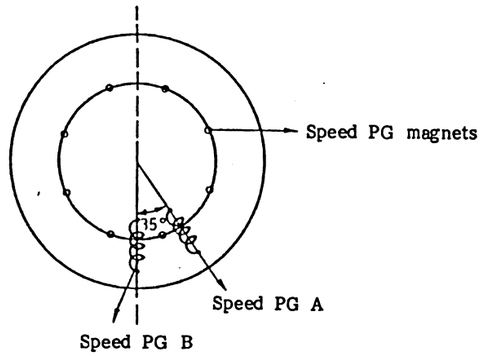

Fig. 2 Location of Speed PG

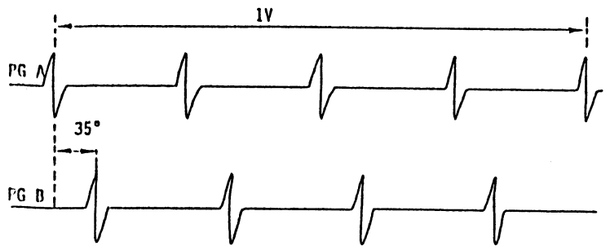

Fig. 3 PG Pulses

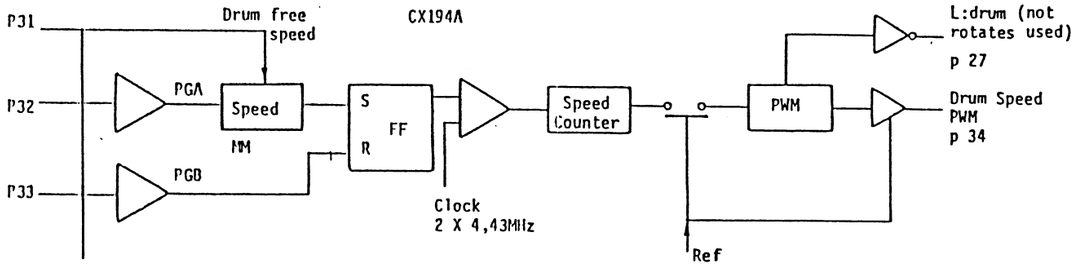

Fig. 4 Drum Speed Servo

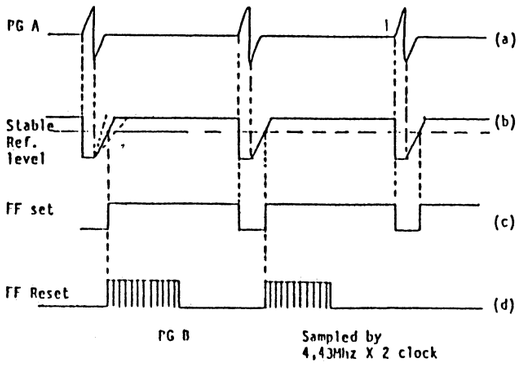

Fig. 5

2-3. Drum Phase Servo

The drum phase servo circuitry is analogous to the speed servo circuitry (see Fig. 6). The delayed phase PG sets the phase detector S-R flip-flop while the internally generated 1/2 VD resets the FF. Here again, the MM delay time is adjusted by the external R-C circuitry. In this manner, the switching position can be corrected.

The FF Q output enables the following AND gate from the timing of the switching pulse till the 1/2 VD timing. During that period, stable clock pulses are supplied to the "phase detecting counter". The counter data are then fed to the PWM section which, in addition, receives an error signal from the ϕ^2 servo. The PWM output is then buffered and supplied to pin 37 as the drum phase error.

Switch S1 between the PWM section and the output buffer changes position during the search mode. In this mode, an AFC ON signal is issued by the system control and supplied to pin 42 of CX194A. Now, instead of the drum phase PWM signal at pin 37, we can see the PB horizontal sync. This is used to correct for PB horizontal frequency errors during non-standard tape speeds.

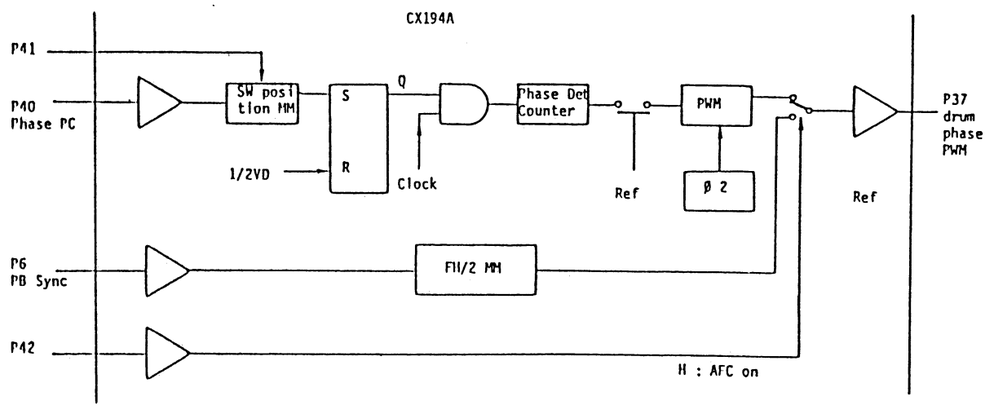

Fig. 6 Drum Speed Servo

SP537 / Druck 190

ϕ^2 Servo

See Fig. 7

In the playback mode the phi square comparator detects the phase relation between the PB vertical sync and the reference vertical sync. This generates a constant error for the drum phase servo.

In the record mode, the phase of the vertical reference sync and the phase PG pulse are compared.

In the edit mode, the machine changes from PB to insert or assemble and the PB sync is changed. However, the phi square comparator holds the error, which is detected in the PB mode, in order to prevent any phase jump at the edit point. The hold operation is activated by means of information eliminated from the PB vertical sync. Also in the edit assemble mode, the machine changes from PB to record, but switch S2 is maintained in the PB position. This is to prevent any change of the comparator error before the hold operation is active.

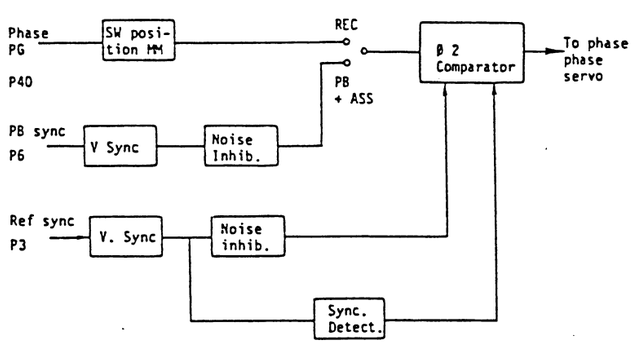

Fig. 7 ϕ^2 Servo

Head Switching (Fig. 8)

The phase PG pulse, supplied to pin 40, triggers the SW position MM. This monostable multivibrator delays the phase PG pulse until switching point A, and generates a reset pulse for the RF switching pulse S-R FF.

Speed PG(A) enters CX194 on pin 32 and is used to provide data to a 4-bit static shift-register. On the diagram this is termed PG gate. The PG gate is reset by the phase PG input, and provides a trigger to switch position monostable "B" after a 180 revolution. The monostable output is used to set the RF switching pulse FF. The RF switching pulse is obtained at the Q output of this FF, goes through an output buffer and comes out at pin 39.

If PB sync is available at pin 6, the RF switching pulse is routed through a D-type FF which is triggered by the PB sync. This way, the RF switching pulse is H-locked and RF switching noise is held at the H-sync position. This is to prevent any switching noise to be seen in the picture. The selection between H-lock or not is done by detecting the PB sync.

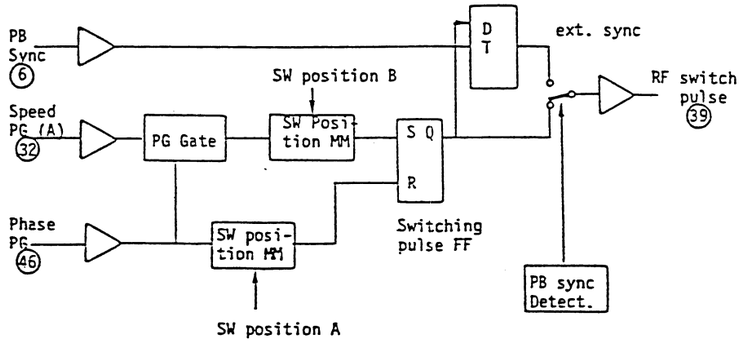

Fig. 8 RF Switching Pulse Generation

SP537 / Druck 191

2-4. Drum Servo Error Processing (Fig. 9)

The drum phase error from CX194, pin 37, is fed to TP5. In the normal mode, this error is amplified by IC8, and then passed to switch IC29 pin 2. In the search mode, the phase error pulse width modulator signal is changed to the off-tape line-frequency. This is routed through switch IC29 pins 12 and 14, and is amplified and fed to switch IC29 pin 1. RV12 must be adjusted for servo continuity when changing from the normal to the search mode. Switch IC29 changes state in accordance with the AFC ON signal. This signal is high during the search mode. However, when the TBC mode is set, the signal goes low, whether a TBC is connected or not. The drum phase error is subtracted from the low-pass filtered pulse width modulator output in a differential amplifier before the final error is fed to the drum motor via the PD-14 board.

Fig. 9 also shows a circuit arrangement termed the "picture splitting compensator".

Picture Splitting Compensator

Because of the construction of the brushless, electronically commutated drum motor, it is possible that even though the video head drum does one revolution in 40ms, the rotational rate may not be constant. This velocity error introduces a time-base error into the recorded or played back signal. As such errors are cumulative, it means that with subsequent generation copies, the error becomes greater. In an editing machine it is important that we try to minimize velocity errors as much as possible.

Should the drum motor increase or decrease its speed throughout a revolution, this change could be monitored at TP10. The function of the picture splitting compensator is to generate an anti-phase correction waveform which subsequently is mixed with the drum's speed PWM output signal after integration. Adjustment is by trial and error, however once set, it should not at any time need adjustment other than the replacement of the entire video head drum assembly.

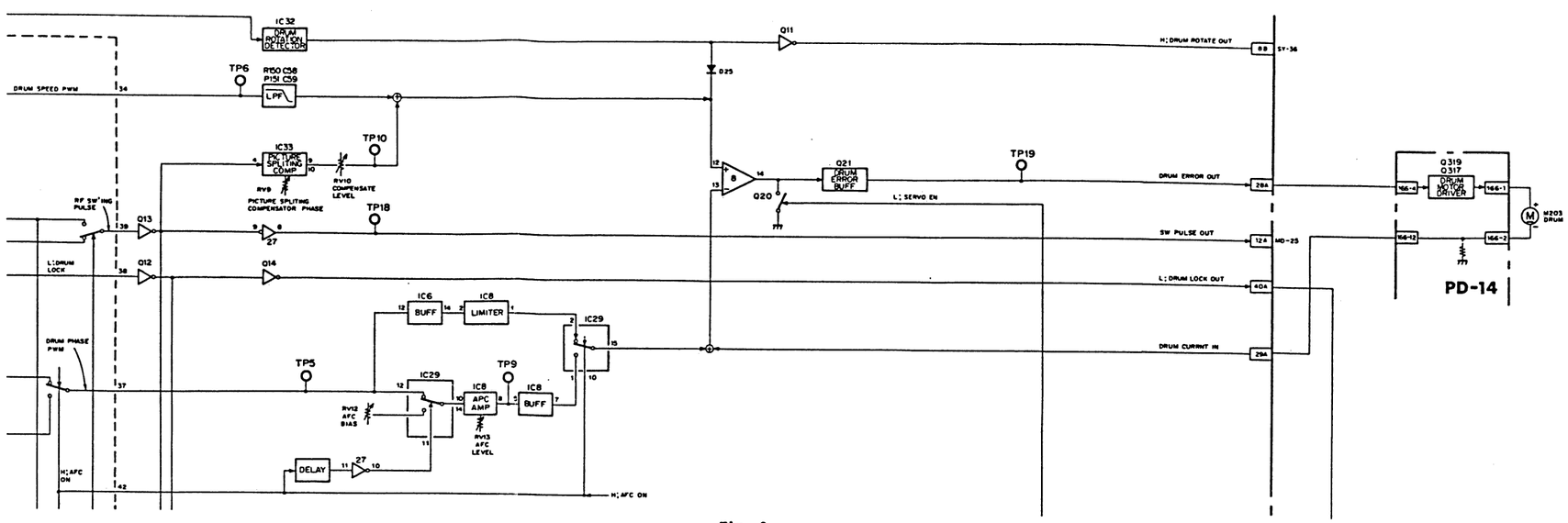

Fig. 9 a.

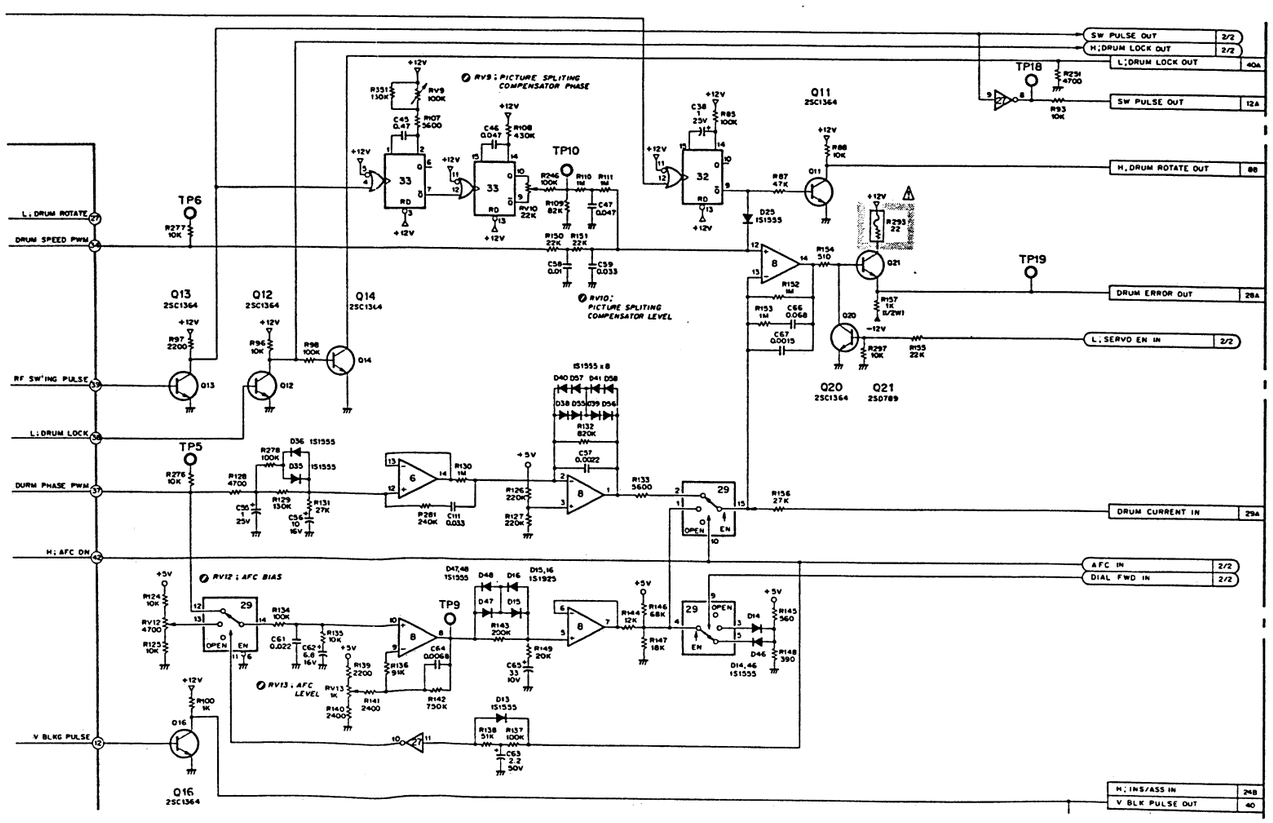

Fig. 9 b.

3. CAPSTAN SERVO

In the normal playback mode, the capstan speed and phase servos ensure adequate tracking. In the still mode, the capstan motor is stopped in a position that the guard band assumes either the bottom or the top of the picture. The search circuitry in the capstan motor servo allows the tape speed to be varied through the following speeds: 1/30, 1/10, 1/5, 1/2, 1, 2, 5 or 10 times the normal speed in either direction.

3-1. Capstan Speed Servo (Figs. 10, 11)

The newly developed direct-drive capstan motor has two built-in frequency generator (FG) signals available. These signals, termed FGA and FGB, are not generated in the conventional manner.

A rotary polarized permanent magnet is rotated in close proximity to a pair of Hall effect diodes. These magneto-diodes are spaced such, that at nominal capstan rotational rate, two signal at 450Hz are generated in quadrature. The timing difference between the shaped FGA and FGB signals represent a measure of the capstan motor's rotational speed. These signals are used to set and reset an S-R FF as explained in the video head drum speed control section.

Two other circuits are illustrated in Fig. 11. The forward/reverse detector utilises the fact that the FG signals are in quadrature. In the forward mode, FGA leads FGB by 90 ; in reverse capstan direction, the FGA signal lags behind FGB by 90 . By using a data latch, the Q output will change state, dependent on the rotational direction of the capstan motor. The output at pin 22 of CX194 is left unterminated and is not used on the BVU-800.

FGA and FGB signals are multiplied by 4 to provide a 4 x FG signal out at pin 19 of CX194. Pin 19 goes to the stop servo and external speed detect circuitry.

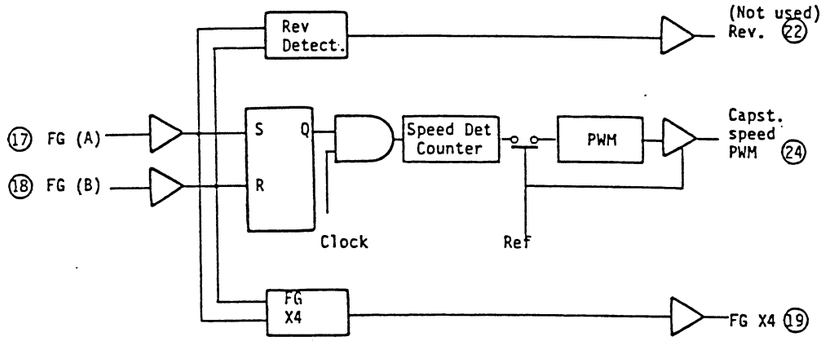

Fig. 10 Capstan Speed Servo

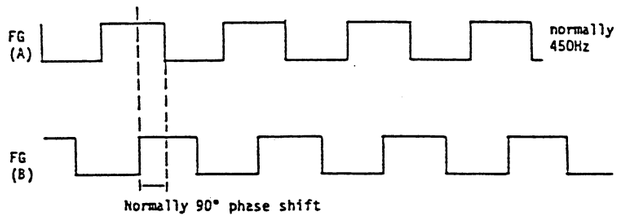

Fig. 11

3-2. Capstan Phase Servo

In normal PB mode, including insert mode, the capstan phase servo detects the phase relation between the CTL pulses and internally generated 1/2 VD. In the REC mode, the circuit detects the phase relation between the counted down capstan FG and 1/2 VD in order to stabilize the capstan speed.

In the PB mode, the 1/2 VD signal is delayed by the tracking MM. For tracking adjustment purposes, the amount of delay can be changed by an external R-C network. The delayed 1/2 VD pulses set the capstan phase detect S-R FF, while the PB CTL pulses reset the FF. The resulting Q output pulse acts as an enable pulse reset this FF. The resulting Q output pulse acts as an enable pulse for the following AND gate. In the same way as before, a capstan phase error PWM signal is generated and output at pin 20.

In the assemble mode, the machine changes from PB to REC. To maintain the continuity of the servo at the edit point, the counted down FG pulses should have almost the same phase as the PB CTL. Therefore, the PB CTL pulse resets the count-down circuit for FG. For the same reason, the delayed 1/2 VD pulses are used instead of the non-delayed ones (see Fig. 12).

The capstan lock detector detects the phase detect counter data and generates a low level when the 1/2 VD and CTL pulses have almost the same phase.

The capstan speed detector detects the 4 x FG frequency and generates a DC voltage as below:

1/10 speed and more → 5V
1.20 → 1/10 speed → 2.5V
<1/20 speed → 0V

Let us now consider the output signals from CX194 and the peripheral circuitry involved.

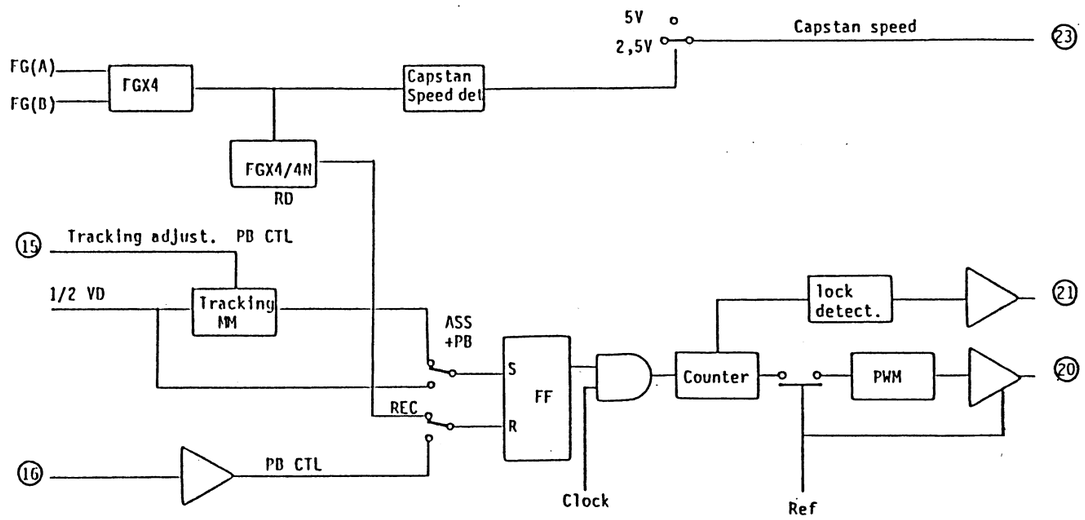

Fig. 12 Capstan Phase Servo

3-3. Capstan Servo Error Processing (Fig. 13)

The peripheral capstan servo circuitry can be considered in three main steps:

a) Normal mode
b) Search mode
c) Stop servo

a) In the normal mode, the capstan servo in PB ensures accurate tracking, and in the record mode it maintains stable speed control. The capstan speed PWM output (TP8) is integrated across a LPF and fed to pin 6 of IC6. This IC is a differential amplifier where the integrated phase PWM error signal is mixed. Control RV11 sets the capstan free speed. The output of IC6 is routed to capstan control selector IC17. The selected control signal is passed to the motor drive circuit on the PD-19 board via transistor Q28.

One new feature is the application of a synchronizing signal. The signal is supplied via the remote 2 connector and is used to speed up the capstan motor to achieve V sync phasing between the signal on tape and the signal to be recorded on the tape during an edit.

b) Multiplexer IC17 selects the capstan motor control signal as follows:

Multiplexer Control Signal		Channel Select	Mode
B	A		
0	0	0	Normal
0	1	1	Search
1	0	2	Transient
1	1	3	Synchronize

In the normal mode, A and B are low and the normal capstan control, derived from the speed and phase PWM, is selected. If A and B are both high, the colour synchronizing signal from the CF-9 board is chosen. In the search mode, only pin A goes high and a DC control voltage in accordance with the desired speed is applied to the motor.

The speed command is generated on the system control board. Pin A goes high when:

1. The pinch roller is ON, and in the search mode
2. The SERVO EN signal is L
3. Edit still mode

When the BVU is in the FAST REV mode, and if suddenly the FWD mode is set up, pin B of IC17 is set high for a moment.

During that time, the x1 DC control voltage is supplied to the capstan motor in order to set up the normal FWD mode rapidly.

The same happens when the REV x 5 mode is changed to the REV x 10 mode. In the REV x 10 mode, the tape is not capstan-driven so that the capstan control can be brought back to normal, waiting for a new command.

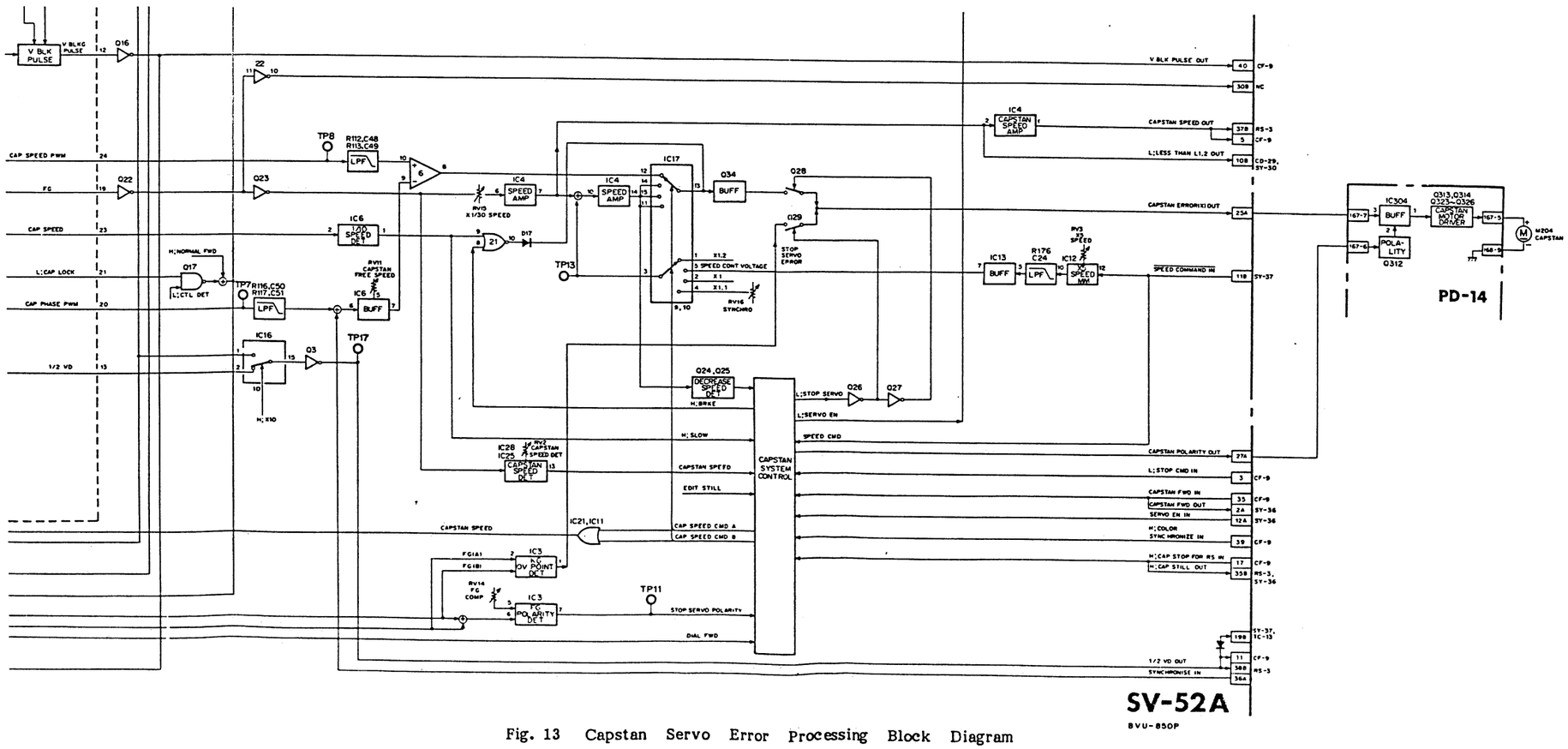

Fig. 13 Capstan Servo Error Processing Block Diagram

c) In the still mode, the tape is stopped such that the guard-band noise is limited to the upper or lower part of the screen.

This can be obtained as follows: When the search still mode is set up, pin A of IC17 goes high and a 1/15 speed control voltage is supplied to the capstan motor. The tape moves at 1/15 of normal speed until the correct tape position is sensed. The speed command then becomes a stop command, and IC19 pin 10 goes low (see Fig. 14).

This signal is gated through IC21 by the "capstan speed: SLOW" signal and applied to the base of transistor Q26. This enables switch Q29, and the stop servo error signal is passed to the motor drive circuit. The stop servo holds the tape in the correct still position. The capstan speed and rotation polarity are detected, and any attempt to rotate in either direction is prevented by a counterforce from IC3 pin 1.

IC16 selects the motor polarity control. In the stop mode, the signal from TP11 controls the motor rotational direction. In the other modes, the rotational direction is set up in accordance with the search dial position or the edit mode control (IC16 pin 13).

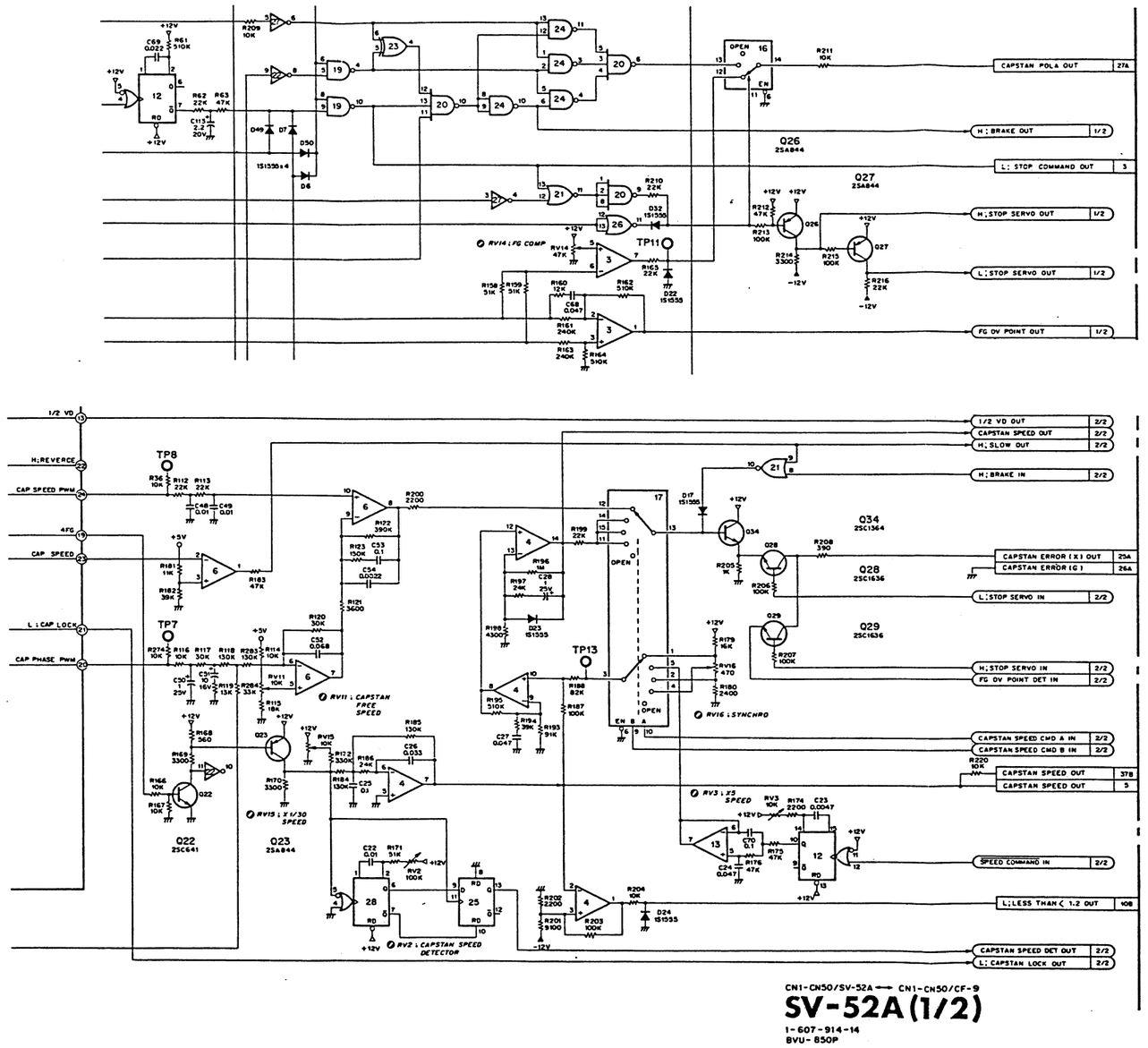

Fig. 14 Capstan Servo

SECTION 5

REEL SERVO SYSTEM

SECTION 5
REEL SERVO SYSTEM

5-1. Outline

5-2. SEARCH and STILL/STOP Modes
— Operation only in Reel Tension Servo Circuit —
(1) Block diagram of SEARCH and STILL/STOP modes
(2) cds tension detector
(3) Tension detector
(4) Tension target value circuit and comparator

5-3. Reel Motor Drive Circuit

5-4. Normal FWD Mode
— Combined use of tension servo and mechanical servo/mechanical torque —

5-5. FF Mode and REW Mode
— Combined use of tension servo and speed servo —

5-6. Brake Operation

5-7. Control Function Gate Circuit

5-8. Tape Protection Circuit

5-1. Outline

. Electrical servo (See Fig. 5-1.)

A magnetic tape is rewound from the supply reel table to the take-up reel table. In the BVU-850P, the supply reel table is provided with a direct-coupled dedicated DC motor. The take-up reel table is also provided with a dedicated DC motor. The rotation of the two reel tables is controlled by the DC voltage which is applied to the DC motors. Reel table rotation is thus electrically controlled by a reel servo circuit and directly coupled without using a belt, idler, or clutch.

. Reel table rotation detection (See Fig. 5-2.)

As the DC motor speeds up or slows down, the reel table rotation increases or decreases. Magnet rings with 48 magnets are provided at the bottom of the take-up and supply reel tables. A change in the magnetic field is detected using a DME element. DME output is 96 cycles per rotation. Rotation speed of the reel tables is detected using the DME output.

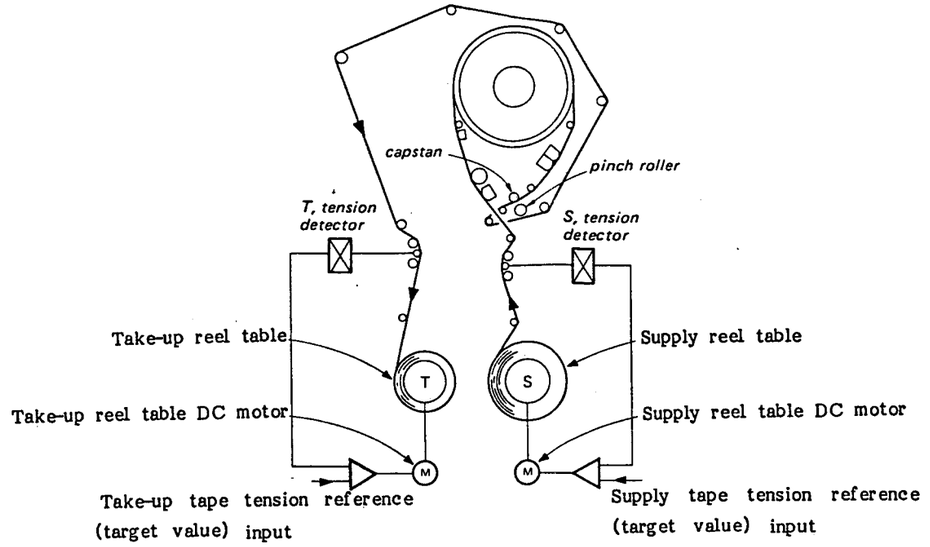

Fig. 5-1 Electrical Reel Servo Mechanism

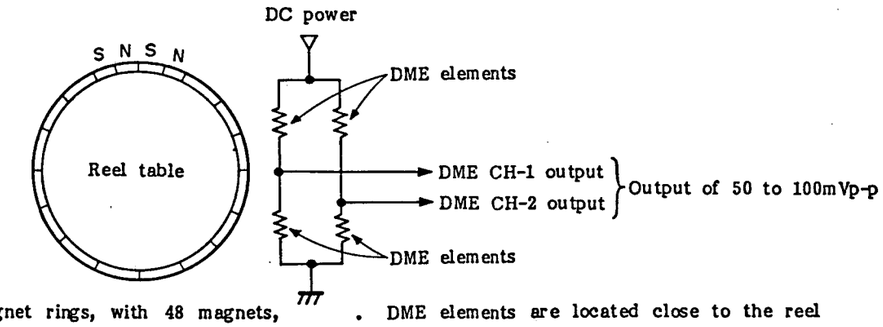

. Magnet rings, with 48 magnets, provided on the reel table
1 CH: 96 cycles/rotation

. DME elements are located close to the reel table and mounted on the EM-1 board. CH-1 and CH-2 outputs are phase-shifted by 90 degrees.

Note: DME is abbreviation for Divided Magneto-resistive Element.

Fig. 5-2 Reel Table Rotation Detector Using Magnet Rings and DME Elements (DME-FG)

. Tape tension detection (See Figs. 5-3 and 5-4.)

As the DC motor speeds up or slows down, the tape tension increases or decreases. Two tape tension detectors are provided on the tape transport path. They enable the tape tension at the supply and take-up reel sides to be detected independently. The tape tension detectors consist of a combined LED and cds photobridge. Light from the LED reaches the cds. A slit plate (shielding plate) located between the LED and cds is supported using a plate spring. When the tape tension increases, the slit plate is pushed toward the tape, When the slit light position amount from the LED changes, the output voltage from the cds photobridge changes. This enables each tape tension to be detected.

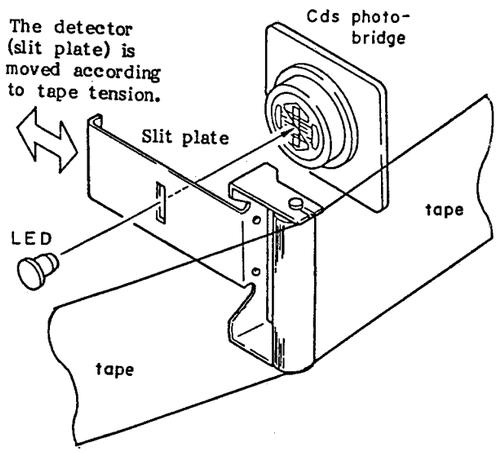

Fig. 5-3 Tape and Tape Tension Detector

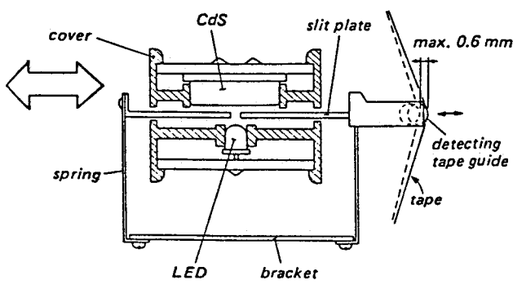

Fig. 5-4 Tape Tension Detector

. Block diagram of reel servo circuit
(See Fig. 5-5.)

The reel servo circuit is mounted on the RS-3 and RS-4 boards. The supply and take-up reel motors are controlled by the following:

1. Supply reel speed servo circuit,
2. Take-up reel speed servo circuit, and
3. Supply/take-up reel tension servo circuit.

. VTR operation modes and their corresponding reel servo operations
(See Table 1.)

Circuits are selected according to the VTR operation mode. When a pinch roller is pressed against to the capstan, the tape tension is separated. Consequently, VTR operations are classified into two modes: in one mode, the pinch roller is pressed against the capstan; in the other mode, it does not. Reel servo operations are described here according to the procedures shown in Table 1.

(1) Reel servo operation in the SEARCH mode
(See Fig. 5-1.)

In the SEARCH mode (five times normal speed in the forward direction to five times normal speed in the reverse direction via STILL mode), the pinch roller is pressed against the capstan at all times, so the tape speed is determined by the capstan rotation.

The supply and take-up reel motors independently obtain information, from supply and take-up tension detectors while the pinch roller is pressed against the capstan. Moreover, the supply and take-up reels are controlled by the tension servo to obtain a constant tape tension. In this case, speed servo circuits are not used (see Fig. 5-1). The tension servo in the SEARCH mode enables stable tape tension to be obtained at the supply and take-up sides. In the STOP mode, the pinch roller is released from the capstan, but only the supply and take-up reels are controlled by the tension servo.

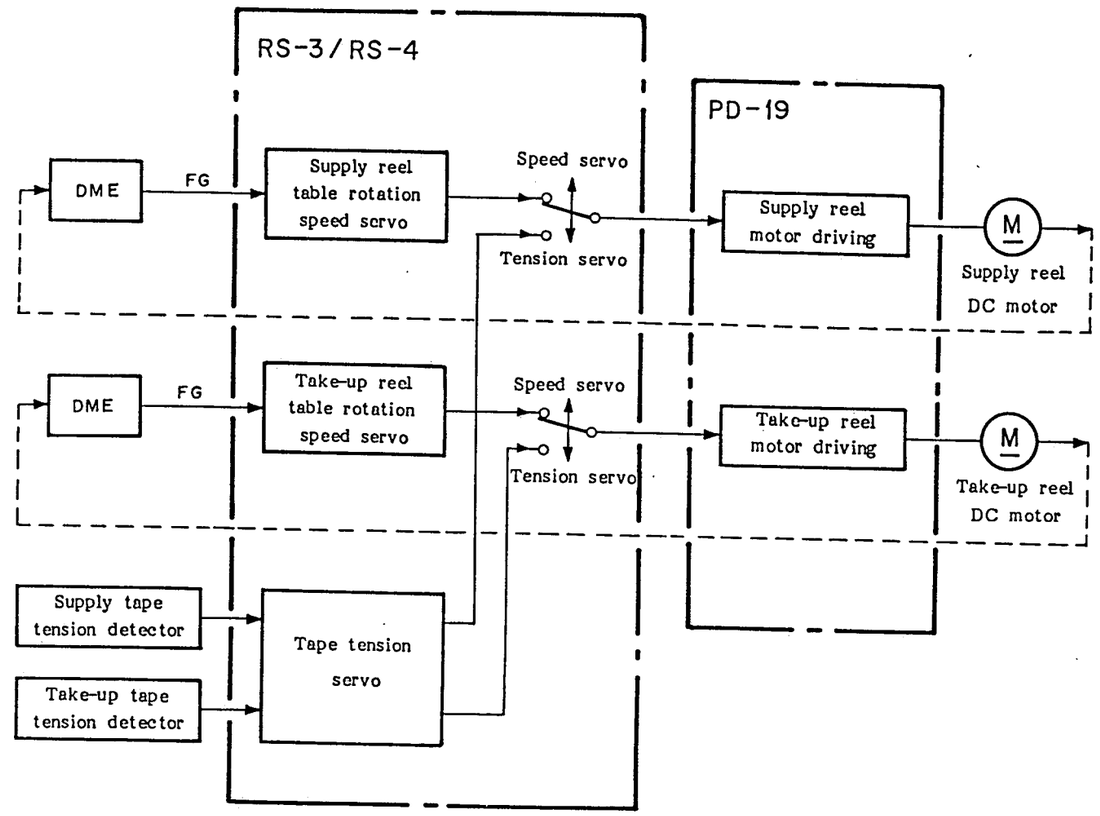

Fig. 5-5 Block Diagram of Reel Servo Circuit

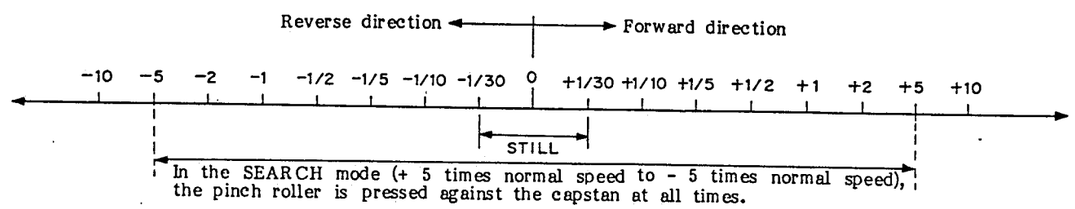

Table 5-1

SP537 / Druck 198

Table 1 VTR Operation Modes and Reel Servo Operations

Mechanical conditions (See the figure below.)	VTR operation modes	Reel servo operations		Remarks	Pinch ON
		Take-up reel motor	Supply reel motor		
Threading-2 end mode	+ 5 times normal speed ↑ SEARCH STILL ↓ - 5 times normal speed	Tension servo	Tension servo	The take-up and supply tape tensions are separated by a capstan and pinch roller.	○
	NORMAL PLAYBACK	Tension servo	Mechanical tension regulator	The same as the above	○
	STOP	Tension servo	Tension servo	The pinch roller does not press against the capstan. Supply and take-up tapes are pulled by low tension.	×
	FAST FORWARD	Speed servo	Tension servo	The tape is threaded onto the head drum. (Note 1)	×
	REWIND	Tension servo	Speed servo	The same as the above.	×
	STANDBY	Motor OFF and mechanical braking	Motor OFF and mechanical braking	The tape on the head drum is slacked to stop drum rotation.	×
	Braking	Torque driving	Torque driving		×
Mode between threading-2 end and unthreading end	Threading-1 mode	Mechanical braking	Torque driving		×
	Threading-2 mode	Mechanical braking	Tension servo		×
	Unthreading-1 mode	Torque driving	Mechanical braking	Auto threading is performed during power ON, tape protection, and dew condensation.	×
	Unthreading-2 mode	Tension servo	Mechanical braking	The same as the above.	×
	Unthreading-1 mode	Mechanical braking	Torque driving	Unthreading is performed by VTR operation commands.	×
	Unthreading-2 mode	Mechanical braking	Tension servo	The same as the above	×

Notes:

1. When a cassette tape is inserted into the VTR, the tape is threaded onto the head drum. (A leader tape is not detected during in the threading mode.)
2. When the leader tape is detected in the threading mode, the VTR enters the short FF and short REWIND modes. In this case, mechanical braking is applied.
3. Mechanical braking is performed during threading, unthreading, standby, tape protection, and power OFF. Usually, mechanical braking is not used.
4. The mechanical conditions are shown below.

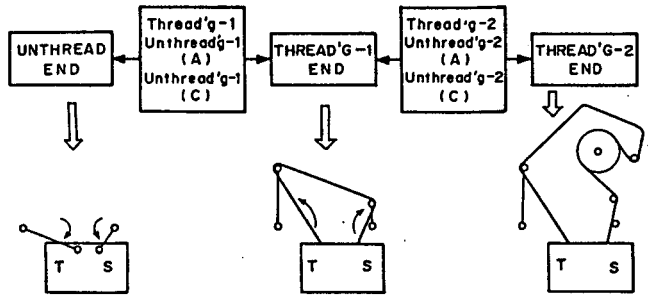

(2) Reel servo operation in the normal PB mode

In the normal PB mode, the pinch roller is pressed against the capstan. Therefore, the tape speed is determined by capstan rotation. As shown in Table 1, the take-up reel motor is controlled by a tension servo circuit. At this time, the take-up reel is controlled by the tension servo so that the take-up tape tension is 100g.

In the normal PB mode, the supply side is controlled by a mechanical tension regulator, and the supply reel motor is not controlled by an electrical reel servo because the mechanical tension regulator includes less jitter in the playback video signal.

(3) Reel servo operation in the STOP mode

In the STOP mode, the pinch roller is released from the capstan. Therefore, tape is not transported using the capstan. A low tension is applied to the tape by the take-up and supply reel motors (a tape tension of 30g is added to the supply and take-up sides). As a result, the tape does not run in either the forward or reverse directions because of its balanced tape tension. At this time, the video head touches the tape, and the playback picture can be obtained.

(4), (5) Reel servo operations in the FF/REW mode

The mode in which the pinch roller is pressed against the capstan includes recording and playback operations, etc. The FF/REW mode includes other important operations. The reel servo operations in the FF/REW mode are roughly described below. For the detailed circuit description, see Steps 5-3 and 5-4.

In the FF/REW mode, the pinch roller is released from the capstan. The tape is threaded onto the head drum, and it runs at a high speed. The FF, REW, and STOP modes with the tape threaded onto the head drum reduce the tape access and editing times.

FF/REW operations can be performed at high speed by adding a proper tension to the tape and pulling it at a high speed. Therefore, the tape is pulled in the forward or reverse direction while the tape tension is detected at all times. The tape transport and reel servo operations enable FF to be performed in 4 min. and REW in 2.5 min.

Servo operation in the FF mode

In the FF mode, the take-up reel motor is controlled by the speed servo, and the supply reel motor is controlled by the tension servo. The tape speed and tension in the FF mode are determined by the above two-system servo loop.

The block diagram of the take-up reel motor controlled by the speed servo is shown in Fig. 5-7. Voltage applied to the take-up motor detects rotation of the take-up reel table by using the DME element. Moreover, the voltage provides a stable rotation speed of the take-up reel table with respect to a load torque fluctuation. The DME element provides supply reel table rotation speed information to the take-up motor. In the FF mode, the take-up reel motor is driven to obtain a stable rotation of the supply reel table. In the SEARCH mode of 10 times normal speed, a playback CTL signal is detected to make the tape run at 10 times normal speed.

In the FF mode, the voltage applied to the supply motor is controlled to obtain a constant tape tension, as shown in Fig. 5-6. For the tape tension servo loop, the supply tape tension is detected using cds to control the supply motor (the supply motor is controlled so that the supply tape tension is stabilized (25g). The take-up tape tension is also detected to control the take-up motor so that it does not exceed 360g.

The REW operation is performed in the same manner as the FF mode, and only the take-up and supply sides are reversed.

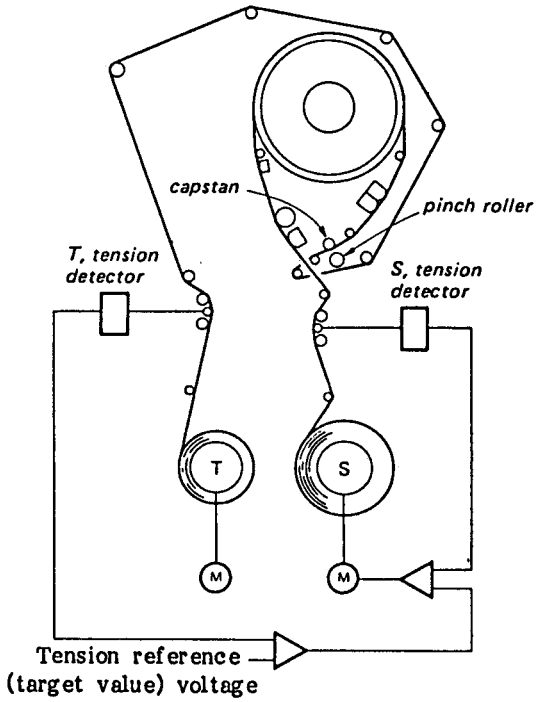

Fig. 5-6 Tape Tension Servo in the FF Mode
(Take-up and supply sides are replaced for tape tension in the REW mode.)

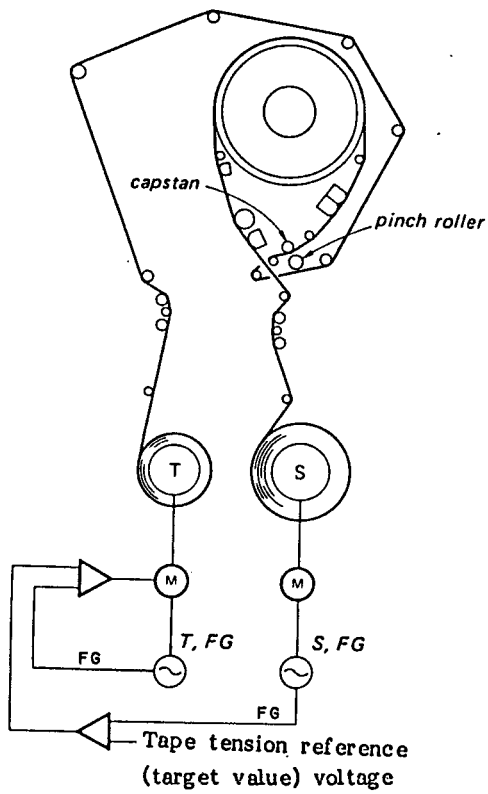

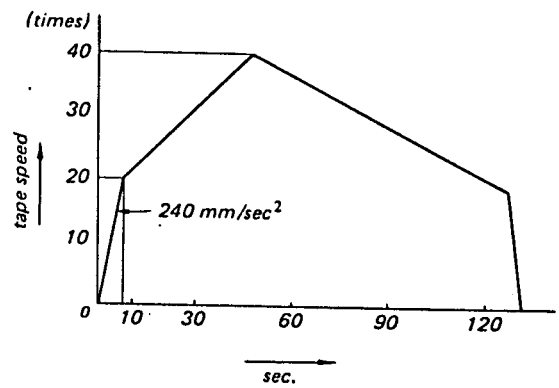

Fig. 5-7 Tape Speed Servo in the FF mode
(Take-up and supply sides are reversed for tape speed servo in the REW mode.)

(6) Reel servo operation in the STANDBY mode

In the STANDBY mode, no signal voltage is sent to the reel motor and only mechanical braking is applied to both the take-up and supply reel tables. As a result, the tape tension is not stabilized, and the tape threaded onto the head drum is slacked. Drum rotation is also stopped.

(7) Braking

To stop reel table rotation and tape transport, a current is sent to the reel motor in the direction opposite to the tape transport, generating, a torque. In this case, mechanical braking is not applied to the take-up and supply reel tables. This braking torque stops the tape transport.

The braking torque and its generating direction vary depending on the VTR modes established prior to braking and the cassette tapes used (KCA and KCS). For further details, see "Reel Braking Circuit" in 5-5.

(8) Reel servo operation in the threading-1 mode

As shown in Table 1, when the cassette tape is inserted into the VTR, the tape is pulled out of the cassette compartment using an arm during threading-1 mode. To thread the tape, braking is applied to the take-up reel table to fix it, and a torque of 200g (KCA) or 140g (KCS) is applied to the supply reel table. Therefore, the tape is supplied from the supply side during threading mode. For further details, see Step 5-6.

(9) Reel servo operation in the threading-2 mode

During threading-2 mode, the tape is pulled out of the cassette compartment using an arm, the threading ring is rotated, and the tape is threaded onto the head drum. At this time, the pinch roller is located just in the front of the capstan.

The take-up reel table in the threading-2 mode is fixed by mechanical braking as in the threading-1 mode. The supply reel table is given a tension of 30g. During the threading-2 mode, therefore, the tape is supplied from the supply side as in the threading-1 mode.

(10), (11), (12), (13)

Reel servo operation in the unthreading-1 and unthreading-2 modes

As shown in Table 1, the unthreading-1 and -2 modes (A) are caused during tape protection, dew condensation detection, and power ON. The above causes do not occur during normal operations. Mechanical braking is applied to the supply reel table only in the unthreading-1 and -2 modes (A). The tape is rewound onto the take-up reel.

The unthreading-1 and -2 modes (C) are caused when a command signal is input and a mode in selected by pressing the function buttons on the VTR operation panel (as in remote control operations). These operation modes are normal and operated in usual VTRs. In the unthreading-1 and -2 modes (C), mechanical braking is applied to the take-up reel table to fix it. The tape is rewound onto the supply reel by rotating to the supply reel table.

5-2. SEARCH and STILL/STOP Modes

— Operation only in reel tension servo circuit —

5-2-1. Block diagram of SEARCH and STILL/STOP modes

In the SEARCH and STILL/STOP modes, reel servo operations are performed in accordance with the connections shown in Figs. 5-8 and 5-9.

In the SEARCH mode, the tape runs with the pinch roller pressed against the capstan. The tape speed is determined by the capstan motor rotation. To make the tape run in the SEARCH mode of five times normal speed, the capstan motor should be rotated at five times normal tape speed. (The maximum speed in the SEARCH mode). When the SEARCH mode is canceled and the pinch roller is released from the capstan, the tape runs at five times or more the normal speed in the FF or REW mode.

To make the tape run stably in the forward direction during SEARCH operation, reel rotation is controlled by the tension servo circuit. In this case, the speed servo circuit in a reel servo is not used. The reel servo maintains stable tape tension.

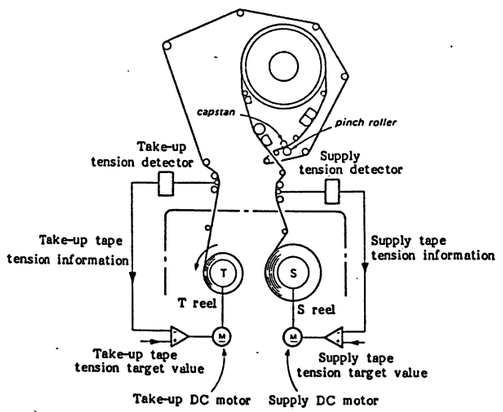

Fig. 5-8 Reel Servo Block Diagram in SEARCH Mode (Only the tape tension servo is applied, not the speed servo.)

. Tape tension

In the SEARCH mode of 1/30 to 5 times normal speed in the forward direction, the tape tension at the supply side is 50g and that at the take-up side is 100g.

In the SEARCH mode of 1/30 to 5 times normal speed in the reverse direction, the tape tension at the supply side is 100g and that at the take-up side is 50g.

In the STILL mode of 1/30 times normal speed in the forward and reverse directions, tensions (30g) in the supply and take-up reel tables are balanced At this time, the pinch roller is pressed against the capstan.

The STOP mode operates in the some way as the STILL mode, except that the pinch roller is released from the capstan.

. Description of block diagram

As shown in Fig. 5-8, cds tension detectors are provided, at the take-up and supply sides. An electrical signal (DC voltage) corresponding to the tape tension is obtained as tape tension information (at the supply side) from the supply tension detector. The specified supply tape tension varies depending on the modes. The specified value is 50g in the FORWARD SEARCH mode.

The DC voltage corresponding to a supply tape tension of 56g is generated as a tape tension referemce (at the supply side) by the resistor network. This reference is compared with the actual tape tension information by an operational amplifier. The resultant signal difference is supplied to the reel motor (at the supply side) to control the supply tape tension. The operation at the take-up side is the same as that at the supply side.

The block diagram in Fig. 5-9 shows the signal flow. The SEARCH mode in the forward direction is given as an example. The take-up tape tension is detected using the take-up tape tension detector (cds). The resultant tape tension is sent to the RS-4 board as a DC voltage, amplified, and passed through the automatic zero adjustment circuit. The output of the adjustment circuit is a DC voltage indicating the instantaneous tape tension. This output signal is sequentially compared to the target voltage, and the resultant signal difference is output. Various reference voltages are provided so the optimum tension is obtained according to the VTR modes. These reference voltages are selected for use. In the FWD SEARCH mode, the reference voltage is provided in advance so that the take-up tape tension is 100g. However, when the instantaneous tape tension differs from the reference the difference is output to the reel motor drive circuit. The difference voltage between the detector output and reference is called the tension servo signal (at the take-up side). The reel motor drive circuit consists of a speed servo voltage amplifier and tension servo current amplifier. In the tension servo circuit, the current is amplified using the tension servo current amplifier and supplied to the take-up reel motor. The reel motor torque at the take-up side is transmitted through the reel table to the take-up side tape and activated to reach the reference torque value.

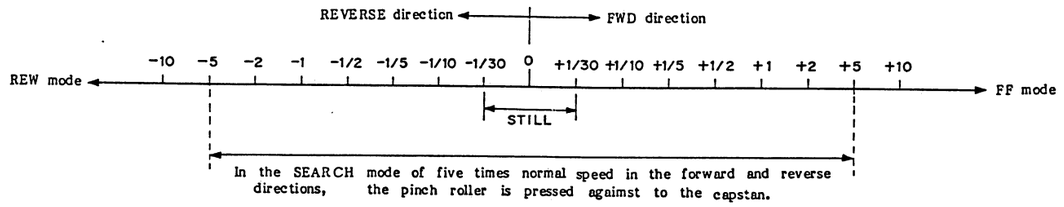

Table 5-3

Mode \ Tension	Tension servo target value		Remarks
	Take-up side	Supply side	
FORWARD	110g	56g	See Step 5-4.
REVERSE	56g	110g	
STILL	34g	34g	
(Reference)			
NORMAL FWD		(Mechanical servo)	
UNTH-2(A)	200g	(Mechanical braking)	
UNTH-2(C)	(Mechanical braking)	100g	
TH-2	(Mechanical braking)	34g	

Table 5-4

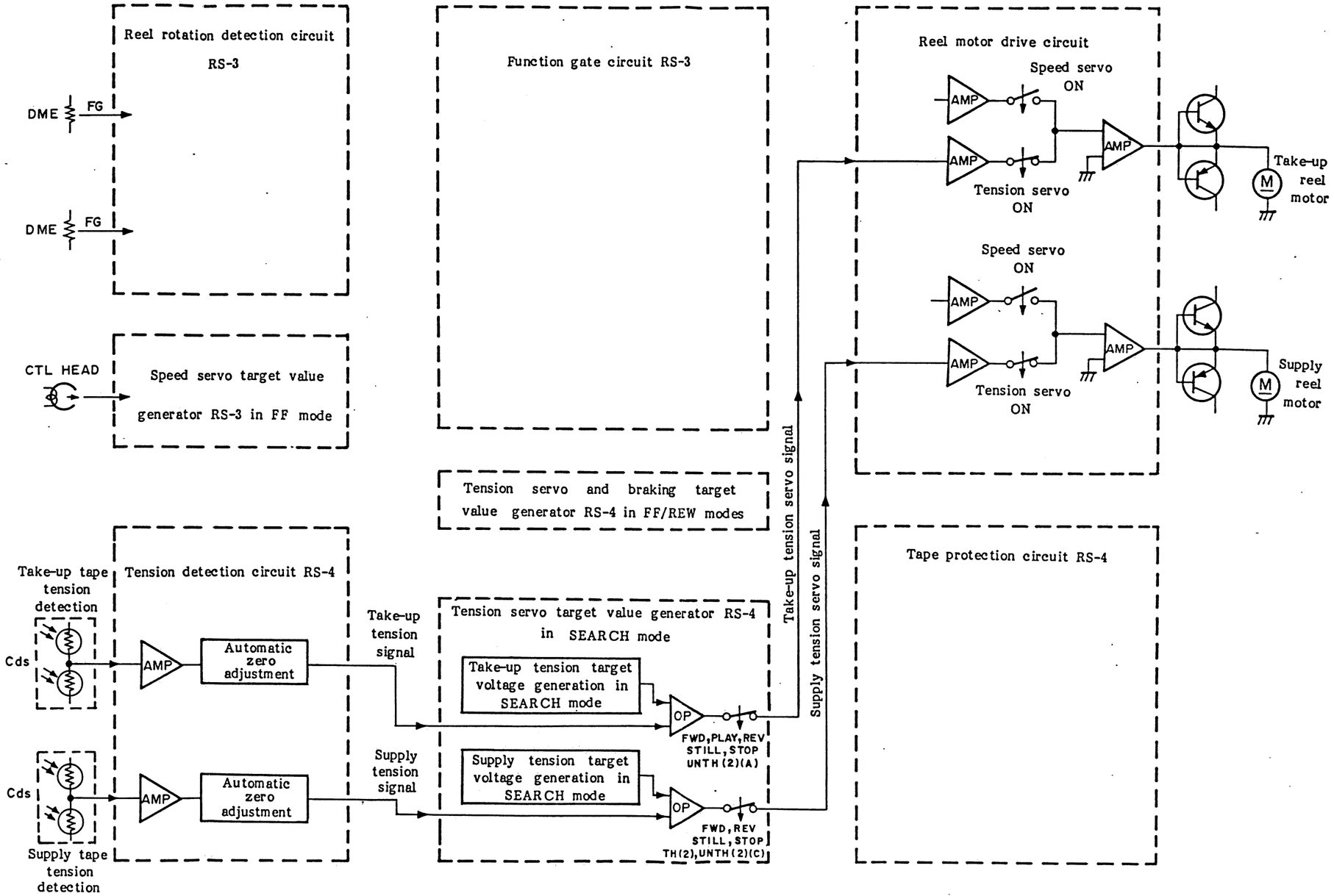

Fig. 5-9 Reel Servo Block Diagram in SEARCH and STILL/STOP Modes

5-2-2. cds tension detector

The tape tension detector converts the mechanical tape tension into an electrical signal. As shown in Fig. 5-10, this detector consists of an LED, tension detecting arm with the slit plate, and cds photobridge.

Light from the LED passes through the slit plate and reaches the cds photobridge. As shown in Fig. 5-11, the detecting arm is supported by a plate spring through the support stand. When the tape does not touch the detecting arm, the arm is fully extended, that is, moved to the rightmost position as shown in Figs. 5-10 and 5-11. Automatic zero offset adjustment is made under such a condition.

When the tape tension occurs, the detecting arm is pushed in by the tape. When the detecting arm is moved due to the tape tension, the slit position is moved just as much. As a result, the light from the LED falls on a different point on the cds surface.

As shown in Fig. 5-12, the cds is divided into cds-1 and cds-2 areas. The electrode lead wire has three pins, pin 1, pin 2, and pin 3 (see Figs. 5-13 and 5-14). The cds element is inserted between +12V and GND. Using voltage dividers consisting of two cdses, the voltage at the center position (pin 2) is changed between +12V and GND.

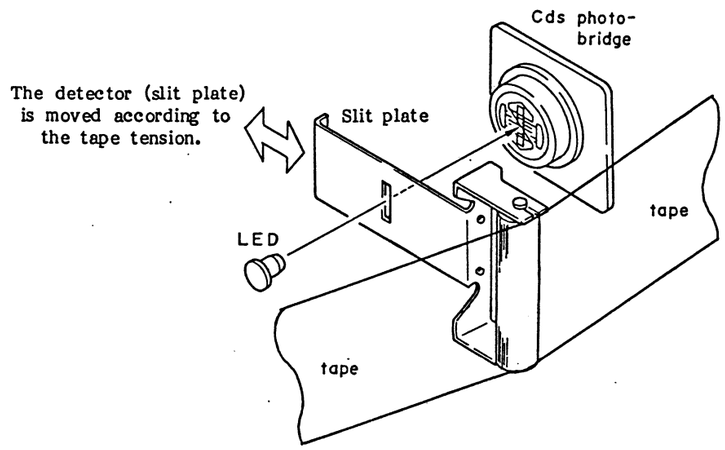

Fig. 5-10 Tape and Tape Tension Detector

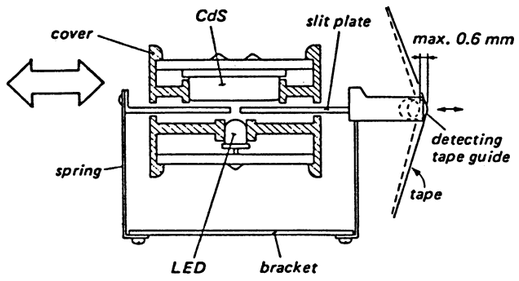

Fig. 5-11 Tape Tension Detector

A cds output signal appears at the center position (pin 2) of the two voltage dividers (cds-1 and cds-2). When the voltage appearing at pin 2 is 5.4 to 8.2V DC, the automatic zero offset adjustment circuit becomes 0V DC.

The tape tension moves the slit. The tension detector (slit plate) can be moved up to 0.6mm, representing a tape tension change of 0 to 300g. The cds output signal appearing at pin 2 is passed through amplifier IC505 on the RS-4 board, so the output voltage is 0 VDC when the tape tension is 0g at TP518. The output voltage is 0.5V when the tape tension is 100g and 1.5V (max.) when it is 300g.

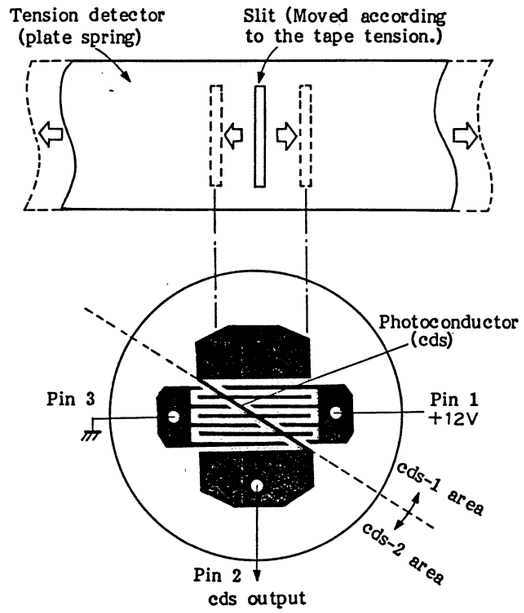

Fig. 5-12 cds Photobridge Pattern

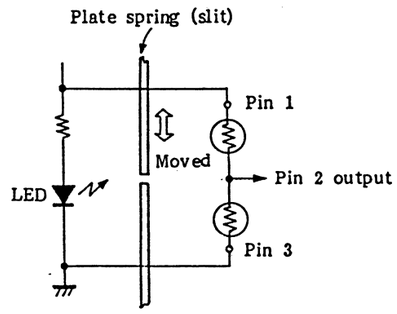

Fig. 5-13 Tape Tension Detector Configuration

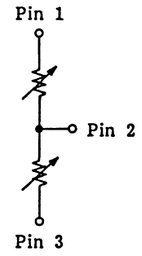

Fig. 5-14 Equivalent Circuit of cds Photobridge

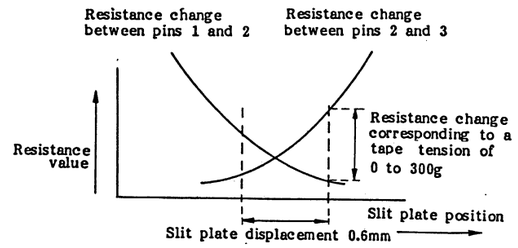

Fig. 5-15 Relationship between the Tape Tension (Slit Plate Position) and cds Output

5-2-3. Tension detector

As shown in Fig. 5-16, the main functions of the tension detector are to amplify the cds output signal, correct the cds output signal zero offset automatically, and send the corrected cds output signal to the next stage. Moreover, since too low detector output causes tape slacking, a tape slacking detector circuit is provided. Too high output of the detector causes excessive tape tension. Therefore, an excessive tension detector circuit is provided. Since the take-up side is identical to the supply side, only the take-up side is described here.

. cds signal input buffer: IC501-6

When the cassette is ejected, a signal of 5.4 to 8.2 VDC is fed from the cds element to the input buffer.

. cds signal head amplifier: IC501-6

The amplifier has two adjusting points. When the input signal is 5.4 to 8.2 VDC in the zero adjustment, TP517 can be adjusted to +4 VDC using RV501. Detector sensitivity is adjusted to 0.5V/100g at TP517 using RV502. Therefore, sensitivity at TP517 is +4V at 0g, 4.5V (4V + 0.5V) at 100g, and 5.25V (4V + 1.25V) at 250g. Sensitivity at TP503 of amplifier IC501-8 in the next stage is 1.0V/100g. The cds element output cannot be obtained using IC501-3 without a sensitivity of 0.278V/100g.

. cds zero offset drift detectors: IC502-6 (+20mV) and IC502-2 (-20mV)

The cds output signal is fed from TP503 to the next-stage circuit. When the zero offset adjustment has been completed, voltage at TP503 is 0 VDC. However, 0 VDC at TP503 changes with the passage of time. Reference voltages of +20mV (IC502-5) and -20mV (IC502-3) are provided to detect the voltage deviation. The cds output signal (at TP503) and the reference voltage are compared using an operational amplifier. When the cds output signal at TP503 is not in the range of 0 VDC ± 20mV, the gate circuit (IC509-12/11) is activated and a 1/2 vertical drive signal is sent to IC503/504-15 as a clock pulse. IC503 and IC504 form a 6-bit binary UP/DOWN counter. A 6-bit binary signal is obtained corresponding to the voltage deviation. The 6-bit binary signal is D/A-converted at all times and fed to operational amplifier IC501-9. The deviation is corrected by 14.4mV using the least significant bit (LSB), bit 1. The correction range of the most significant bit (MSB), bit 6 is +0.533 to -0.267V.

. cds zero offset correction circuit: IC501-8

A cds signal is sent to pin 10 of IC501 and a drift correction signal to pin 9. The output at pin 8 of IC501 is corrected to 0 VDC ± 20mV. Drift detector circuit and 6-bit digital operations are completed before the cassette is inserted into the VTR and the threading operation is initiated. However, since the 6-bit digital data is being memorized, the drift correction signal appearing at pin 9 of IC501 is input at all times for correction.

. Threading inhibit signal: output at IC509 pin 3

During cds zero drift correction, the output at pin 3 of IC509 is high. Therefore, threading is inhibited because the drift correction operation is performed when the tape is not touching the cds sensor.

. Tape slacking detector circuit: IC502-14 (See Fig. 5-19.)

Tape tension deterioration results in tape slacking. When the tape tension is less than 0.08V/8g at TP503, tape slacking occurs. IC502-12/13 compares the tension voltage with a reference voltage.

. Excessive tension detector circuit: IC502-8 (See Fig. 5-19.)

Excessive tension may damage the tape. When exessive tension is detected, an AUTO STOP function is activated to prevent the tape from being damaged. The excessive tension reference voltage in the REW mode differs from that in other modes. Reference voltage is selected using an analog switch (IC513-13). In the REW mode, a tension of 55g or more at the take-up side is considered excessive, in the other modes, a 287g or more is considered excessive.

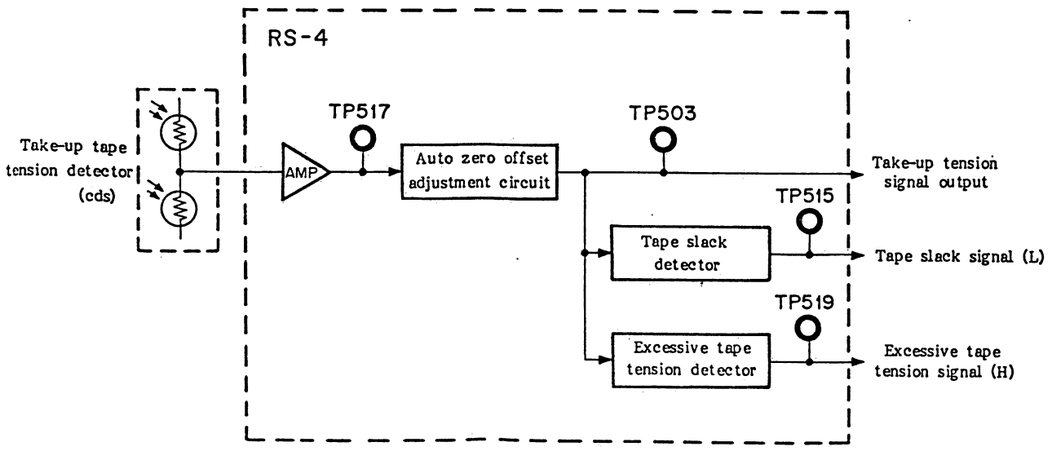

Fig. 5-16 Block Diagram of Take-up Tape Tension Detector Circuit

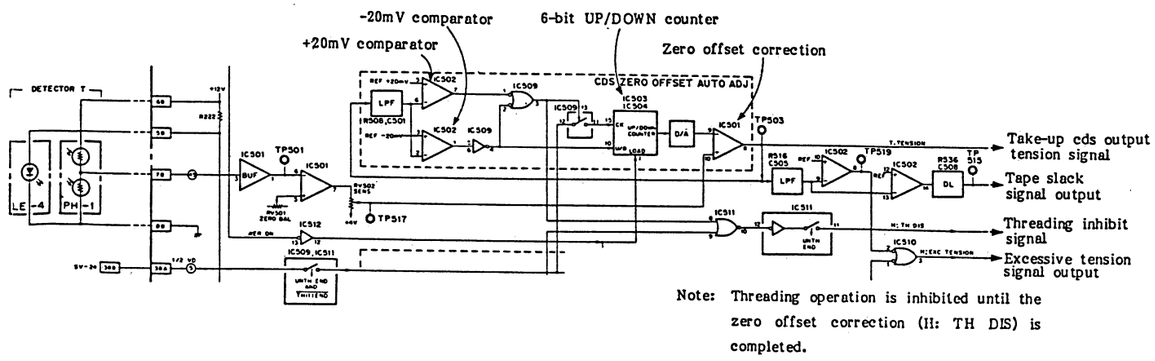

Fig. 5-17 Block Diagram of Take-up Tape Tension Detector Circuit

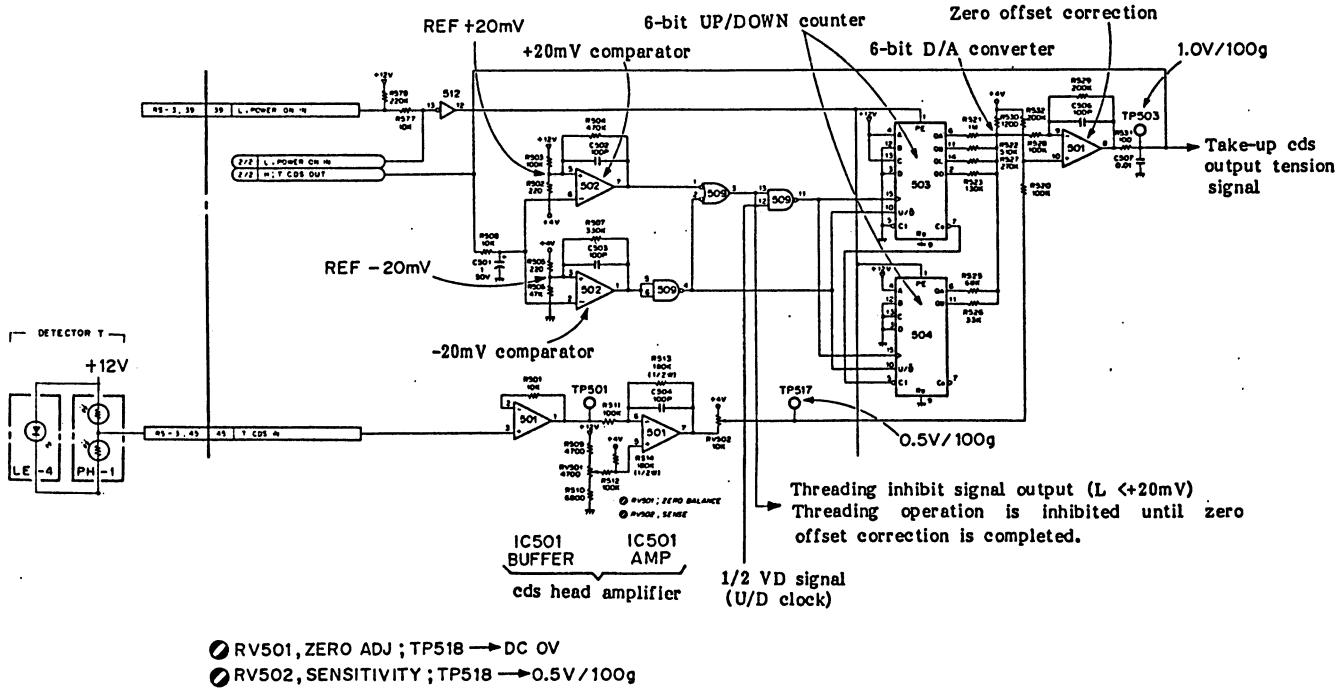

Fig. 5-18 Tape Tension Detector Circuit

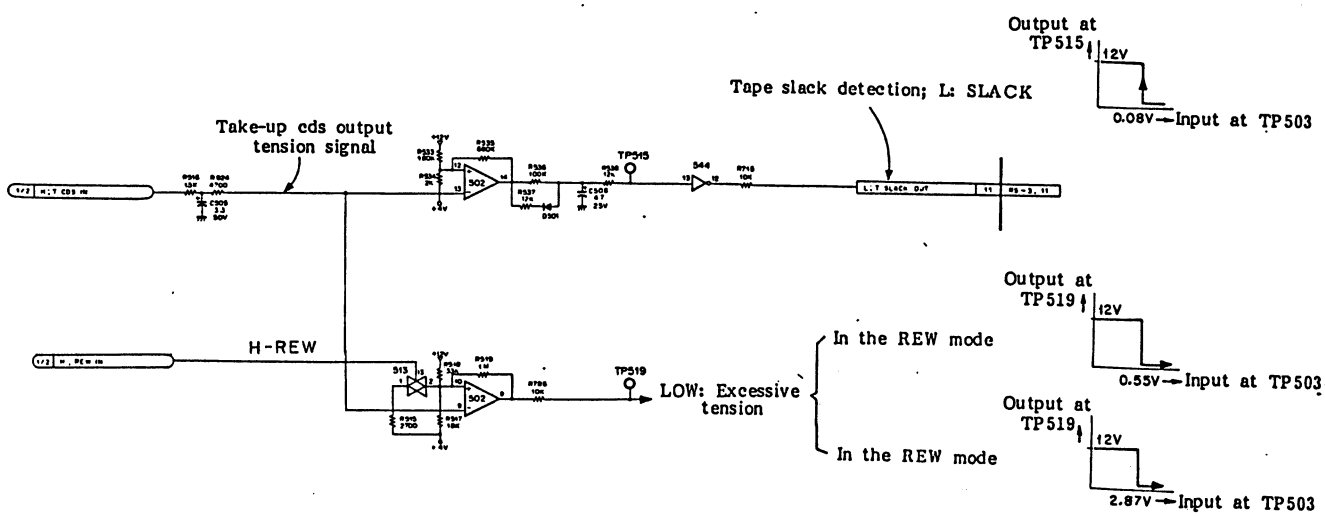

Fig. 5-19 Tape Slack Detector Circuit and Excessive Tension Detector Circuit

5-2-4. Tension target value circuit and comparator

As shown in Fig. 5-9, these circuits are provided with a tape tension target value generator which generates a DC voltage corresponding to the tape tension target value. This is described as a target voltage generator in Fig. 5-9.

Each instantaneous tape tension signal is supplied as a DC voltage using a cds detector. The difference between the tape tension signal voltage and target voltage is detected using an operational amplifier. The resultant voltage difference is amplified by a reel motor drive circuit in the next stage to control the motor torque.

- Block diagram and circuit description (See Figs. 5-20 and 5-21.)

Since this circuit on the take-up side is identical to that on the supply side, only the take-up side circuit is described here.

- Take-up tension signal analog switch

As shown in the block diagram in Fig. 5-20, the cds take-up tension signal output from TP503 is fed through analog switch IC524 to the comparator. The analog switch (IC524) is turned off in the SEARCH FWD, normal PB, SEARCH REV, STILL, STOP, and UNTHREADING modes.

- Target voltage generator

The optimum target voltage at the take-up and supply sides should be generated according to the VTR operation modes.

The target voltage corresponds to the tape tension target value. The target voltage at the take-up side can be measured at TP508, and that at the supply side at TP507.

	Target value / Mode	Target value at the take-up side (TP508)		Target value at the supply side (TP507)	
		Target value	Target voltage	Target value	Target voltage
(1)	SEARCH FORWARD	113g	1.13V	56g	0.56V
(2)	NORMAL FORWARD	113g	1.13V	Mechanical servo	—
(3)	SEARCH REVERSE	56g	0.56V	113g	1.13V
(4)	STILL/STOP	34g	0.34V	34g	0.34V
(5)	DT-ON STILL	34g	0.34V	56g	0.56V
(6)	UNTHREAD'G-2(A)	200g	1.96V	*	—
(7)	UNTHREAD'G-2(C)	*(note)	—	101g	1.01V
(8)	THREAD'G-2	*(note)	—	34g	0.34V

Table 5-5

(1) Target voltage (at take-up side) in the SEARCH FWD mode

Analog switch IC524-3/4/5 is turned on and 1.13 VDC appears at TP508 across R654 and R655.

(2) Target voltage (at the take-up sides) in the normal FWD mode (See Step 5-4.)

(3) Target voltage (at the take-up side) in the SEARCH REVERSE mode

Analog switch IC524-1/2/13 is turned on and the target voltage in the REVERSE mode is sent to TP508. The target voltage at the take-up side in the REVERSE mode is generated using R622 and R623. However, the tape speed in the REVERSE mode may be continuously changed in the range of 1/30 times normal speed in the reverse direction to 5 times normal speed in the forward direction. The accelerated or decelerated capstan causes momentary tape slacking. The capstan motor speed voltage from the SV board is therefore differentiated twice using C525 and C527, and a change in capstan rotation speed is extracted to temporarily correct the tape tension.

(4), (5) Target voltage (at the take-up side) in the STILL/STOP and DT-ON STILL modes

The 0.34 V obtained using resistance voltage dividers R653 and R655 is defined as the target voltage.

(6) Target voltage (at the take-up side) in the UNTHREADING-2 (C) mode

In the UNTHREADING-2 mode, voltage at pin 9 of IC518 goes low. As a result, a target voltage of 1.96V is generated across R585 and R539.

Note: In the UNTHREADING-2 (C) and THREADING-2 modes, the tape is supplied from the supply reel table. Therefore, mechanical braking is applied to the take-up reel table.

. Comparison of the target voltage with a cds tension signal: IC523-8/9/10

The target voltage and cds tension signal are compared using this operational amplifier which amplifies the resultant error output 7.5 times.

• Tension target voltage overshoot circuit: C539

There is a response delay in the reel servo system. As shown in Fig. 5-23, a transient overshoot is provided to improve the response delay. The positive overshoot is generated using C539. The negative undershoot is absorbed and not generated using C539.

• Error output phase delay and advance compensation (See Fig. 5-24.)

The error output is fed to the phase delay compensator circuit shown in Fig. 5-21 (see Fig. 5-24).

(1) When the VTR changes from the low tension mode to the high tension mode (the take-up reel side is put from the STILL or REVERSE mode to the FWD mode), the signal phase is delayed. Therefore, +12V is applied through analog switch IC525-10 to the GND of C543 for compensation.

(2) The error output is then fed to a phase lead compensator circuit. Since the frequency signal component is higher than the tape reel system resonance point, the tape reel system is delayed in phase and the phase is advanced using C544. Whether C544 is used with R674 or R675 depends on the operation modes. Consequently, the tape tension and resonance frequency vary depending on the operation modes.

(3) After the phase compensation is completed, the error output is fed to the reel motor drive circuit.

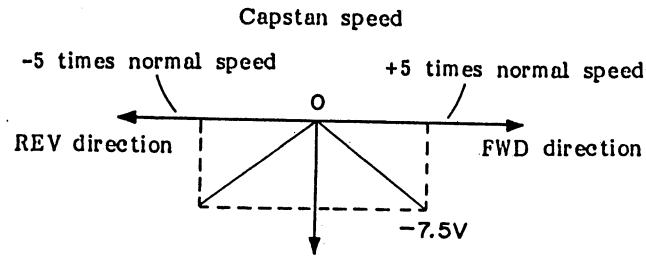

Fig. 5-22 Capstan Motor Speed Voltage

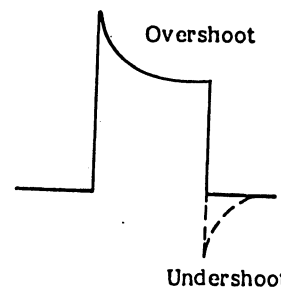

Fig. 5-23 Tension Target Voltage Overshoot (C539)

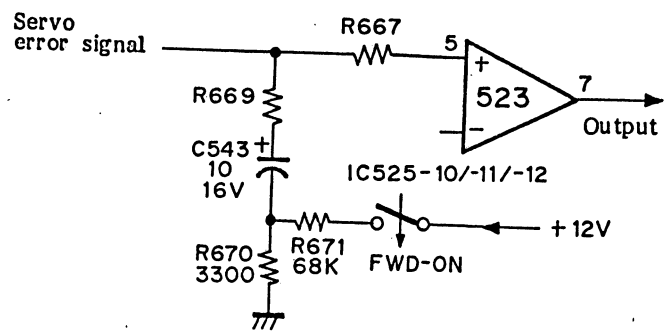

Fig. 5-24 Phase Delay Compensator Circuit

ue

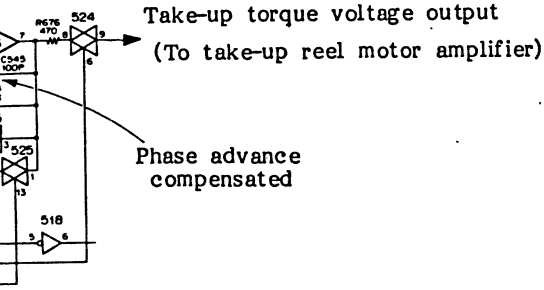

Take-up torque voltage output
(To take-up reel motor amplifier)

5-3-2. Detailed Block Diagram

(See Fig. 5-26.)

. Reel motor

The reel drive DC motor is shown on the right side of Fig. 5-26. The reel motors for the supply and take-up reels are mounted beneath the reel mounts of the mechanisms.

. Output stage of the reel motor drive amplifier

The output stage is composed of four transistors on the PD-19 board. The +15 and -18 VDC power supplies are used to operate the output stage as shown in Fig. 5-27. A terminal of the lead for the reel motor is connected to the GND (see Fig. 5-27).

The terminal of the other lead for the reel motor can be set positive or negative with respect to the common by using a switch. If that terminal is set positive, the motor revolves clockwise; if set negative, the motor revolves counterclockwise.

When the amplifier output voltage is negative, the reel motor revolves counterclockwise as shown in Fig. 5-27. When the take-up reel shown in Fig. 5-8 starts revolving counterclockwise with a negative DC voltage, the take-up reel rewinds the tape. The tape runs in the forward direction in the SEARCH/NORMAL PLAYBACK/FAST FORWARD modes.

When a negative voltage is fed to the supply reel, the supply reel revolves counterclockwise. The supply reel then rewinds the tape, and the tape runs in the REVERSE SEARCH/REWIND modes.

. Inverted amplifier: IC47-1/2

When the reel motor is driven by a voltage source (in the speed servo control) or current source (in the tension servo control), the positive-going servo error signal is amplified with IC47. The amplifier output which is inverted in polarity becomes negative.

Thus, a negative-going servo error signal is fed to the reel motor. The amplifier can issues either a positive-going or negative-going output signal to the reel motor. Supply voltages of +13.5 VDC and -18 VDC are fed to IC47. Supply voltages of +15 VDC and -18 VDC are fed to the output amplifier.

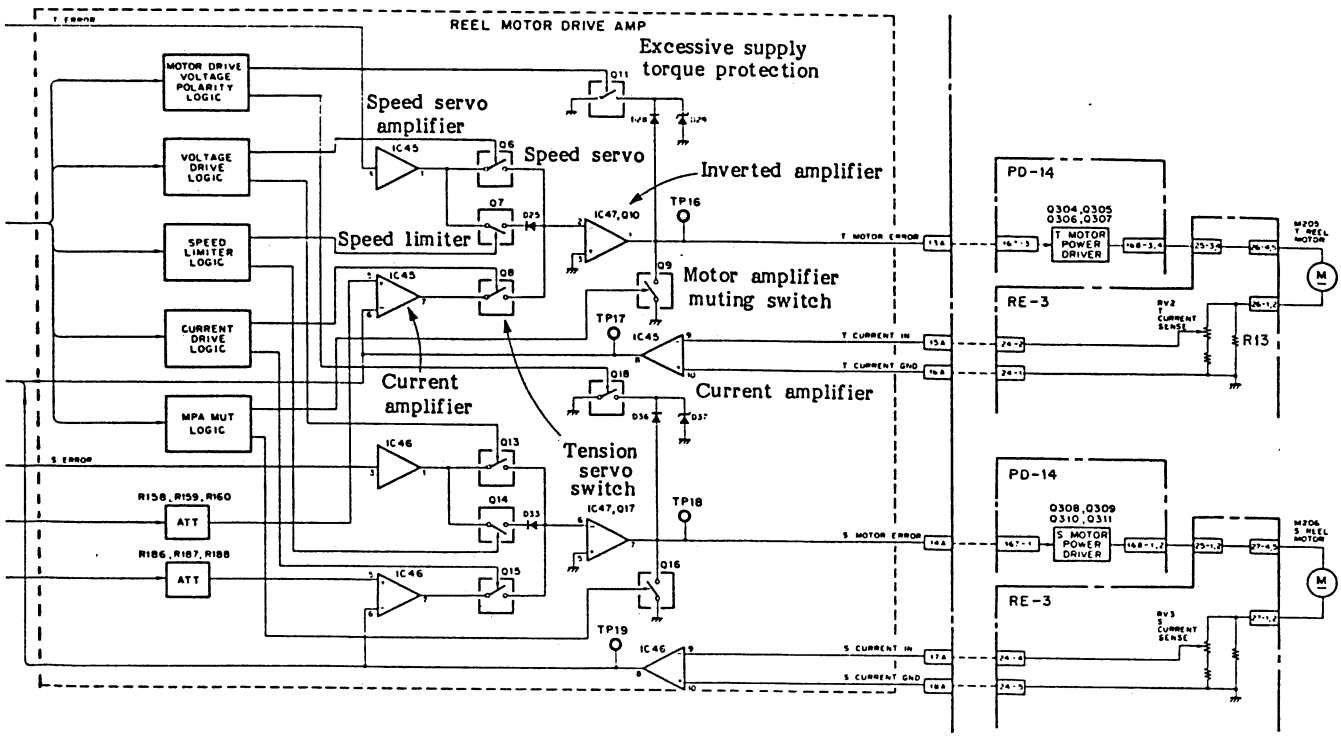

Fig. 5-26 Motor Drive Amplifier Block Diagram

IC45, then amplified with IC45. The output of IC45 appears at TP17. A torque of 1 kg.cm corresponds to 1.5Vp-p at TP17. The current sensed at TP17 is fed through pin 6 of IC45 to an operational amplifier which is fed back to keep the reel motor current constant. The output of operational amplifier IC45-6/5 is compared with the tape tension signal from the CdS sensor to keep the tape tension constant. The DC motor has a constant torque if the current is constant. The reel motor is controlled so that the motor torque as well as the tape tension is kept constant.

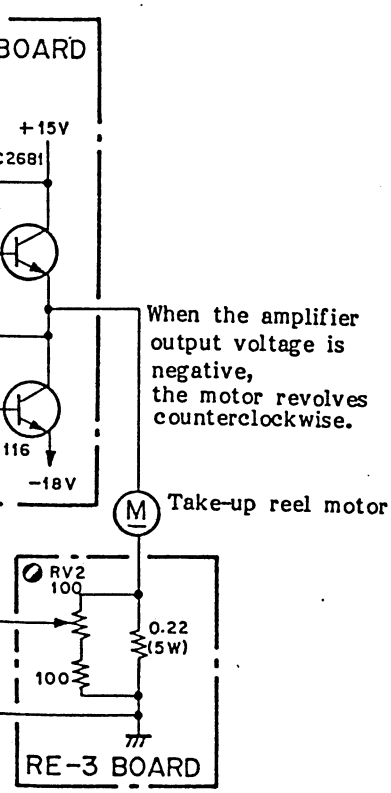

When the motor shaft torque is set at 500 g.cm., 121 mV should appear.

. Speed limiter: Q7

When the tension servo system is established, if the motor torque is kept constant, switch Q7 is turned on to limit the reel motor supply voltage.

If no tape is threaded, the tape tension signal from the CdS sensor cannot be input. Then, the motor revolves at maximum speed. If the AUTO STOP switch is set because the tape is loose, the tape tension signal is not fed from the CdS sensor even if the tape starts running when the reel motor starts to revolve. In this state, the motor can revolve at maximum speed.

When the motor reaches a high speed, a tension is applied to the tape and the tape is suddenly stretched. The tape may sometimes be cut or deformed, or the tape guide in the mechanism may be deformed or inclined. Q7 is used to protect the tape and tape guide. The motor speed is detected to feed it back to Q7, and Q7 suppresses the reel motor voltage in the tension servo control mechanism.

. Muting the motor drive amplifier: Q8

The motor drive amplifier is muted to make zero the motor drive voltage. The motor drive amplifier input terminal is grounded through transistor Q8.

. Maintaining the feed torque: Q11

If the supply tape reel table does not feed the tape smoothly in the FF/REW mode, the tape is fed when the unsatisfactory tape tension on the supply reel is detected as shown in Fig. 5-6 and when the tape is fed by the motor torque.

Q11 turns off in the REW mode, and the tape is fed forward by generating the torque. Q11 turns on in any mode except the REW mode, and the torque to feed the tape in the forward direction is not generated.

The voltage at TP16 is normally negative as shown in Fig. 5-27 and becomes positive when the torque to feed the tape in the forward direction is generated. Q11 turns on and the voltage appearing at TP16 is grounded through D28 to stop generation of the torque to feed the tape in the forward direction.

(b) Tension servo control loop IC45 and Q8
(Current drive mode)

If the tension servo loop is established, a feedback loop is established to drive the motor by a current source. The current flowing through the reel motor is sensed by the fixed resistor connected in series with the reel motor. The detected voltage is amplified with IC45-9/8. The amplifier output and the tape tension signal from the CdS sensor to pin 5 of IC45 are compared by using an operational amplifier. The difference is fed through switch Q8 back to pin 2 of IC47 to form a feedback loop.

RV2 is set so that the voltage across RV2 on the PD-19 board is 121 mV for the drive current equal to a torque of 480g.cm. The motor current at that time is approximately 800 mA. The voltage at TP17 is 0.75 VDC.

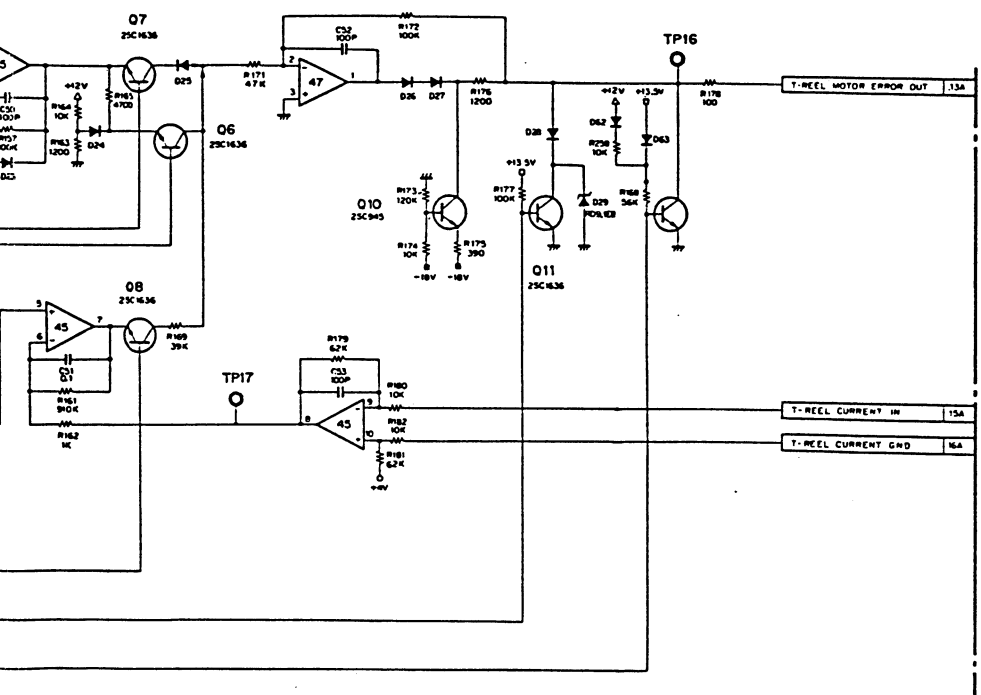

Amplifier Circuit Diagram

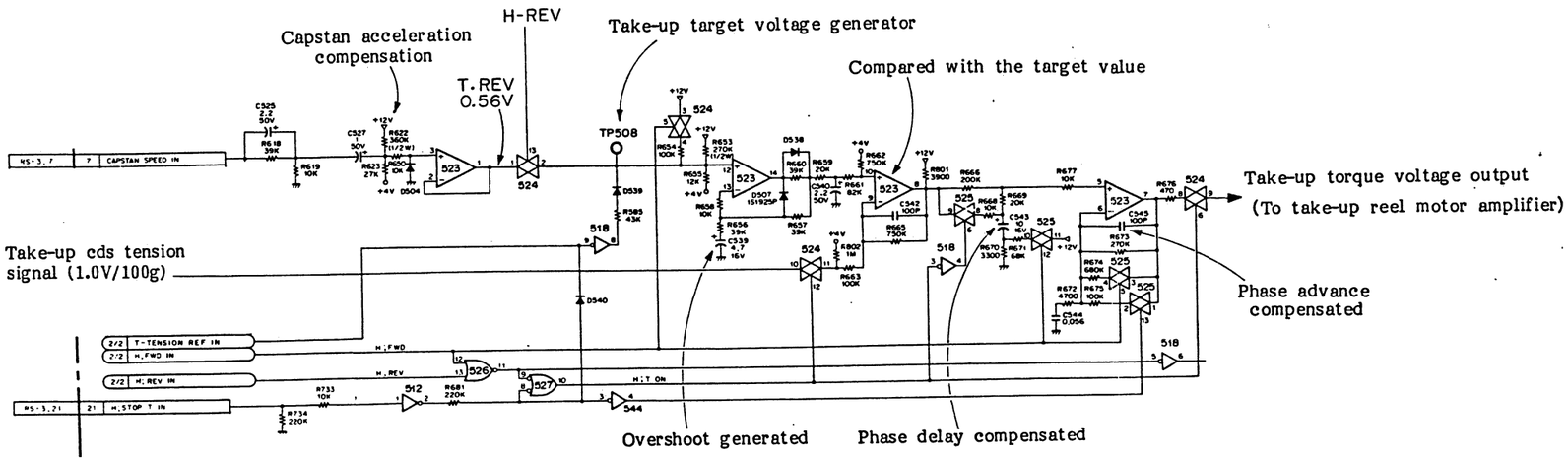

Fig. 5-20 Take-up Tension Servo, Target Value Generator, and Comparator Circuits

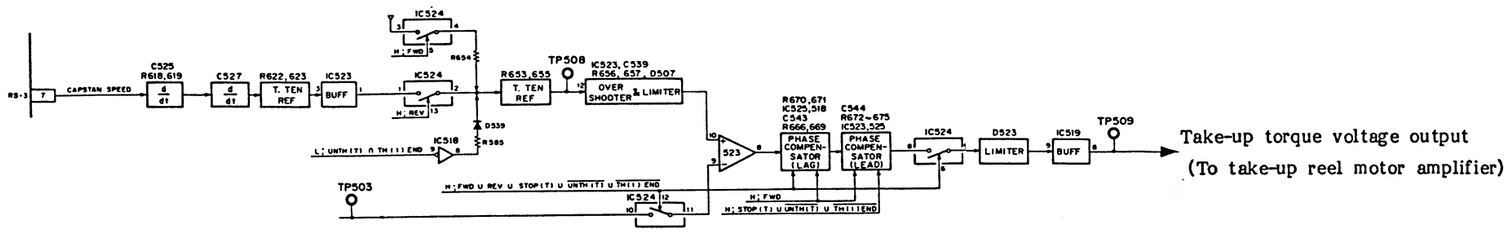

Fig. 5-21 Take-up Tension Servo, Target Value Generator, and Comparator Circuits

5-3. REEL MOTOR DRIVE CIRCUIT

5-3-1. Block Diagram

(See Fig. 5-25.)

The reel motor drive circuit consists of a speed servo control amplifier and a tension servo control amplifier. These amplifiers are provided for both the supply and take-up motors as shown in Fig. 5-25.

The speed and tension servo control amplifiers for the supply and take-up motors have the same configuration. Only the take-up motor will be described.

. Speed servo control amplifier

The necessary table revolution signal is sent from the reel FG, and the motor drive voltage is generated so that the correct speed can be obtained.

The speed servo control circuit is mainly used in the FF/REW mode while the voltage drive switch is turned on.

. Tension servo control amplifier

The tape tension signal is sent from the CdS tension sensor. The motor drive current is supplied so that the specified tape tension can stably be obtained. The tension servo amplifier has a feedback loop and drives the motor at a constant current. The tension servo control circuit is mainly used in the PLAY/SEARCH mode while the current drive switch is turned on.

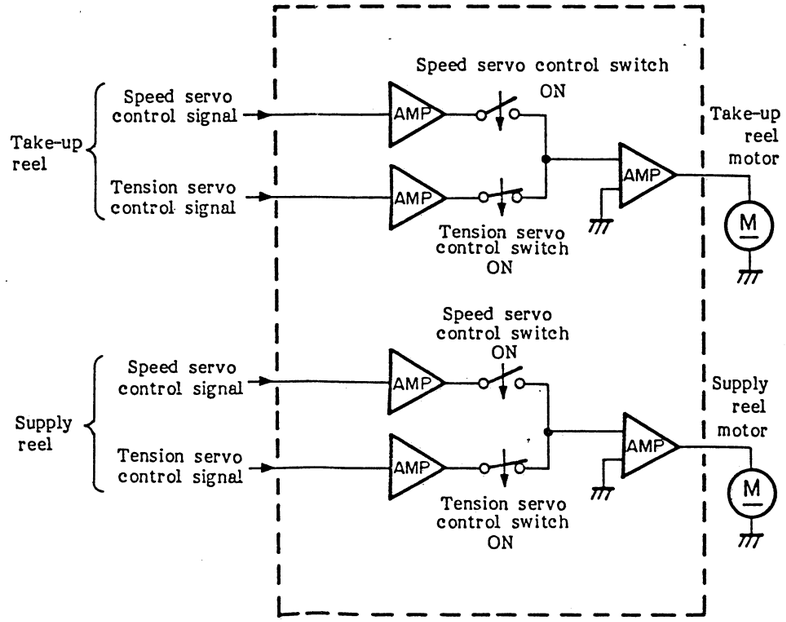

Fig. 5-25 Motor Drive Amplifier Block Diagram

5-3-2. Detailed Block Diagram

(See Fig. 5-26.)

. Reel motor

The reel drive DC motor is shown on the right side of Fig. 5-26. The reel motors for the supply and take-up reels are mounted beneath the reel mounts of the mechanisms.

. Output stage of the reel motor drive amplifier

The output stage is composed of four transistors on the PD-19 board. The +15 and -18 VDC power supplies are used to operate the output stage as shown in Fig. 5-27. A terminal of the lead for the reel motor is connected to the GND (see Fig. 5-27).

The terminal of the other lead for the reel motor can be set positive or negative with respect to the common by using a switch. If that terminal is set positive, the motor revolves clockwise; if set negative, the motor revolves counterclockwise.

When the amplifier output voltage is negative, the reel motor revolves counterclockwise as shown in Fig. 5-27. When the take-up reel shown in Fig. 5-8 starts revolving counterclockwise with a negative DC voltage, the take-up reel rewinds the tape. The tape runs in the forward direction in the SEARCH/NORMAL PLAYBACK/FAST FORWARD modes.

When a negative voltage is fed to the supply reel, the supply reel revolves counterclockwise. The supply reel then rewinds the tape, and the tape runs in the REVERSE SEARCH/REWIND modes.

. Inverted amplifier: IC47-1/2

When the reel motor is driven by a voltage source (in the speed servo control) or current source (in the tension servo control), the positive-going servo error signal is amplified with IC47. The amplifier output which is inverted in polarity becomes negative.

Thus, a negative-going servo error signal is fed to the reel motor. The amplifier can issues either a positive-going or negative-going output signal to the reel motor. Supply voltages of +13.5 VDC and -18 VDC are fed to IC47. Supply voltages of +15 VDC and -18 VDC are fed to the output amplifier.

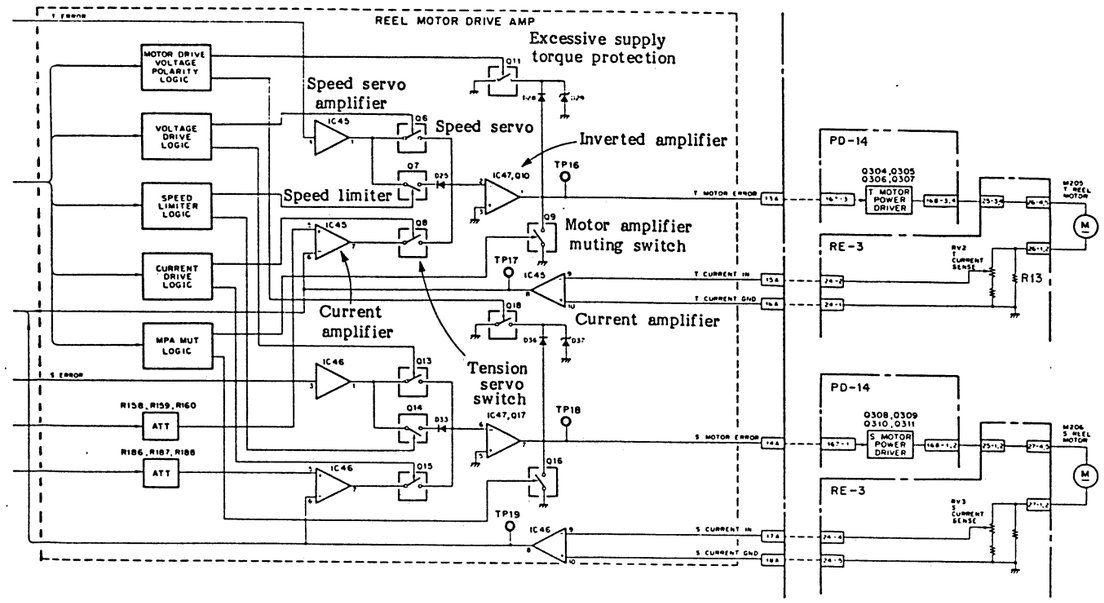

Fig. 5-26 Motor Drive Amplifier Block Diagram

. Speed servo system: IC45/Q6 operating in the FF mode

The take-up reel servo error signal is fed to pin 3 of IC45 in the take-up reel system. IC45-3/1 is a speed servo amplifier whose output is fed through switch Q6 to the reel motor. Switch Q6 is used to select either the speed servo or the tension servo. When only the speed servo control circuit is used, the take-up servo control circuit can operate in the speed servo control mode with Q6 turned on. When the tape runs in the FF mode, Q6 turns on. The take-up reel servo control circuit operating in the speed servo control mode controls the voltage fed to the reel motor only when the tape runs in the FF mode.

When the tape runs in the REWIND mode, the supply reel servo control amplifier operates in the servo control speed mode. The FF or REW mode signal can be sensed by a function gate. When the tape runs in the FF mode, switches Q7 and Q8 in the take-up reel control circuit are turned off.

. Tension servo control system: Q8

The take-up reel servo control system constitutes a tension servo control loop in any mode other than the speed servo control mode (the tension servo control system is selected in the STOP, SEARCH or NORMAL FORWARD mode). In this state, the function gate output turns on switch Q8.

The tension servo error signal is fed to pin 5 of IC45, as shown in Fig. 5-26, and amplified with IC45. The amplifier output is fed through switch Q8 to inverter IC47. The inverter output appearing at TP16 is fed to the take-up reel motor.

The reel motor is driven by a current source in the tension servo control mode so that a constant torque is applied to the reel motor. The current flowing through the take-up reel motor can be sensed by the voltage appearing across fixed resistor RV13 connected in series with the take-up reel motor. The signal voltage across resistor RV2 is fed to pin 9 of IC45 with respect to pin 8 of IC45, then amplified with IC45. The output of IC45 appears at TP17. A torque of 1 kg.cm corresponds to 1.5Vp-p at TP17. The current sensed at TP17 is fed through pin 6 of IC45 to an operational amplifier which is fed back to keep the reel motor current constant. The output of operational amplifier IC45-6/5 is compared with the tape tension signal from the CdS sensor to keep the tape tension constant. The DC motor has a constant torque if the current is constant. The reel motor is controlled so that the motor torque as well as the tape tension is kept constant.

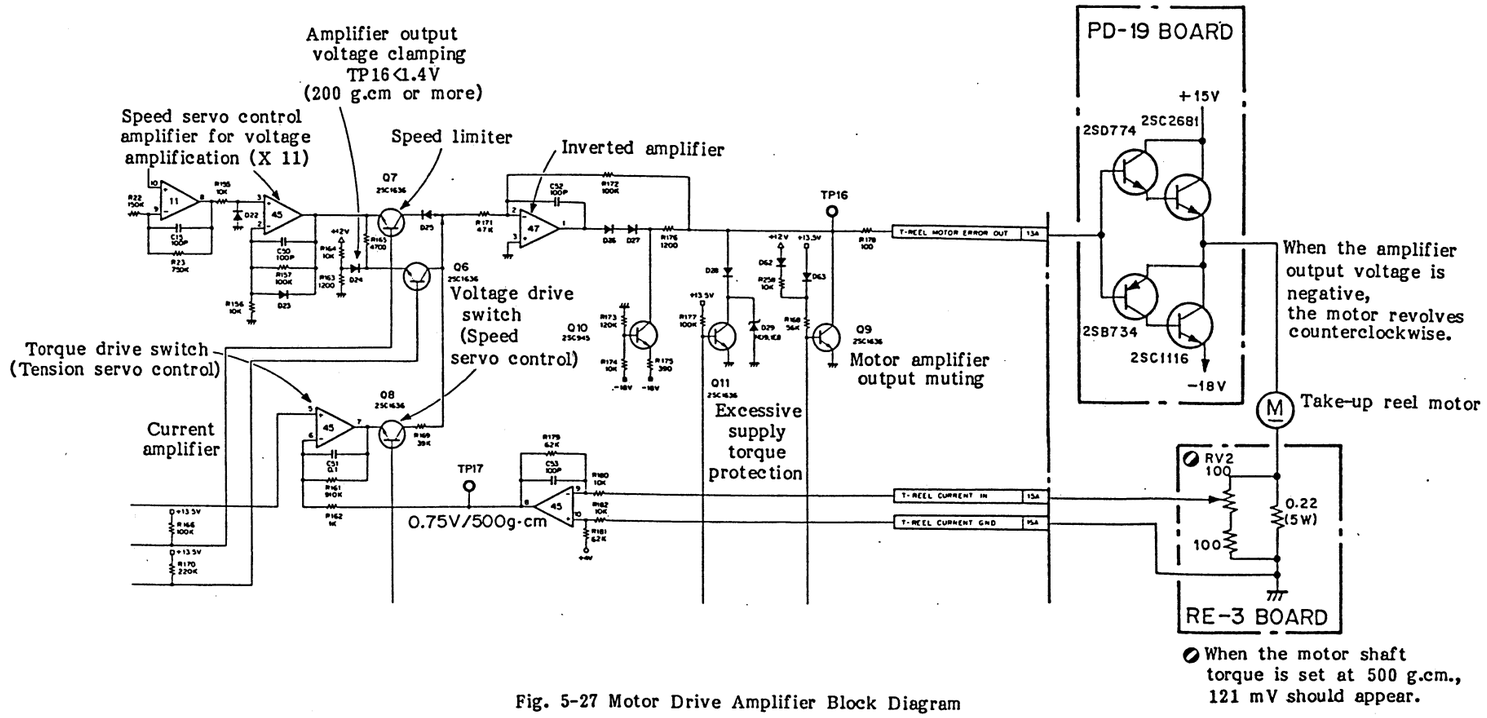

Fig. 5-27 Motor Drive Amplifier Block Diagram

. Speed limiter: Q7

When the tension servo system is established, if the motor torque is kept constant, switch Q7 is turned on to limit the reel motor supply voltage.

If no tape is threaded, the tape tension signal from the CdS sensor cannot be input. Then, the motor revolves at maximum speed. If the AUTO STOP switch is set because the tape is loose, the tape tension signal is not fed from the CdS sensor even if the tape starts running when the reel motor starts to revolve. In this state, the motor can revolve at maximum speed.

When the motor reaches a high speed, a tension is applied to the tape and the tape is suddenly stretched. The tape may sometimes be cut or deformed, or the tape guide in the mechanism may be deformed or inclined. Q7 is used to protect the tape and tape guide. The motor speed is detected to feed it back to Q7, and Q7 suppresses the reel motor voltage in the tension servo control mechanism.

. Muting the motor drive amplifier: Q8

The motor drive amplifier is muted to make zero the motor drive voltage. The motor drive amplifier input terminal is grounded through transistor Q8.

. Maintaining the feed torque: Q11

If the supply tape reel table does not feed the tape smoothly in the FF/REW mode, the tape is fed when the unsatisfactory tape tension on the supply reel is detected as shown in Fig. 5-6 and when the tape is fed by the motor torque.

Q11 turns off in the REW mode, and the tape is fed forward by generating the torque. Q11 turns on in any mode except the REW mode, and the torque to feed the tape in the forward direction is not generated.

The voltage at TP16 is normally negative as shown in Fig. 5-27 and becomes positive when the torque to feed the tape in the forward direction is generated. Q11 turns on and the voltage appearing at TP16 is grounded through D28 to stop generation of the torque to feed the tape in the forward direction.

5-3-3. Circuit Descriptions

See Figs. 5-27 and 5-28.

(a) Motor drive power amplifier on the PD-19 board

The motor drive power amplifier is mounted on the PD-19 board as shown in Fig. 5-27. The amplifier consisting of four transistors is fed from +15 VDC and -18 VDC power supplies. The motor can revolve clockwise and counterclockwise. The motor revolves counterclockwise to take up the tape for a negative output voltage, and clockwise to supply the tape for a positive output voltage. In the FF/REW mode, the tape goes in either the forward or reverse direction depending on the output voltage polarity of the motor power drive amplifier.

The reel motor is a DC type, and the torque is proportional to the drive current. For a motor current of 800 mA, a torque of approx. 500g.cm is generated.

(b) Tension servo control loop IC45 and Q8

(Current drive mode)

If the tension servo loop is established, a feedback loop is established to drive the motor by a current source. The current flowing through the reel motor is sensed by the fixed resistor connected in series with the reel motor. The detected voltage is amplified with IC45-9/8. The amplifier output and the tape tension signal from the CdS sensor to pin 5 of IC45 are compared by using an operational amplifier. The difference is fed through switch Q8 back to pin 2 of IC47 to form a feedback loop.

RV2 is set so that the voltage across RV2 on the PD-19 board is 121 mV for the drive current equal to a torque of 480g.cm. The motor current at that time is approximately 800 mA. The voltage at TP17 is 0.75 VDC.

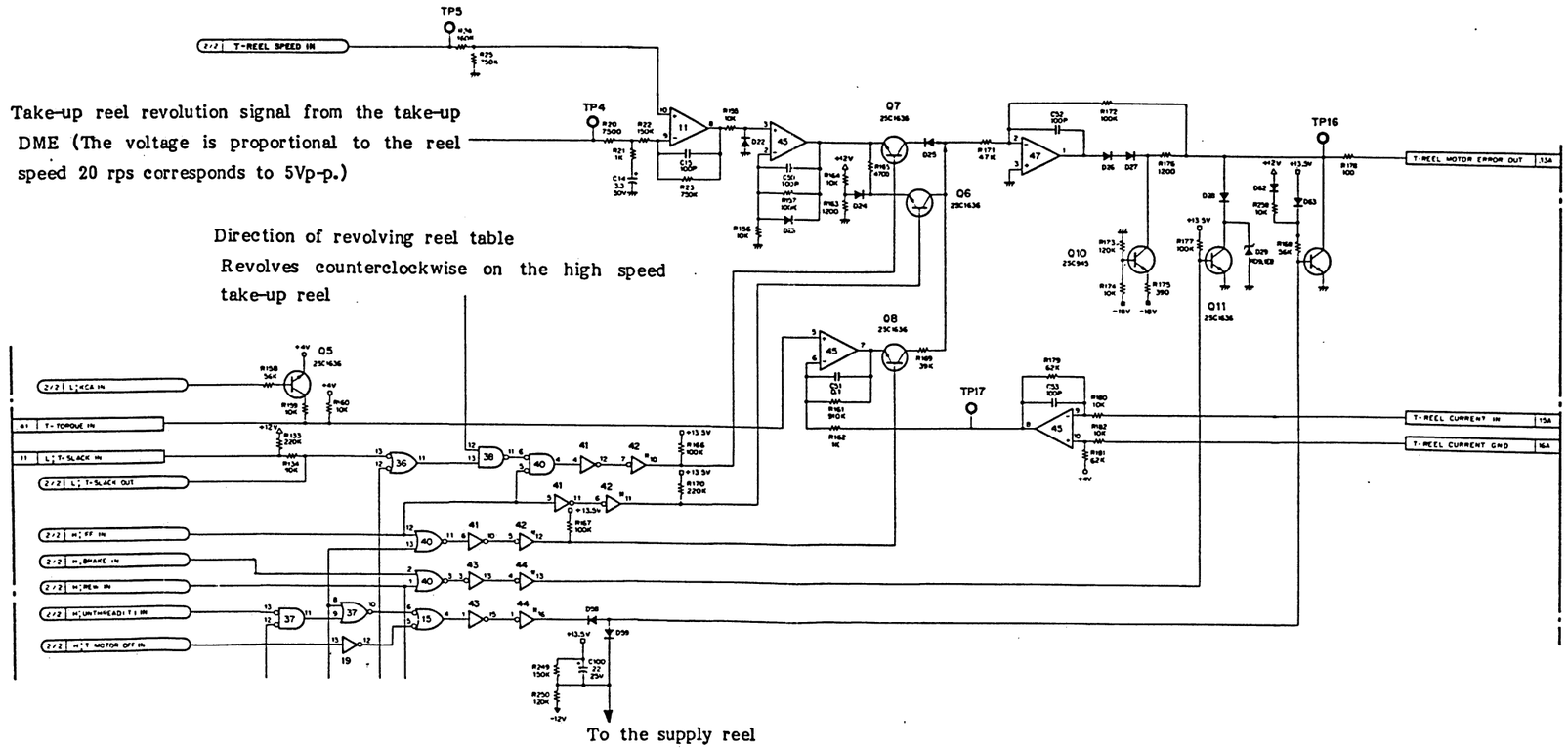

Fig. 5-28 Motor Drive Amplifier Circuit Diagram

(c) Speed limiter when the tension servo control system is operated: Q7

When the tension servo control system is operated, Q7 is turned on by SLACK to limit motor revolution. Operational amplifier IC11-9/10 compares the take-up reel mount speed with the reference voltage.

In the SEARCH/FWD mode, pins 10 and 11 of IC22 and pins 1 and 2 of IC22 are strapped to feed the reference voltage determined by using a voltage divider consisting of R100 and R101 to pin 10 of IC11 through TP5. As the reel mount speed increases, the voltage at TP4 increases and the voltage at pin 1 of IC45 decreases. This voltage is fed to pin 2 of IC47 through Q7 and D25.

The voltages at pin 1 of IC47 and TP16 increase, and the motor revolution decreases. In the SEARCH/FWD mode, the tension servo control mechanism turns on Q7.

In the SEARCH/FED mode, the motor revolution is limited by the above procedure. The take-up reel revolves at five times the normal speed (max.) in the SEARCH mode. When the reel is empty, the reel mount revolves at the highest speed. When the reel is full of tape, the reel mount revolves at the lowest speed.

When the take-up reel is empty, the reel table revolves at four times the reel speed when the reel is full of tape. The former is limited to six times the latter.

When the tension servo control system is operated, pins 10 and 11 of IC22 in the limiter are strapped. In the FWD mode, pins 1 and 2 of IC22 are strapped to determine the reference voltage at TP5 by using a voltage divider consisting of R100 and R101.

The take-up reel revolves clockwise in the REV mode. The take-up reel revolves counterclockwise while the loose tape is being tightened. The reel revolves at low speed of up to one rps (revolution per second). The voltage at TP5 is 1 VDC for 4 rps, and 1.5 VDC for 6 rps. One rps corresponds to 0.25V. In the REV mode, pins 10 and 11 of IC22 are strapped and the reference voltage at TP5 is determined by a voltage divider consisting of R100 and R102.

(d) Speed servo control loop: IC45-1/3 and Q6

(Voltage drive mode)

The speed servo control signal is sent in the FF mode of operation, and Q6 turns on to drive the reel motor.

5-4. Normal FWD Mode

The normal forward mode includes the record and normal playback modes. The take-up reel torque measures 110 g.cm as listed in Table 5-5 when the machine is operating in one of these two modes. The specified voltage is generated by using the generator shown in Fig. 5-21.

The mechanical servo control system conventionally used in VTRs causes less tension ripple than the electrical reel servo control system if the ripple is detected in the supply reel. Thus, the mechanical servo control system is used. When signals are recorded on tape and played back from the tape, the tape tension is controlled by the mechanical servo control system.

5-5. FF Mode and REW Mode

- Tension servo control and speed servo control -

	Take-up reel table	Supply reel table
FAST FORWARD	Speed servo loop	Tension servo loop
REWIND	Tension servo loop	Speed servo loop

(i) Objectives

The objectives of operating the reel servo control system in the FF and REW modes are:

1. To cut the take-up time (to cut the access time)
2. To accelerate the reel motor without any effect on the tape tension

   To smooth the acceleration of the reel when the machine enters the FF/REW mode
3. To keep the reel speed at the end of tape unchanged

   With a stop distance of 15 cm or less to the supply reel
4. To stably run the tape in the x10 SEARCH mode

(ii) Factors determining the take-up reel speed

The take-up reel speed is determined by the following three factors.

1. The motor load changes as the radius of tape wound in the reel changes.

   The KCA-60 has a minimum radius of 1.9 cm and a maximum radius of 5.86 cm.
2. The tape tension values vary depending on the frictional coefficient in the tape transport mechanism. The tape tension at the inlet of the cassette when the tape is wound on a reel ranges from 50g to 250g. The tape tension change causes a change in the load.
3. Frictions in a U-matic cassette transport may change. The U-matic cassette provides a bottom flange to the supply reel and so a bottom flange to the take-up reel. Eliminating the flange from the cassette reduces the dimensions of the cassette, but it may cause mulfunction of the tape on the reel. This mulfunction may cause the tape to contact the cassette case or flange to the supply reel and may heavily load the motor. The load ranges from 0g to 500g.

The total torque change may range from 100 g.cm to 2,000 g.cm. The load change is too large for the DC reel drive motor to change the torque according to the program execution, and thus the tape speed cannot be kept constant.

Fig. 5-29 shows the schematic diagram of the servo control system for driving the take-up reel when the system is operating in the FF mode.

(iii) Take-up reel speed in the FF mode

The drive voltage to the take-up reel motor is divided into three groups, as shown in Fig. 5-29. The outmost or 10x speed loop established by the CTL signal can be used in the x10 SEARCH mode, but not in the FF mode.

The drive voltage for the take-up reel motor can be determined by the intermediate outer loop and the innermost inner loop.

. Outer loop

The motor speed reference (Vref) is fed to the noninverting input terminal of the operational amplifier, and the supply reel mount speed which is obtained by the FG signal as shown in Fig. 5-30 is fed to the inverting input terminal of the operational amplifier to supply their difference to the outer loop.

Speed sensing:

A magnet ring with 48 paired poles is installed in the reel mount as shown in Fig. 5-30. As the reel mount revolves, the ring revolves. The divided magneto-resistive elements which are located adjacent to the reel mount detect the change in magnetic flux due to revolution of the magnet ring.

The frequency generator outputs a sine-wave voltage of 50mV to 100mV at a rate of 96 cycles per reel table revolution. The frequency is proportional to the reel mount speed.

The DME output is converted from frequency to voltage signals. The converted DC voltage signal representing the reel mount speed is fed to the operational amplifier.

Reel table speed reference Vref in the FF mode:

The reference voltage Vref is a DC voltage as shown in Fig. 5-29. The reel table speed reference is different for the KCA and KCS cassettes. The reel table speed references for the KCA and KCS cassettes are as follows:

When the KCA cassette is used, the reel table speed is changed during operation in the FF mode. The reference at the beginning of the operation in the FF mode is 7 rps, and that at the end of the operation in the FF mode is 10 rps. When the ratio of take-up reel table to the supply reel table is 1.2, the speed is changed.

The frequency-to-voltage demodulator sensitivity is 1/4 V/rps when the reel speed is represented in rps and its reference in VDC.

	FF mode (Supply reel reference)	REW mode (Take-up reel reference
KCA	7rps/10rps (<4min.)	14rps (2min. 30sec.)
KCS	7rps	10rps

	FF mode (Supply reel reference)	REW mode (Take-up reel reference
KCA	1.75V (7rps)/2.5V (10rps)	3.5V (14rps). DC
KCS	1.75V (7rps)	2.5V (10rps). DC

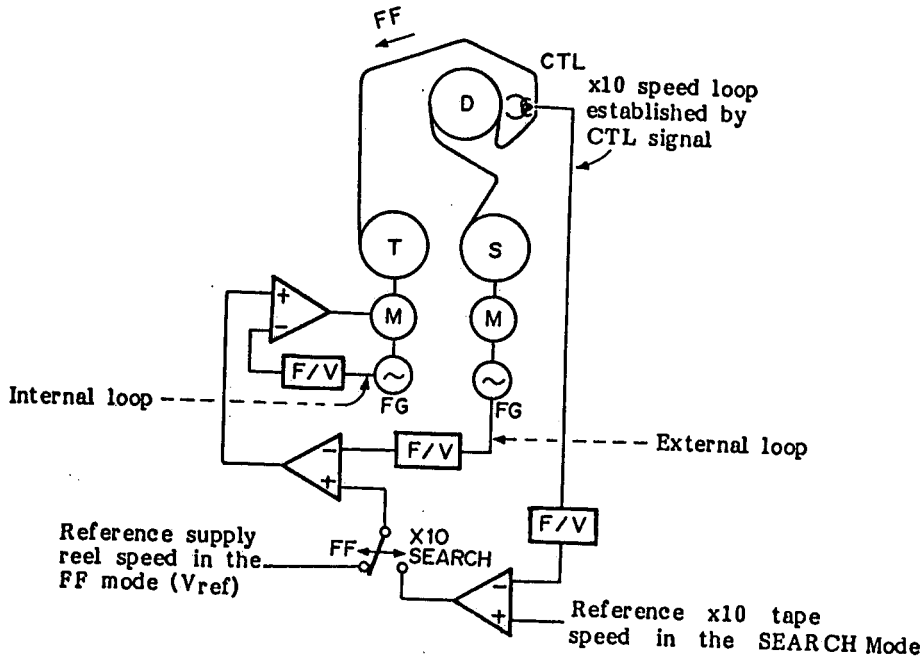

Fig. 5-30 Reel Table Revolution Sensor Constructed with the Magnet Ring and DMEs

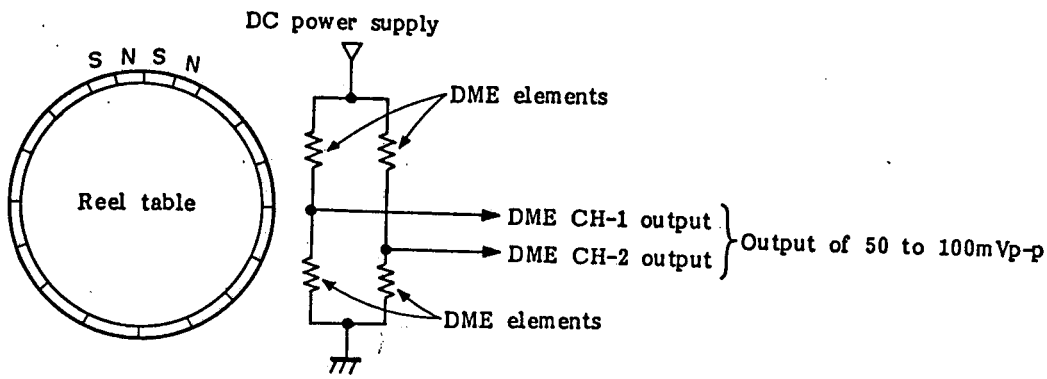

The magnet ring on the circumference of the reel consists of 48 paired poles.
For each channel, 90 cycles per revolution can be obtained in the waveform signal.

The divided magneto-resistive elements (DMEs) are mounted adjacent to the reel table on the EM-1 board. Outputs in channels 1 and 2 are 90 degrees apart.

Note: DME is abbreviation for Divided Magneto-resistive Element.

Fig. 5-29 Schematic Diagram of the Type Speed Servo Control Loop in the FF Mode (The take-up system becomes the supply system and vice versa in the REWIND

Outer loop operation:

The supply reel table speed and its reference are compared with an operational amplifier in the outer loop. The supply reel table can revolve at a constant speed independently of the radius of the tape wound on the supply reel table.

For example, when the supply reel tape radius is decreased to 1.9 cm as the operation in the FF mode continues, the supply reel speed is held at 10 rps. Thus, the tape length running per second at the end of the tape is not so great and the tape speed can be controlled.

Note: Why does the tape run faster in the REW mode?

The distances from the mechanisms to the end sensors for the supply and take-up reels are different. The distance from the end-of-tape sensor to the drum at the end of the tape is short if the machine is operating in the FF mode.

The tape should be stopped before the leader reaches the drum if the leader is detected by the end-of-tape sensor. Thus, the reel speed should be 10 rps or less. The distance from the beginning-of-tape sensor to the drum is long if the machine is operating in the REW mode. Thus, the braking distance is kept long and the reel speed can be as high as 14 rps.

Inner loop operation:

The take-up reel table speed is detected and compared with the reference. The difference signal is fed to the take-up reel motor.

The load to the take-up reel table changes and the tape cannot easily be wound on the reel with stability. Thus, a change in the load is sensed by the take-up reel table speed change and the voltage supplied to the motor is controlled to stabilize the operation.

The change in the take-up reel load can be eliminated by the inner loop so the tape can be wound stably.

iv) Determining the supply speed in the FF mode

The tape tension is continuously sensed and the supply motor is driven by a constant torque source to keep the tape tension stable as shown in Fig. 5-31. Thus, the tape can be fed stably from the supply system. In the supply reel servo system operating in the FF mode, the inner and outer loops are established.

In the inner loop, the tension of the tape wound on the supply reel is detected and set at 23 g where the tape exits the cassette. If the tension is 23 g, the tape contacts the drum and the picture frame is reproduced. The inner loop is used to compensate for changes in the radius of the tape wound on the reel and also compensate for changes in the tape tension due to losses in torque within the cassette.

The outer loop is established to keep the tape tension in the take-up system (at the inlet of the tape to the cassette) at 360 g.

Friction between the tape guide and tape in the tape running system may change. This may change the tape tension. The supply reel motor servo control system is used to keep the tape tension constant in the take-up system. The supply reel motor and tape in the system are controlled by the tape tension in the take-up system.

In the REW mode, operations are performed in the reverse process.

The tape runs in the FF mode while an even tension is applied to the tape as described above.

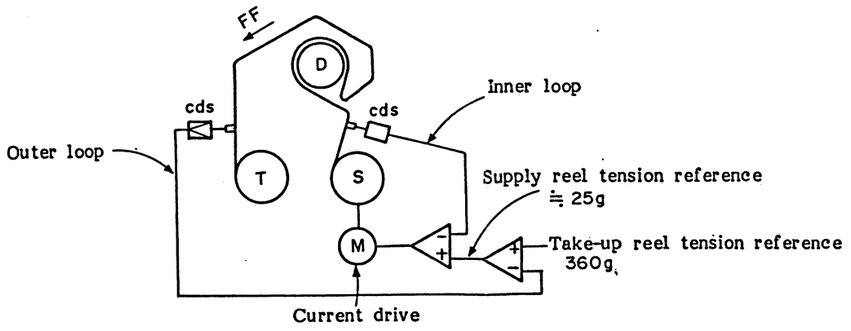

Fig. 5-31 Schematic Diagram of the Tape Tension Servo Control System in the FF Mode (The take-up system is changed with the supply system in the REW mode of operation.)

SP537 / Druck 207

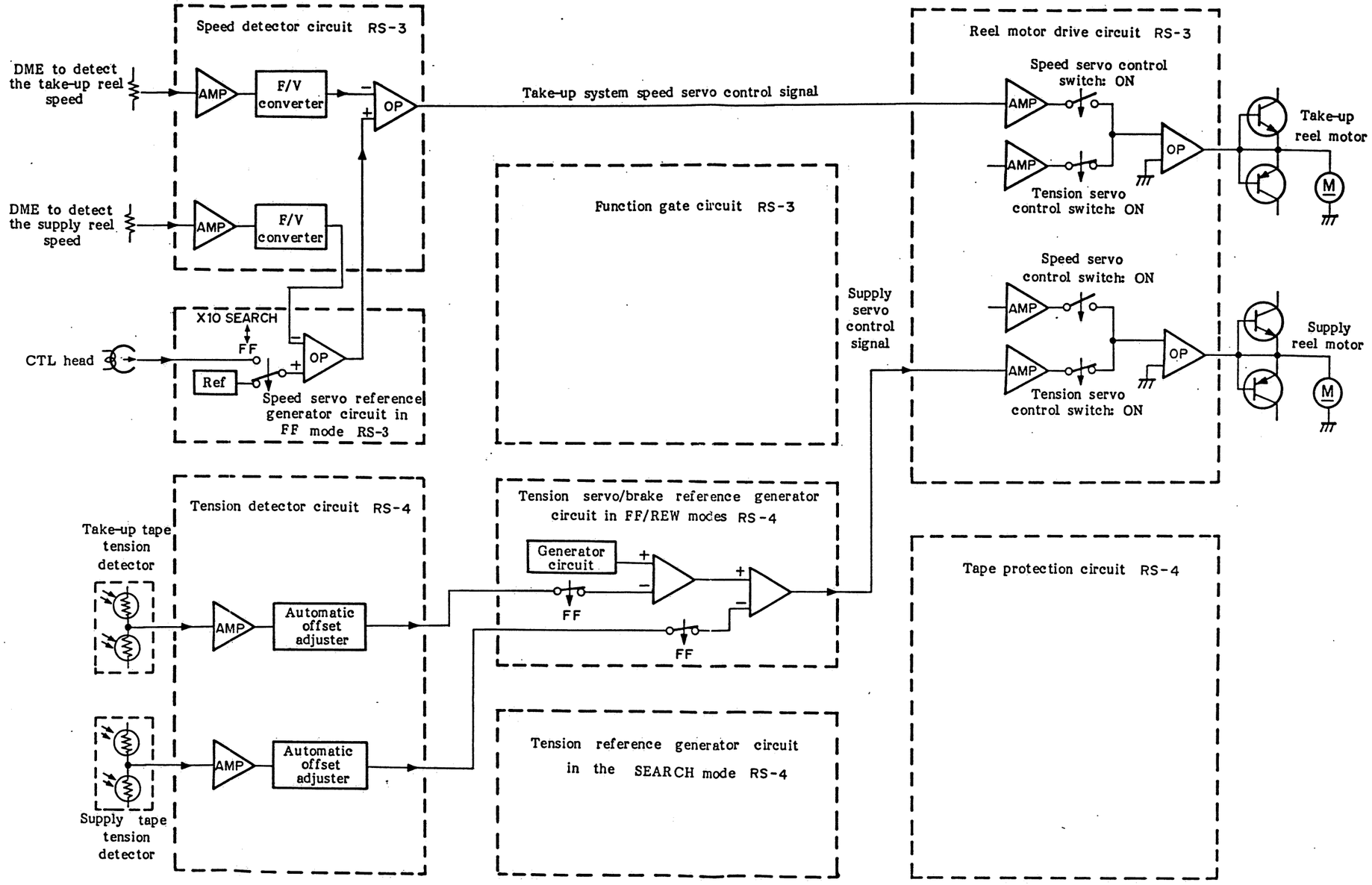

Fig. 5-32 Block Diagram of the Reel Servo Control System in the FF mode

(v) Circuit diagram and description of the speed detector circuit

The DME FG signal generated from the EM-1 board is fed to the take-up or supply reel speed servo control circuit. The input signal is compared with the reference signal in comparator IC11 of the reel speed servo control circuit. The error signal from comparator IC11 is fed to the reel motor to drive it by a constant voltage source. There are two channels in each DME. The FG signals phase angles are shifted by 90 degrees. The right-hand channel is used to demodulate the reel speed signal, detect the direction on reel motion, and detect the reel speed. The reel speed is detected by sensing whether the FG signal frequency is higher than the reference frequency. The FG signal is fed through the monostable multivibrator to the low-pass filter consisting of two stage filter elements. The filter output appears at TP4 and TP10. The signal voltage at TP4 or TP10 is proportional to the reel speed. RV1 and RV2 are adjusted so that the signal voltages at TP4 and TP10 become the predetermined values when the input frequency is at the specified value. The oscillator, which is connected to TP20 through TP23, is set at 3.84 kHz by setting the voltage at TP4 at 5V DC with resistors RV1 and RV2. This frequency corresponds to 20 rps.

The FG signal is 80mVp-p superimposed on 2.5 VDC. IC6 through IC10 are used to detect the reel revolution , and IC5 is used to detect the reel direction. The supply reel speed servo control circuit performs the same operations.

The PB CTL signal is fed to the PB CTL signal demodulator consisting of monostable multivibrator IC12 and a low-pass filter containing two stage filter elements. The demodulator output, which is proportional to the tape speed, appears at TP13. This signal is 2 volts at 300 Hz or in the x10 tape speed mode. This demodulator output signal is fed through IC13, Q1, and D11 to the speed control loop. The signal can be seen on the CRT connected to TP15. The control circuit consisting of IC13, Q1, and D11 is used to set the reel speed at ten times normal value. The reel speed ratio detector consisting of IC17 is used to read out the actual tape radius within cassette KCA, if used, when the machine is operating in the FF mode. The signal can be seen on the CRT connected to TP14. The H KCA signal is fed to IC14 and IC15. The reel speed reference signal generator consisting of IC16 and resistors is used to generate the reference signal for detecting the reel speed when the machine is operating in the FF or REW mode. The output of the reel speed reference signal generator is fed to pins 5 and 10 of IC11.

The reference voltage which corresponds to 7, 10, or 14 rps can appear at TP15 when the machine is operating in any mode except the x10 mode. Pins 5 through 7 of IC17 constitute a comparator in the speed servo control loop. The signal passing through TP15 is fed to the ramp signal generator consisting of C41 and R84. The ramp signal generator output is fed through pin 5 of IC17 to a pair of comparators in IC11 which compare the speed signals with their references in the FF and REW modes. Pins 8 through 10 of IC11 constitute the comparator operated in the FF mode, and pins 5 through 7 of IC11 constitute the comparator operated in the REW mode. The comparator output at pin 7 or 8 of IC11 is fed to the appropriate reel motor drive amplifiers through pins 1 and 3 of IC45, and pins 1 through 3 of IC47 in the take-up reel motor drive system, and through pins 1 and 3 of IC46 and pins 5 through 7 of IC47 in the supply reel motor drive system. These amplifiers can amplify the voltage signals but cannot drive the motors directly.

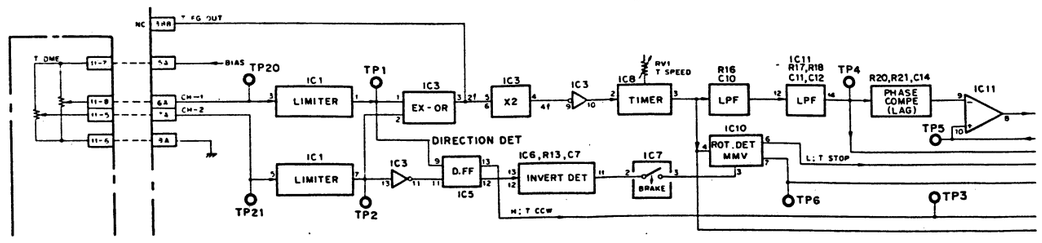

Fig. 5-33 Block Diagram of the Motor Speed Detector Circuit

Functions: Amplifying the FG signal
Demodulating the reel speed signal
Detecting the direction of reel motion
Detecting the stopping of the reel
Comparing a pair of speed signals
Amplifying the error signal

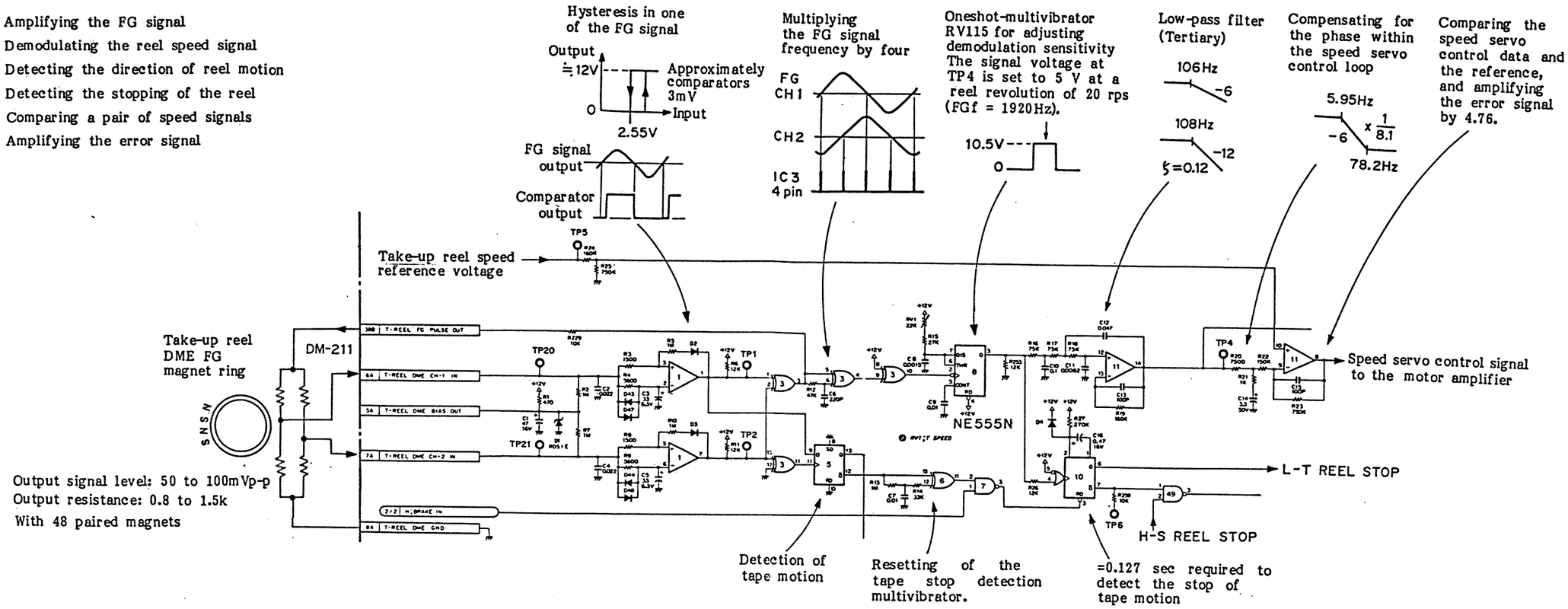

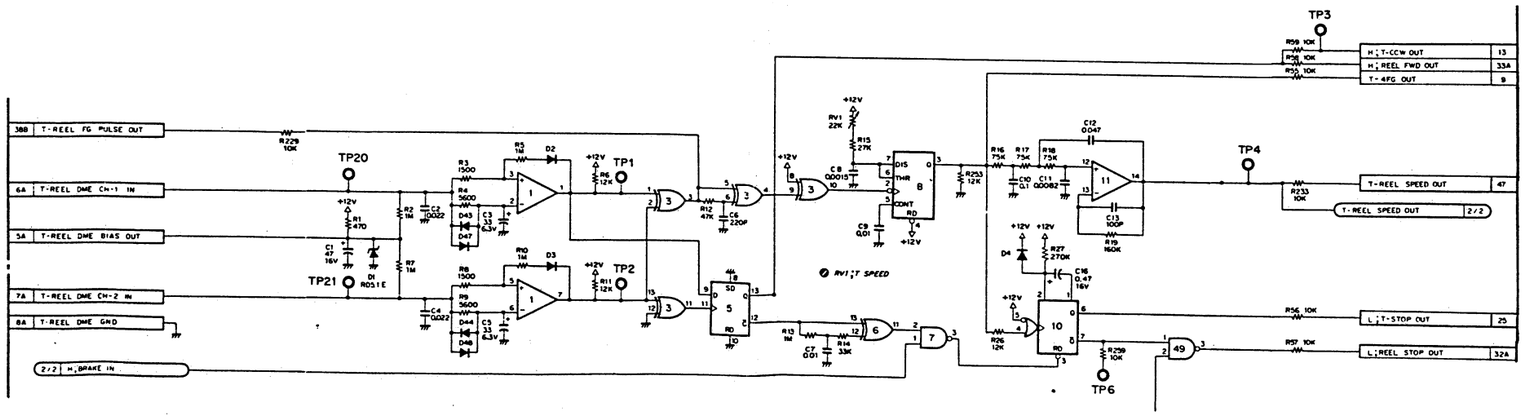

Fig. 5-34 Circuit Diagram of the Tape Speed Detector Circuit

(vi) Circuit diagram and description of the speed servo control reference circuit operated in the FF mode

Functions: Comparing between a pair of speed signals
Amplifying of the error signal
Comparing of the x10 tape speed signals (data and the reference)
Amplifying the error signal
Comparing between a pair of speed signals

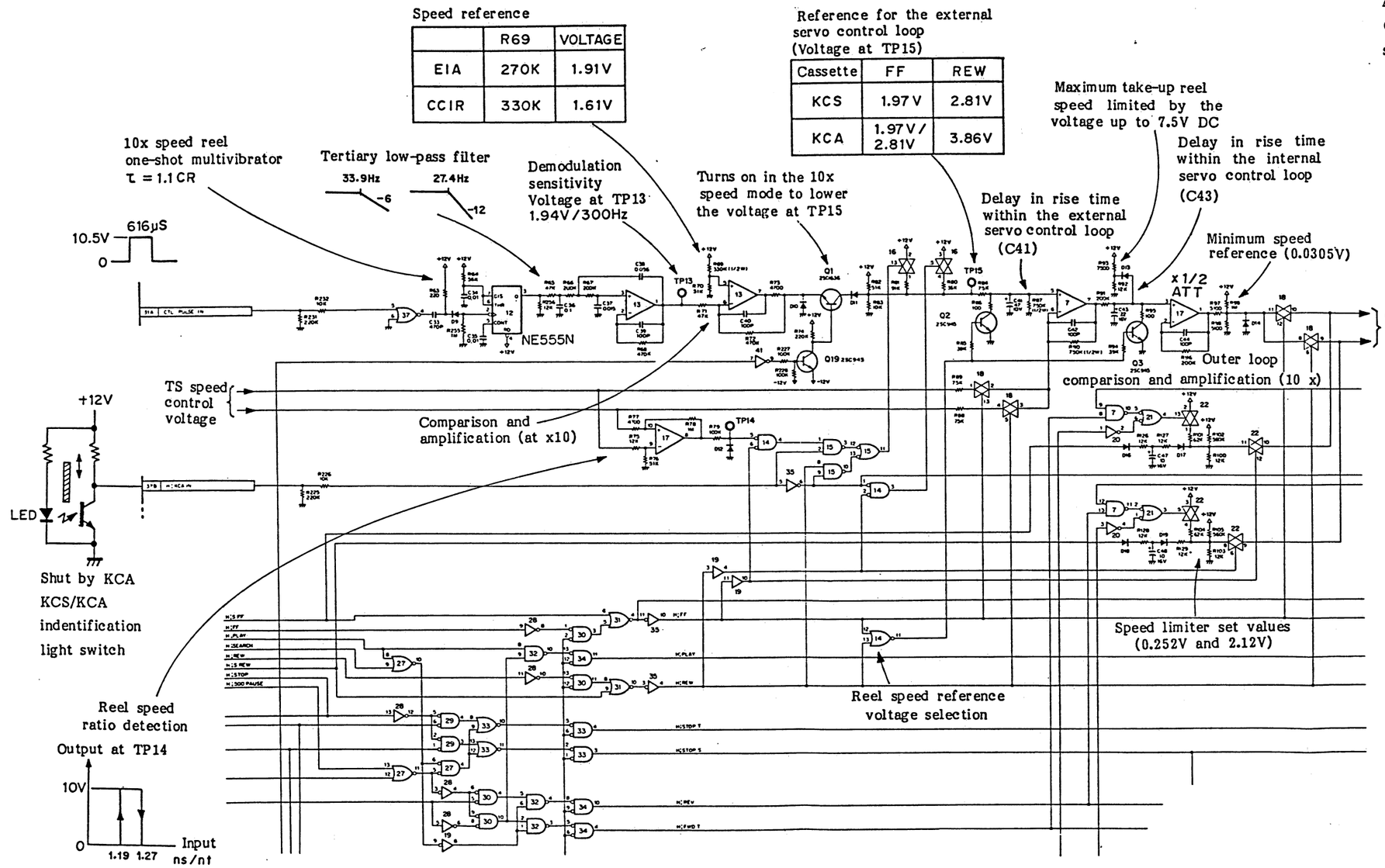

Fig. 5-35 Circuit Diagram of the Speed Servo Control Reference Circuit Operated in the FF Mode

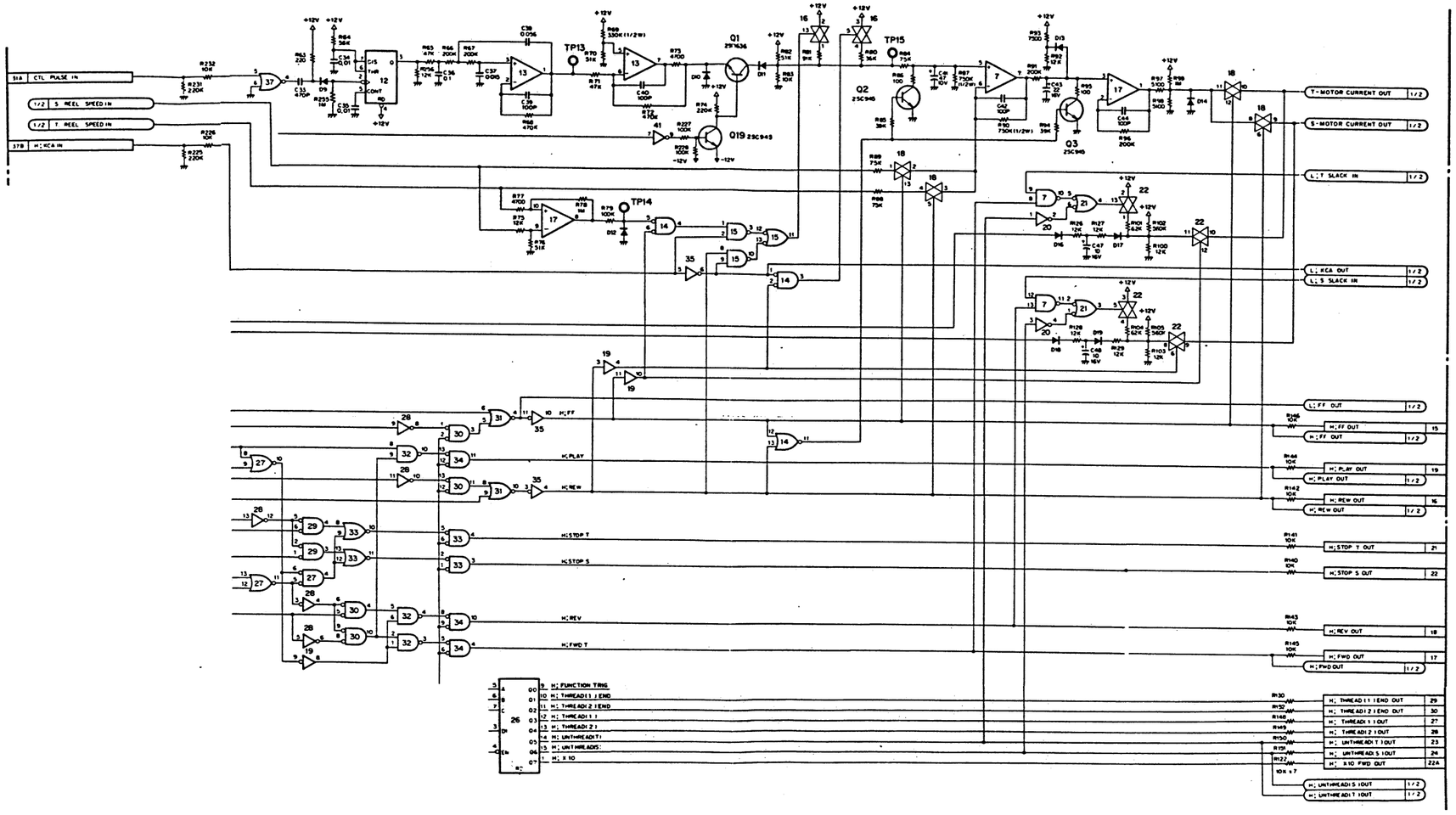

Fig. 5-35 Circuit Diagram of the Speed Servo Control Reference Circuit Operated in the FF Mode

(vii) Block diagram and description of the tension servo control reference voltage generator circuit operated in the FF mode

The tension servo control amplifier operated in the FF mode consists of IC515.

In the FF mode, a signal at pin 9 of IC514 is fed to the limiter consisting of Q501 and Q502. The limiter output appearing at TP505 is fed to pin 14 of IC515. IC515 constitutes a comparator for the external tension servo control loop in the FF mode.

The reference voltage for the tension servo control loop in the FF mode, or 0.33V appearing at pin 12 of IC515, can be obtained by a resistive divider.

The voltage at TP505 is used as a reference voltage for the internal servo control loop. Pins 5 through 7 of IC515 constitute the comparator within the internal servo control loop.

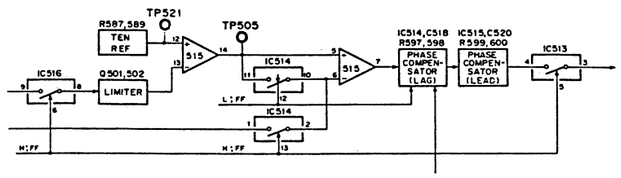

Fig. 5-36 Block Diagram of the Tension Servo Control Reference Voltage Generator Circuit Operated in the FF Mode

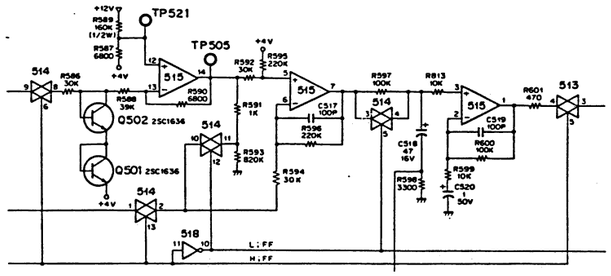

Fig. 5-37 Circuit Diagram of the FF Tension Servo Control Circuit

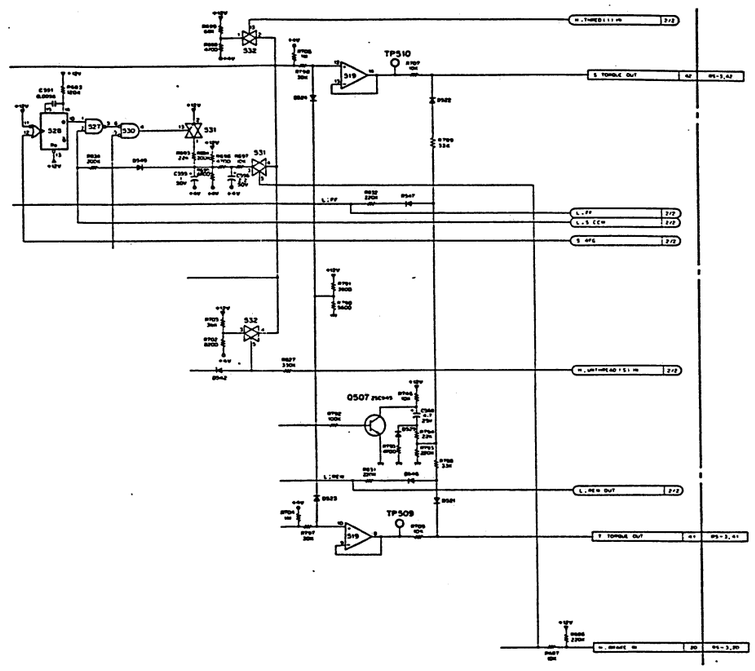

Fig. 5-39 Circuit Diagram of the Brake Torque Set Circuit

Functions: Reference voltage for the FF tension servo control circuit
Comparison
Amplification
Phase correction
Setting of torques for the brake, threading, and unthreading

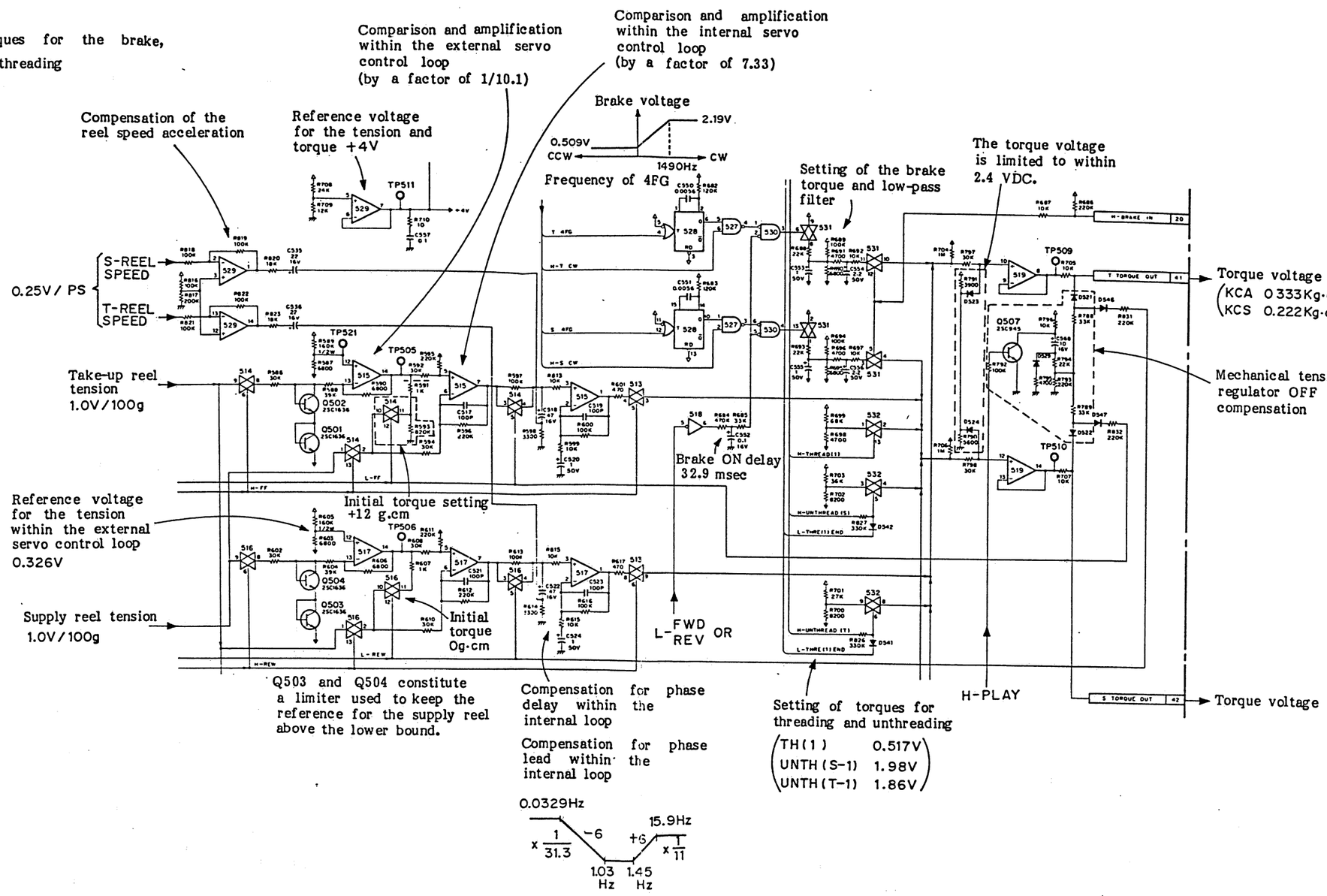

Fig. 5-38 Circuit Diagram of the FF Tension Servo Control Circuit and Torque Set Circuit

5-6. Brake Operations

Reel brake outline

The reel brake is made by generating a brake torque with the reel motor. The brake torques for the take-up and supply reels apply tension to the tape. Thus, the torque values depend on the direction of reel motion.

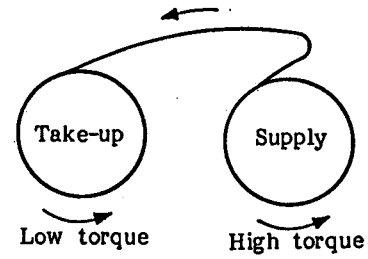

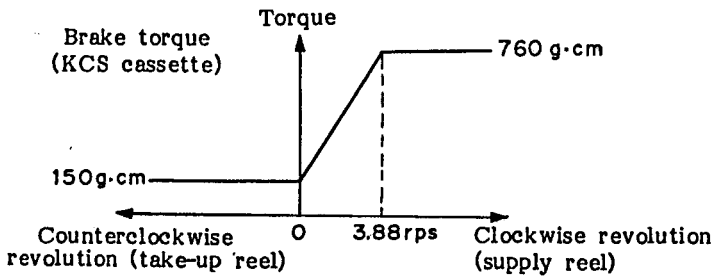

Fig. 5-22 Reel Motion and Brake Torque

Setting the brake torque

Operation mode before brake is applied	Circuit parameters		Cassette	
	Take-up	Supply	KCS	KCA
FF, FWD	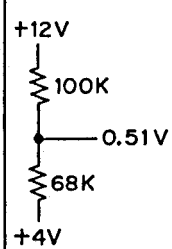	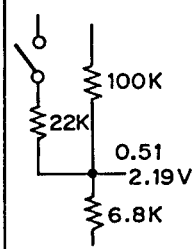	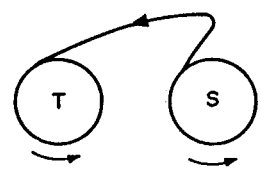	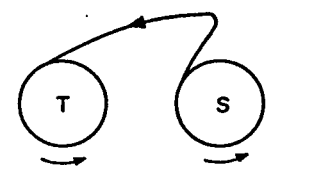
REW, REV	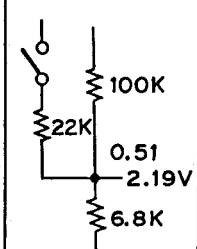	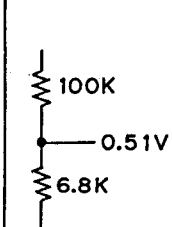	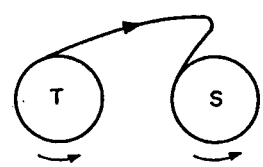	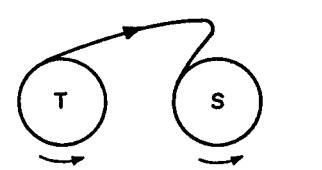

Torque and tension during threading and unthreading

Table 3-2 lists the torque and tension during threading and unthreading. The reel motor is driven at constant torque during unthreading (1) (the threading arm returns to the home position).

The tape contacts the tension detector during unthreading (2) (the threading ring returns to the home position), establishing the tension servo control loop. The tension which has been set during unthreading (T-2) is a little higher than the required value by the amount that can vary due to the temperature drift of the tension detector.

Torque and tension during threading and unthreading

Operation mode	Torque drive (Notes 1 and 2)				Operation mode	Tension servo control loop		
	Circuit parameter	State of the mechanical structure	Torque value KCS	Torque value KCA		Circuit parameter	State of the mechanical structure	Tension
			g·cm	g·cm				g
TH(1)	+12V, 68K, 0.517V, +4V	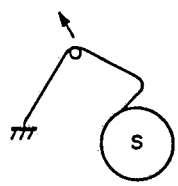	140 ±15	200 ±20	TH(2)	270K, 0.34V, 12K	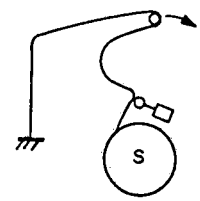	28～32
UNTH (T-1)	27K, 1.86V, 8.2K	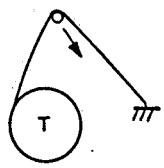	390 ±40	600 ±60	UNTH (T-2)	270K, 43K, 1.96V, 12K	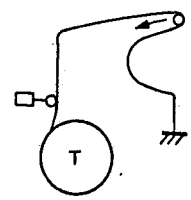	160～180
UNTH (S-1)	36K, 1.48V, 8.2K	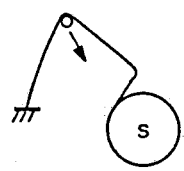	300 ±30	470 ±50	UNTH (S-2)	270K, 120K, 1.01V, 12K	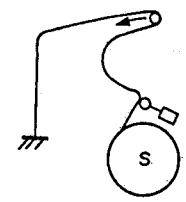	82～94

Notes: 1. The electromagnetic torque of the motor relates to the reference voltage as follows:
KCA: 333 gcm/A
KCS: 222 gcm/A

2. The motor shaft loss torque is 25 gcm.
3. The reel is clamped by the mechanical brake.

Brake torque and torque set during threading or unthreading

The threading torque generator circuit issues the brake torque signal, thread-1 signal, and thread-2 signal. When the thread-1 is issued, the supply reel motor is driven at constant torque. When the thread-2 signal is issued, the tension control servo loop is established.

The take-up and supply reels revolve at constant torque during unthreading. When the thread-2 signal is issued, the tension servo control loop is established during threading.

When the thread-2 signal is issued, the tension servo control loop is established for the supply reel; when the thread-1 signal is issued, the take-up and supply reel torques are set at the designated point. The torque reference applied to IC530 is fed to IC532.

The brake torque is not kept unchanged (i.e., the brake torque reference voltage is generated by IC-528 (multivibrator) and IC-527/530). This voltage is fed to the brake through a low-pass filter.

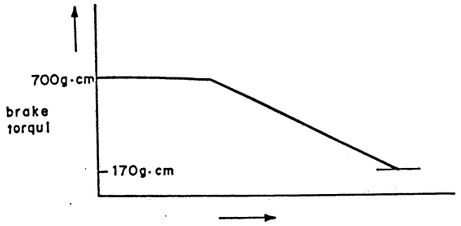

Speed detector circuit RS-3

Speed servo control generator reference Tension detector circuit RS-3

circuit operated in the FF mode RS-4

Function gate circuit RS-3

Tension servo control/brake reference generator circuit operated in the FF/REW mode RS-4

Brake torque generator circuit Brake: ON

BRAKE ON

Brake torque generator circuit Brake: ON

BRAKE ON

Tension reference generator circuit operated in the SEARCH mode RS-4

Reel motor drive circuit RS-3

Speed servo control switch: ON

AMP

AMP

AMP

Torque: ON

Take-up reel motor

M

Speed servo control swtich: ON

AMP

AMP

AMP

Torque: ON

Supply reel motor

M

Tape protection circuit RS-4

Speed detector circuit RS-3

Function gate circuit RS-3

Reel motor drive circuit

Speed servo control switch: ON

AMP

AMP

AMP

Torque: ON

M Take-up reel motor

Speed servo control switch: ON

AMP

AMP

AMP

Torque: ON

M Supply reel motor

Speed servo control reference generator circuit operated in the FF mode RS-3

Tension servo control/brake reference generator operated in the FF/REW mode

Threading torque reference generator circuit

UNTH(T) &TH(1)END

TH(1)

UNTH(3) &TH(1)END

Tape protection circuit RS-4

Tension detector circuit RS-4

Tension reference generator circuit operatec in the SEARCH mode RS-4

4-5. FF Tension Servo Control and Torque Setting Circuit

Functions: Reference for the tension servo control loop used in the FF mode
Comparison
Amplification
Compensation for the phase shift during transient period
Brake torque setting during threading and unthreading

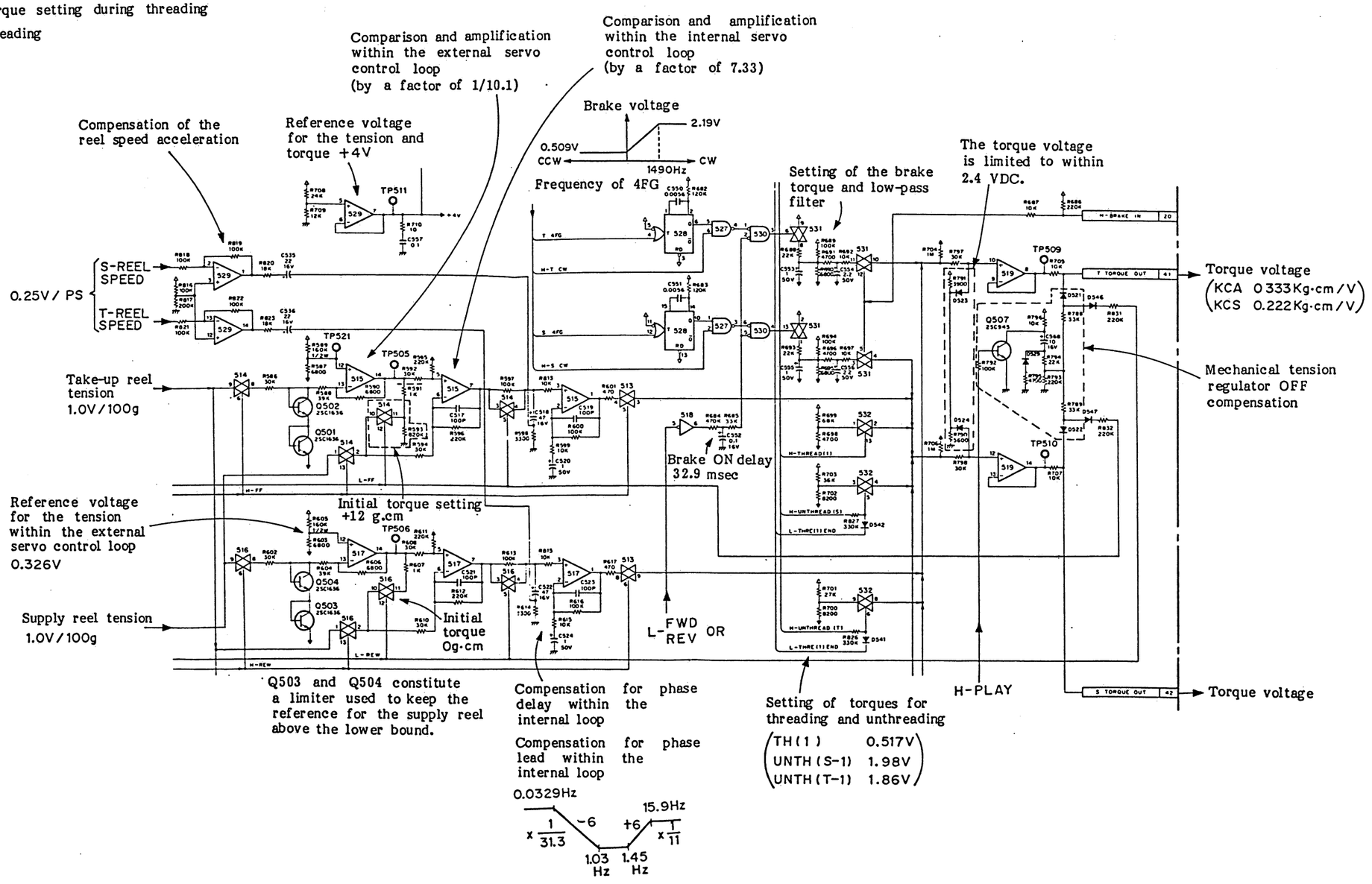

4-6. Search Tension Servo Control Circuit

Function: Reference for the tension servo control loop used in the SEARCH or STOP mode during threading or unthreading

Comparision

Amplification

Compensation for the phase shift

Amplifier in supply system is operating.	Tension reference voltage
SEARCH FWD	0.56V
REV	1.13V
STILL	0.34V
DT ON STILL	0.56V
STOP	0.34V
TH (2)	0.34V
UNTH (S-2)	1.01V

Capstan speed voltage

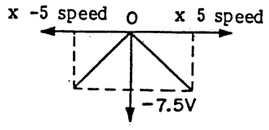

Amplifier in take-up system is operating.	Tension reference voltage
SEARCH FWD	1.13V
REV	0.56V
STILL	0.34V
PLAY	1.13V
STOP	0.34V
UNTH (T-2)	1.96V

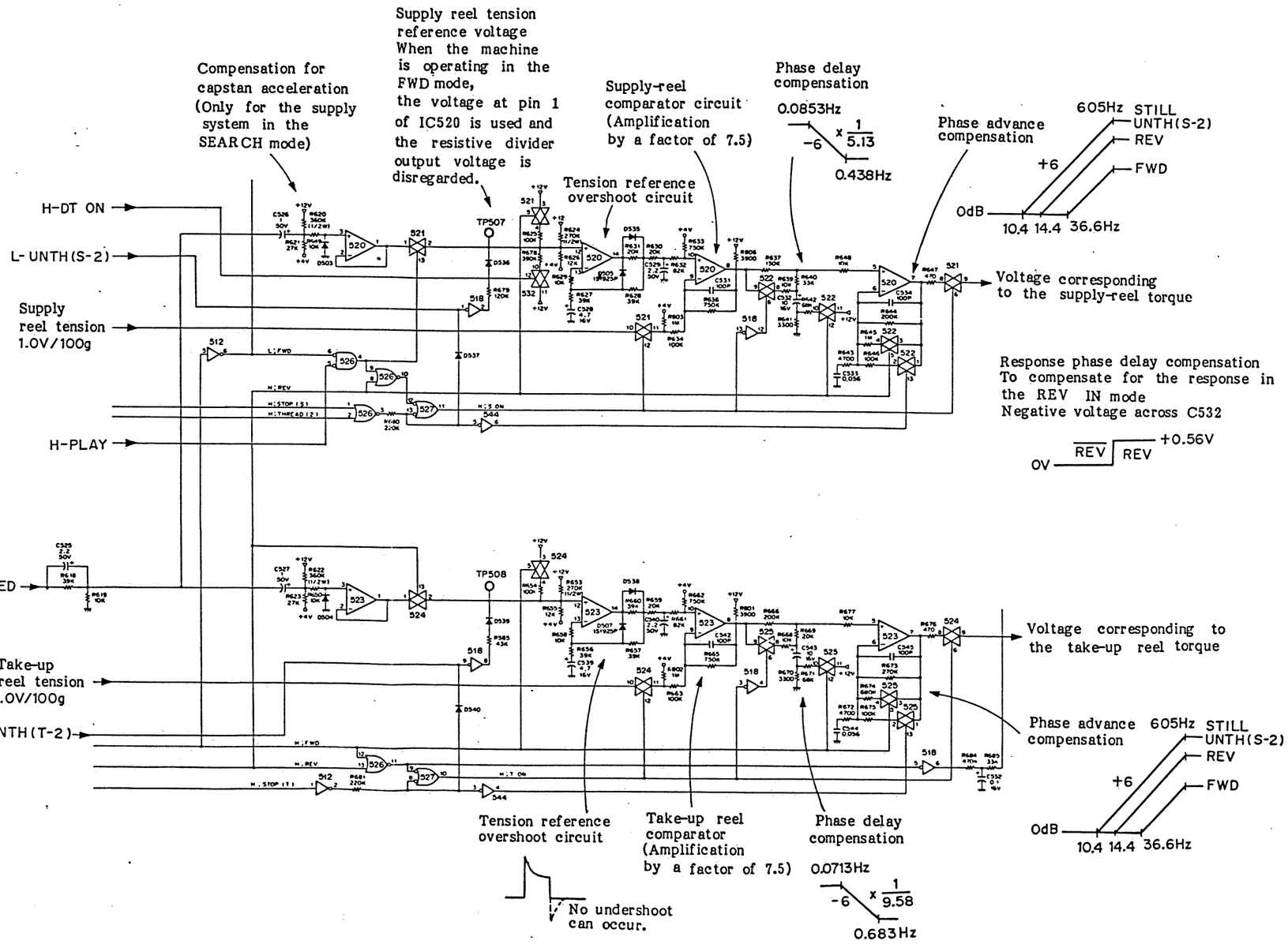

Functions: Reference for the tension servo control loop operated in the FF mode
Comparison
Amplification
Compensation for the phase shift during transient period
Torque setting during threading and unthreading

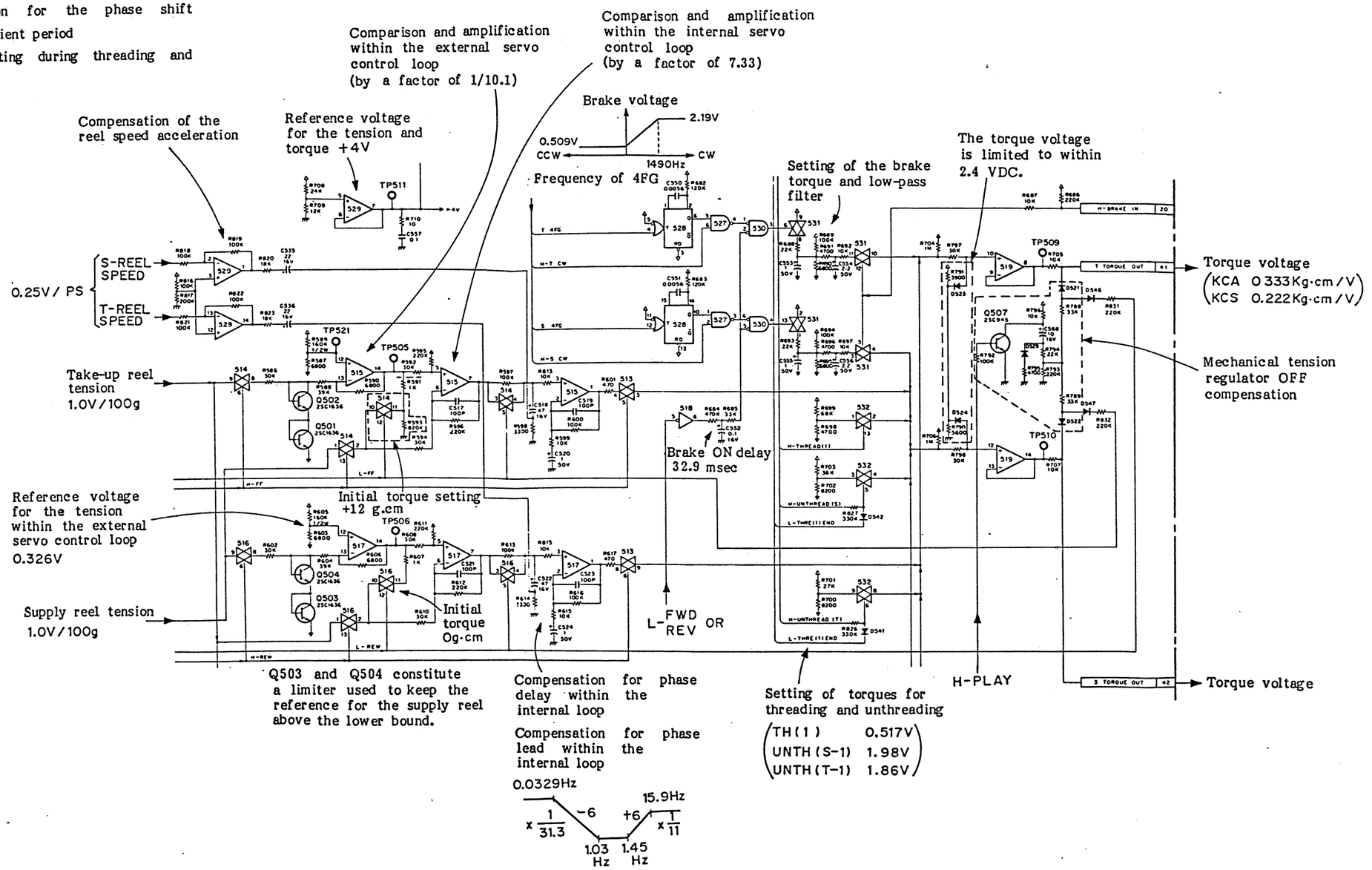

Fig. 5-17 FF Tension Servo Control and Torque Setting Circuit

5-7. Control Function Gate Circuit

The control function gate circuit receives multi-clock signals 1 and 2, and the power-on signal from the system controller.

Multi-clock signals 1 and 2 are used to decode the serially multiplied signal and to issue the output signals to be used in IC25 and IC26.

The function gate receives the commands and statuses and issues the reel operation signals in the respective modes.

The brake signal is generated by brake latch IC29.

When the operating mode is changed, the mode change signal is issued from the system controller. The mode change signal is fed to pin 8 of IC29 or the function trigger. This signal is latched by a pair of gates in IC29.

When the reel stop signal is fed from pins 7 and 19 of IC10 to pin 13 of IC29 through pin 3 of IC49, the latch is released, and the reel system is set in the brake mode.

The tape protection latch (IC50) latches the tape protection signal, if any.

Control System Description

The control signals are issued from the system controller. The commands from the pushbutton switch are latched and multiplied in time series. These encoded commands are decoded when used.

The signals input to IC25 and IC26 are multiplied. IC25 specifies the short FF, FF, PLAY, SEARCH, REW, short REW, STOP, and 500-pause modes. IC26 is a function gate which issues a single pulse when the button is pressed. If the arm is open when the cassette is set, the thread-1 end signal goes high. The ring can then revolve. If the ring is stopped when the arm is open, the thread-2 end signal goes high.

The tape is sent out of the supply reel during threading, and the tape is wound on the supply reel during unthreading. If the power switch is turned on while the tape is being set, the tape is wound on the take-up reel during unthreading. When the tape protection signal is sent, the tape is wound on the take-up reel even if it is detected in the take-up reel. In this state, the brake in the supply system is applied.

The circuit in the X10 operation mode will be described.

The take-up and supply reel motors are turned off when standby is specified by the system controller.

The power-on signal goes low 1 second after the power is turned on; thereafter, the power-on signal goes high. The power-on signal is muted by Q4, and the muted power-on signal is fed to the function gate. The function gate issues the function signals responding to the input commands and statuses.

The brake latch and tape protection latch are also provided.

The brake latch is used to apply brakes to the reel. When the function is changed, the corresponding function trigger signal is issued to stop the reel motion in any modes other than the PLAY and SEARCH modes. The function trigger signal is latched while the tape is being stopped. When the reel stops, the function trigger signal is released. The brake signal is generated by the reel servo control signal. When the brake is released, the system controller output signals are gated by a function gate and used to specify the operation modes. The motor amplifier gate consisting of Q6, Q7, Q8, and Q11 is used to switch the motor amplifier.

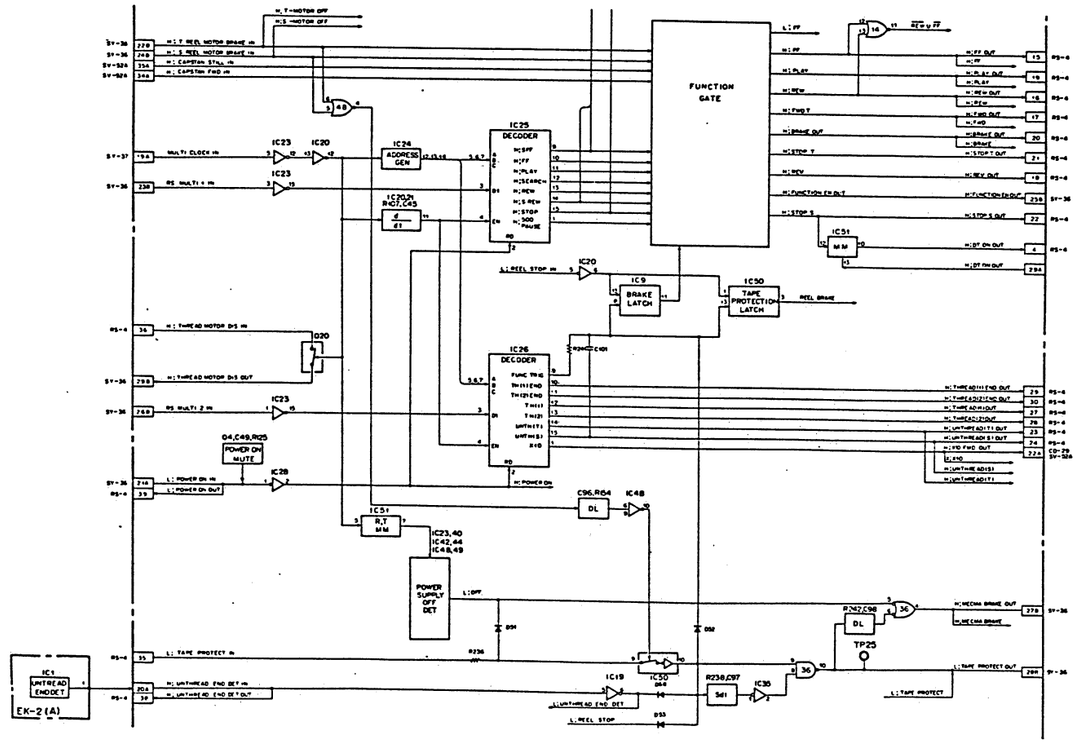

Function Gate Circuit

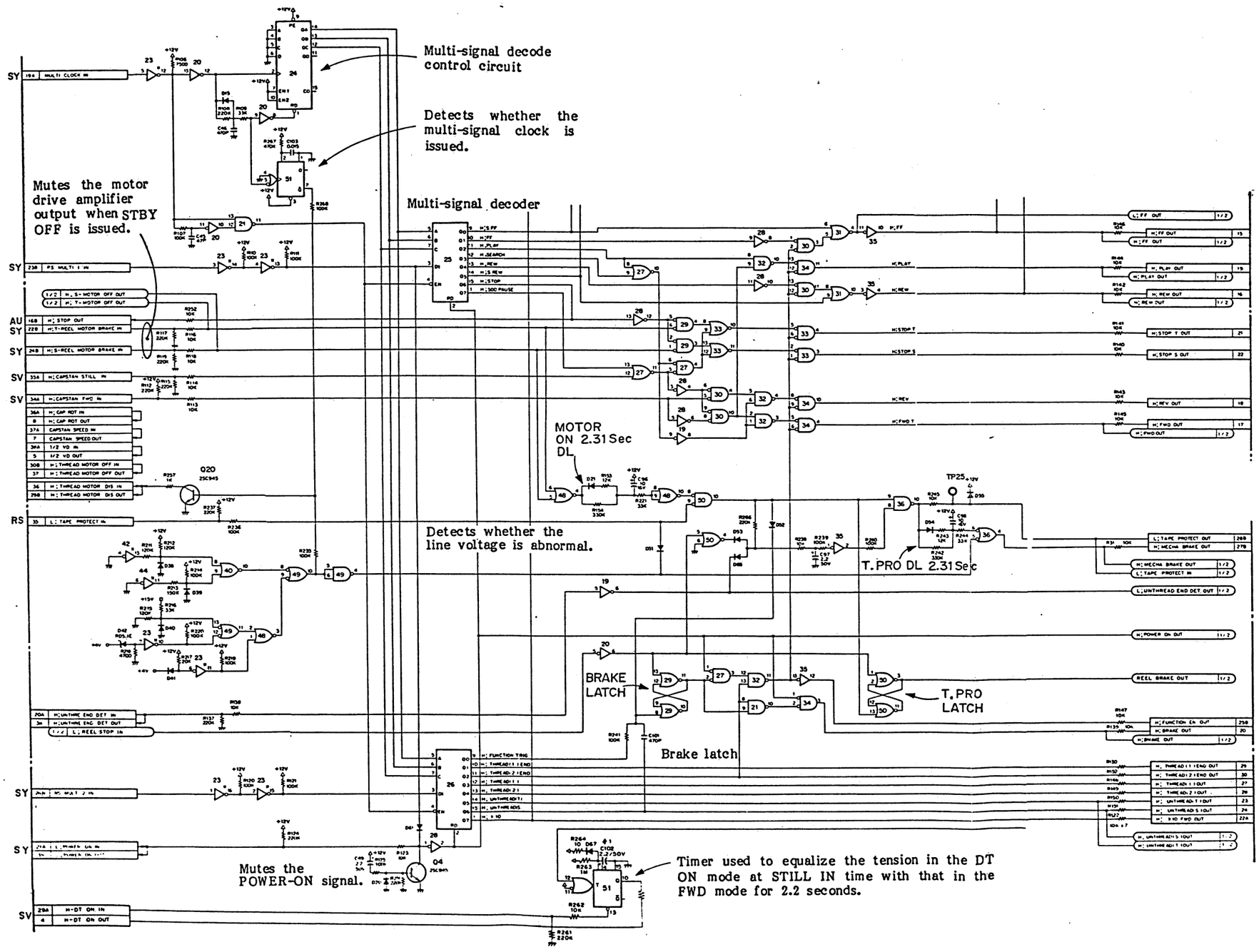
Multi-signal decode control circuit
Detects whether the multi-signal clock is issued.
Mutes the motor drive amplifier output when STBY OFF is issued.
Multi-signal decoder
MOTOR ON 2.31 Sec DL
Detects whether the line voltage is abnormal.
T.PRO DL 2.31 Sec
BRAKE LATCH
T.PRO LATCH
Brake latch
Mutes the POWER-ON signal.
Timer used to equalize the tension in the DT ON mode at STILL IN time with that in the FWD mode for 2.2 seconds.

4-7. Function Gate Circuit

Functions: Generates the mode control signals necessary for operating the reel when the commands are sent from the system controller if the statuses are sent from the capstan.

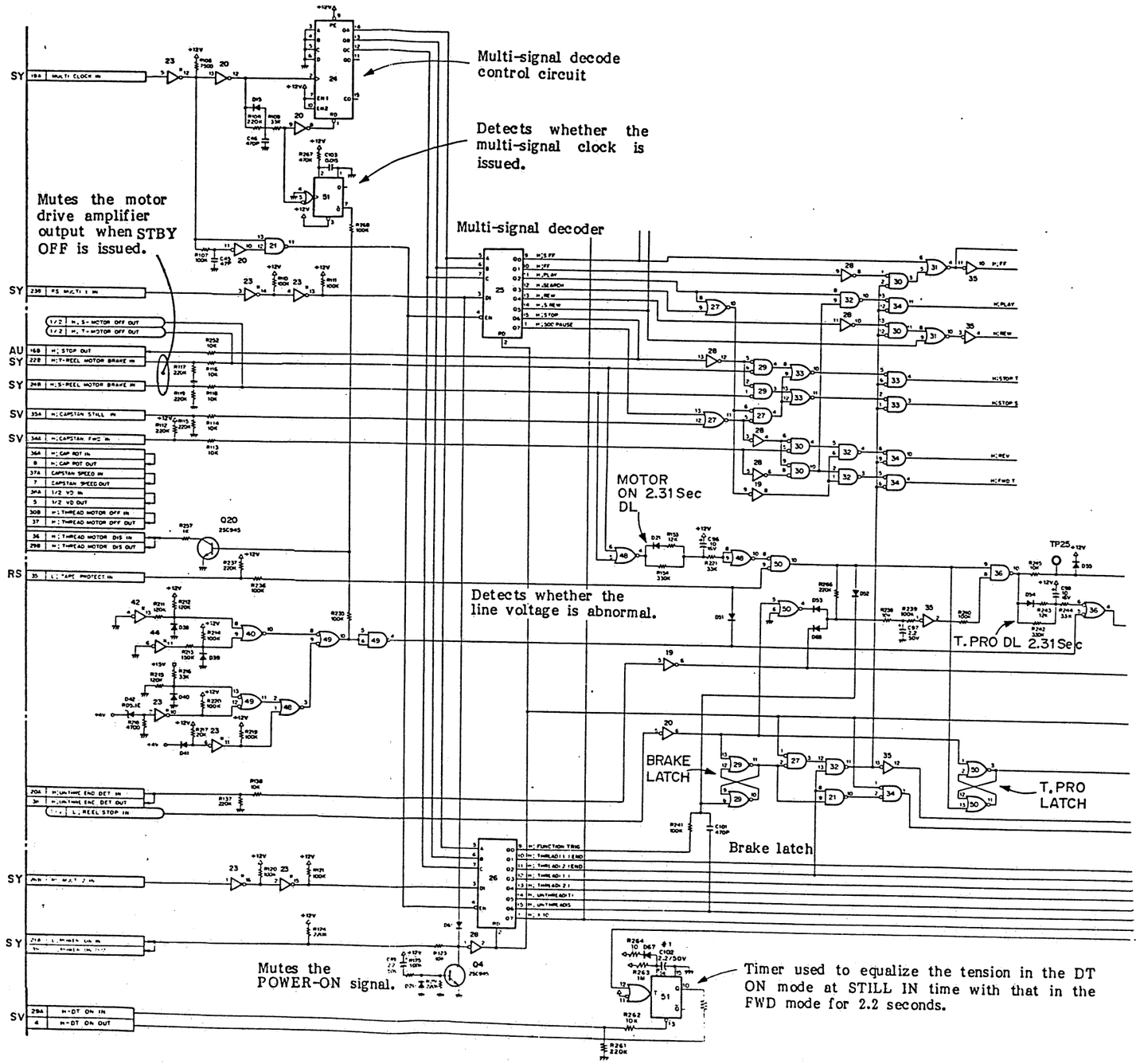

5-8. Tape Protection Circuit

The tape protection circuit is used to protect the tape. When an abnormal state is detected in IC456, the tape protection signal appears at pin 13 of IC456, the signal voltage at pin 10 of IC36 goes low, and the tape is protected by the tape protection signal.

When the tension is found excessive, the signal voltage at pin 9 of IC546 goes high. The protection signal is issued from pin 13 of IC546 after a delay time determined by IC541 after the excessive tension is found. The tape protection signal is issued to pin 3 of IC546 when the reel revolves at 1/5 of the normal speed in the SEARCH mode.

The tape protection signal is applied to pin 12 of IC546 when the take-up and supply reels start revolving in the incorrect direction in the FF, REW, FWD, or REW mode. This signal is activated when the capstan motor revolves at 1/5 of the normal speed or above.

The tape protection signal is issued from pins 5 and 11 of IC539 when the stop signal is issued from pins 3 and 10 of IC539 if the reel is stopped in the FF, REW, FWD, or REV mode.

The tape protection signal is issued from pin 4 of IC539 when the reel starts revolving in the STOP mode.

The reel cannot rotate in the STOP mode. The tape protection signal is fed to pin 10 of IC539 during threading or unthreading.

When the reel stops or the tape slackens during threading or unthreading, the tape protection signal is output from pin 13 of IC539.

The signal voltage at pin 2 of IC546 goes high when no current flows through the LED-CdS sensor assembly, and the tape protection signal at pin 13 of IC546 goes low. The input voltage at pin 13 of IC530 is the same as that at pin 10 of IC546. When the drift canceler circuit cannot operate due to failures or because the operating range is out of control, the signal voltage at pin 12 of IC546 goes high. Thus, the signal voltage at pin 11 of IC530 inhibits threading. The "L:TH motor dis" signal is fed to the SY-36 board through TP513 to stop the threading motor.

Power Supply-off Detector

The power supply-off detector consists of IC40, IC42, IC48, and IC49. When the power supplies for the reel servo control loops are turned off, the tape protection signal is issued to stop the reel motor. The mechanical brake on signal is then issued to the SY-36 board.

Tape Protection

The "L:tape protection" signal appearing at TP25 is fed to the SY-36 board together with the "H:mechanical brake" signal, passing through NAND gate IC-36. When the tape protection signal is issued while the machine is running in the FF, REW, FWD, or REV mode, the machine stops. If the tape protection signal is continuously issued, the machine enters the EJECT mode.

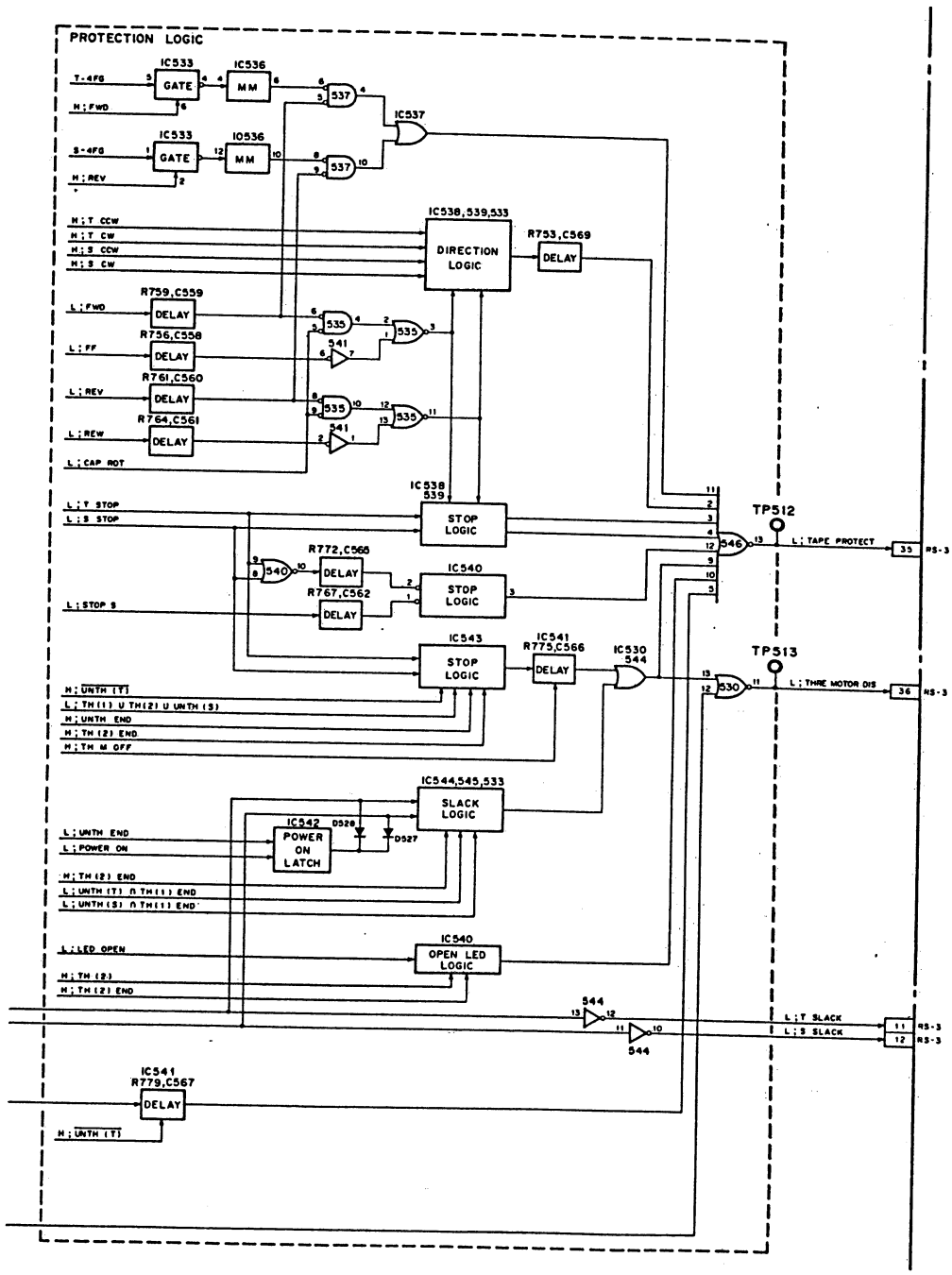

Tape Protection Circuit

4-8. Tape Protection Circuit

Functions: Detects the abnormal states when the reel motion is detected, the tape tension is detected, and when the command to operate the reel is issued.

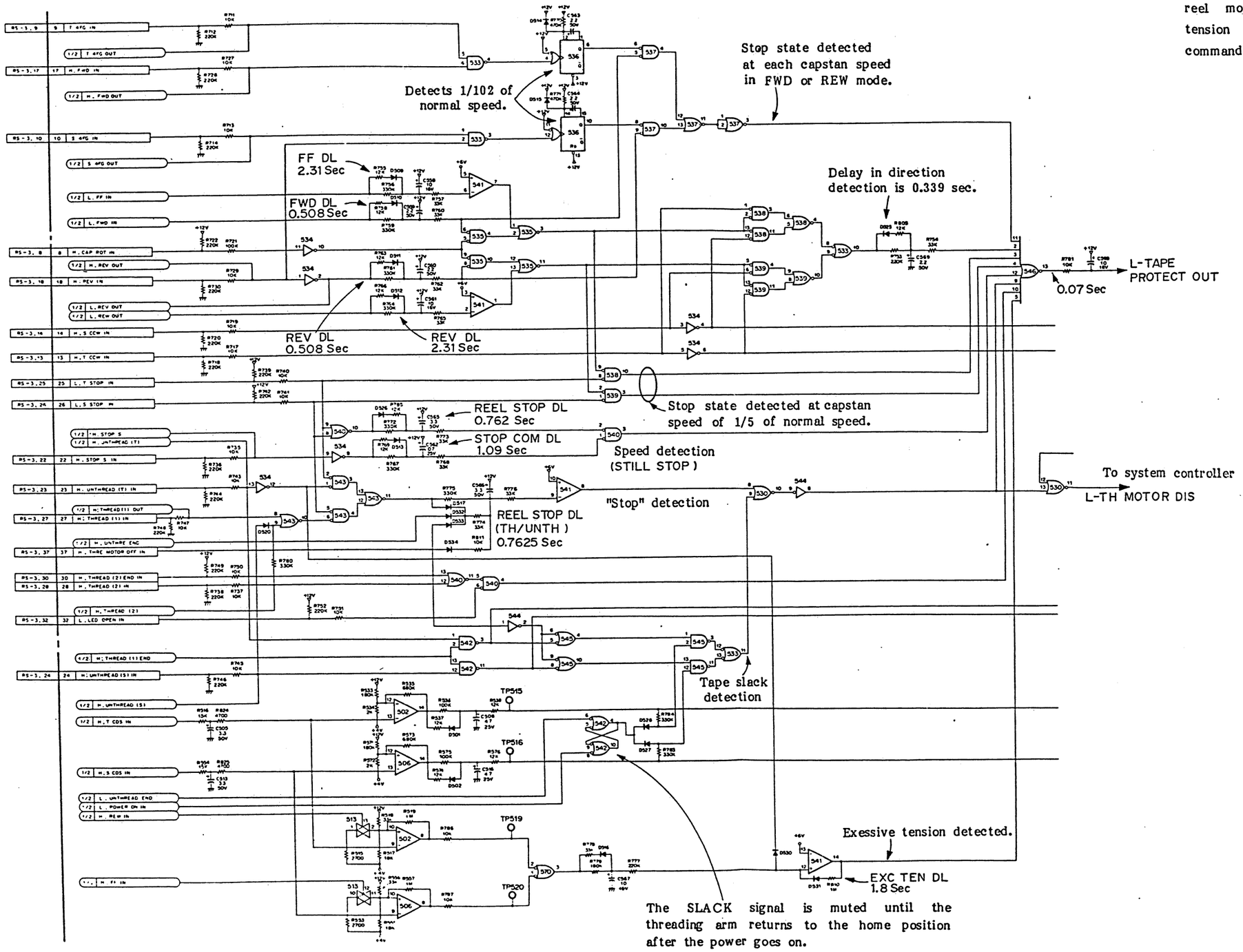

4.7. Function Gate Circuit

Functions: Generates the mode control signals used to operate the reel when the commands are issued from the system controller and when the statuses are issued from the capstan.

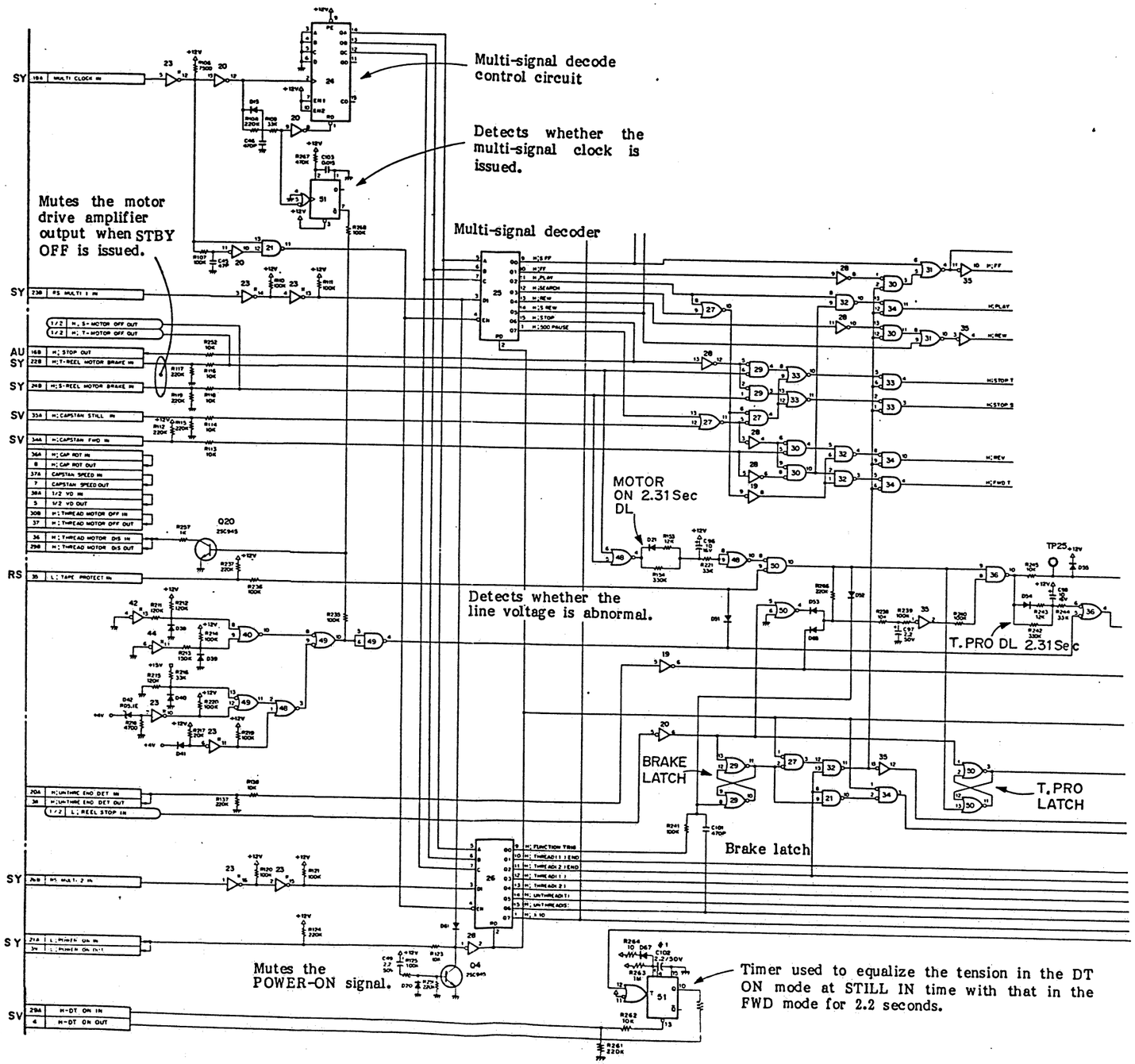

Tape Protection Circuit Operations

When one of the input voltages to IC-546 goes high, the signal voltage at TP512 goes low. When the excessive tension signal appears at pin 3 of IC510, the signal voltage at IC541 goes low. When the excessive tension signal appears at TP519 or TP520, the signal voltage at pin 3 of IC510 goes high. The delayed tape protection signal is then issued.

The retriggerable MMV is triggered by the take-up or supply reel FG signal applied to pins 4 and 12 of IC536 in the SEARCH, FWD, or REW mode. The retriggerable MMV output can appear at pins 6 and 10 of IC536. If the capstan speed is less than 1/60 the normal speed when the reel is full of tape, the pulse signal can directly be issued from the retriggerable MMV.

This mode is used to detect stop or rotation at ultra low-speed. If the reel revolving at ultra-low speed stops, the output voltage of IC537 goes high and the tape protection signal is issued.

The signal voltage at pin 12 of IC546 can detects the direction of rotation. The TCC-W or SEC-W signal to detect the direction of rotation is fed to the corresponding logic circuit. When the capstan is revolving at 1/5 of the normal speed in the FWD or REW mode, the stop state is detected by using the speed detection circuit in the reel speed signal demodulator circuit. The phase delays in the modes are adjusted by phase adjusters.

The signal voltages at pins 3 and 11 of IC535 are the delayed mode signals in the FF, FWD, REV, or REW mode. If the reel does not rotate in the specified direction, the signal voltage at pin 12 of IC546 goes high. The stop logic consists of IC546 (pins 5 and 11). When the reel stops, the signal voltage at pins 5 and 11 of IC546 goes high.

The signal voltage at pin 4 of IC546 is used to detect whether the reel is stopped in the STOP mode.

The signal voltage at pin 10 of IC546 and the signal voltages at pins 8 and 9 of IC544 and at pin 8 of IC530 are used to detect whether the reel is rotating during threading or unthreading.

The threading motor is stopped in a delay time of 0.7 to 0.8 sec after the reel is stopped during unthreading.

The signal voltage at pin 9 of IC530 is used to detect the tape slack. When the tape becomes slack, the machine can stop immediately. When the tape is slack in each mode, the tape protection signal is issued.

If the power is turned on and latched after the power is turned off with the tape being set on the reel, the drift compensation circuit cannot compensate for the drift. The tape is being set and thus the compensation circuit does not operate until the unthreading-end signal is issued by rewinding the tape. In this state, the detection of the slack state is inaccurate. Thus, the slack state cannot be detected until the machine enters the unthreading state after the power is turned on.

The signal voltage at pin 2 of IC546 is used to stop the reel motor when the current flowing through the LED in the CdS sensor is cut. The line voltage detector circuit is provided to check whether the line voltage is abnormal.

In the STANDBY mode, the MOTOR OFF signal is issued, so no tape protection signal can be issued.

The tape protection signal is latched by IC50 and released when the reel is stopped.

When the tape protection latch is set, the speed limiter is set.

The brake signal is not controlled by the speed limiter. When the tape protection signal is issued while the tape is being slackened, the tape is pulled once unless the speed limiter is provided. Thus, the speed limiter is necessary.

In the FF mode, the motor torque compensates for the tape slack. If the tape is slack or if the tape protection signal is continuously issued when the reel is stopped, the tape protection signal is continuously issued from the system controller by using D53 and a differential circuit. This establishes the EJECT mode, or the brake can be applied to stop the reel motor and the motor power supply can be turned off. Thus, the mechanical brake is applied. The mechanical brake is applied each time the detector output signal appears at TP25.

When an abnormal line voltage is detected at pin 5 of IC36, the mechanical brake is applied immediately.

Operation Required to Protect the Tape

Detection of abnormal states

Operation mode	Time constant for mode-ON delay (Note 1)	Reel motion detection				Tape tension detection			Protection output signal
		Stop		Revolution	Direction	Slack		Excessive tension	
		T	S	T.S	T.S	T	S	T.S	
PLAY	0.51 Sec	0.20 Sec Note 2			0.58 Sec	0.40 Sec	0.40 Sec	1.33 sec	TAPE PROTECT
FWD 1/5 of normal speed or more	0.51	0.20			0.58	0.40	0.40	1.33	TAPE PROTECT
FWD 1/10 of normal speed or less	0.51	1.10				0.40	0.40	1.33	TAPE PROTECT
STILL.STOP	1.1			0.83 Sec		0.40	0.40	1.33	TAPE PROTECT
REV 1/5 of normal speed or more	0.51		0.20 Sec		0.58	0.40	0.40	1.33	TAPE PROTECT
REV 1/10 of normal speed or less	0.51		1.10			0.40	0.40	1.33	TAPE PROTECT
FF	2.3		0.20		0.58	0.40	0.40	1.33	TAPE PROTECT
REW	2.3		0.20		0.58	0.40	0.40	1.33	TAPE PROTECT
THREAD(1),(2)	0		0.89						TH.MOTOR DISABLE (T.PRO)
UNTHREAD(T-1)	0	0.89							TH.MOTOR DISABLE (T.PRO)
UNTHREAD(T-2)	0	0.89							TH.MOTOR DISABLE (T.PRO)
UNTHREAD(S-1)	0		0.89						TH.MOTOR DISABLE (T.PRO)
UNTHREAD(S-2)	0		0.89			0.33 Note 3	0.33 Note 3		TH.MOTOR DISABLE (T.PRO)

Notes:

1: The detection signal can be received in this delay time after the operation in the respective modes is started.

2: The tape protection can be detected in the item designated by number. The number indicates the time constant for the detected delay.

3: No tape slack can be detected during unthreading due to the power-on sequence starting with the threading state.

Table 5-1. Detection of Abnormal Reel Motion and Tape Tension

Contents		Protection output signal	
		TAPE PROTECT	TH. MOTOR DISABLE
Power line failure	Either +15V, +12V, +4V, -12V, or -18V has failed due to defects of the power supply.	○	○
LED OFF	No current flows through the LED to detect the slacking of the tape.	○	
Multi-clock signal not issued	No multi-clock signal is input.	○	
Excessive motor-current timer	An excessive current (2.26 A corresponding to 1.45 Kg.cm). flows through the reel motor for 140 seconds or more.	○	

Table 5-2 Detection of Other Abnormal States

SECTION 6

COLOR FRAMING

SECTION 6
COLOR FRAMING

2. CTL AMPLIFIER (ON THE CF-9 BOARD)

The CTL amplifier supplies CTL recording current into the CTL head during REC mode, amplifies the PB CTL signal that is picked up by the CTL head, and shapes the PB CTL head signal into a rectangular waveform during PB mode.

2-1. Amplifier and Wave-shaper (IC523, IC522)

The CTL head (X) and (Y) terminals shown in Fig. 1 are connected to both ends of the CTL head windings. The picked-up PB CTL signal is passed through switch IC520 and sent to IC522 and IC523. The IC522 is the first stage amplifier. IC503 contains a dc bias circuit and feedback circuit.

IC522 output is sent to IC523 through C541 and C542. IC523 contains an inverting amplifier and Schmitt trigger circuit. The amplified signal is wave-shaped by the Schmitt trigger circuit and appears at pin 15 of IC523.

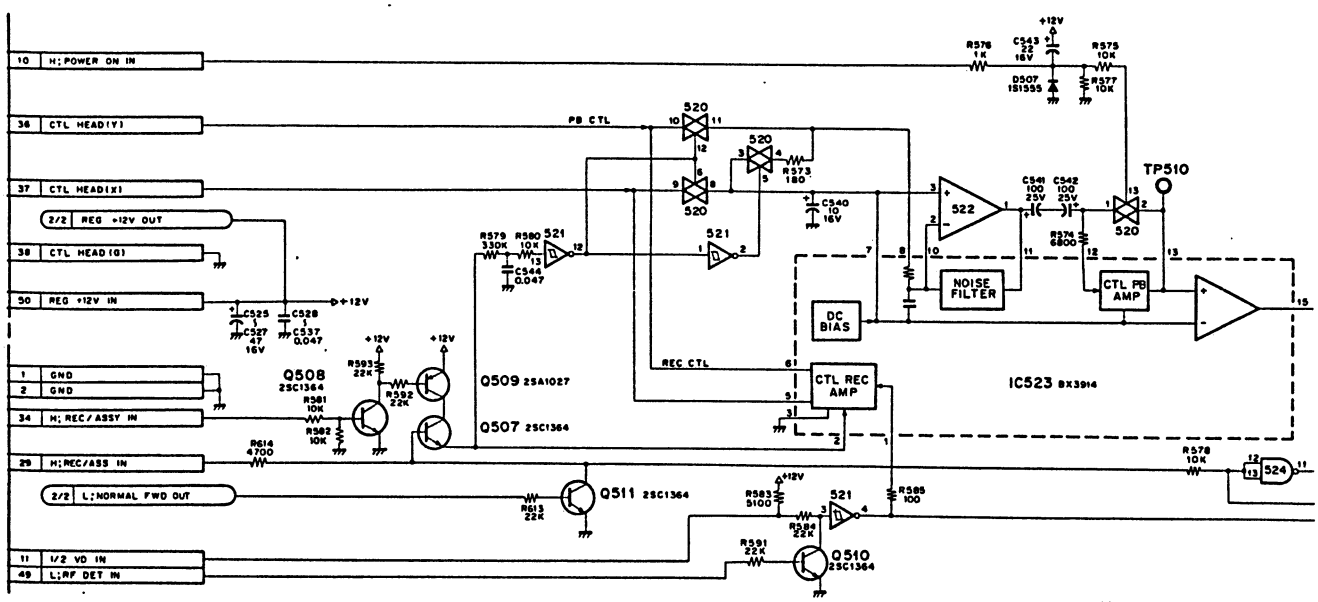

Fig. 1 CTL Amplifier Circuit Diagram

2-2. Record/Playback Select Circuit

Power (+12V) for the CTL record amplifier is fed to pin 2 of IC525 through Q507, Q508, and Q509. Since Q507 and Q509 are connected in series, failure of simple one transistor will not start the recording CTL signal. The [HIGH.REC] signal is also sent to pin 13 of IC521 that isolates the CTL head from the playback amplifier by electronic switch IC520. A switch at pins 3 and 4 of IC520 shorts circuit the input terminals of the CTL playback amplifier during REC mode, with 180 ohms plus the switch internal resistance. This is almost equal to the total of the CTL head internal resistance plus two switches' internal resistance. This total resistance provides the input offset current to the PB CTL amplifier IC522 so that IC522 output offset voltage is stabilized during the transient period between REC and PB modes. The PB CTL amplifier's dc bias is stabilized in the transient from REC mode to PB mode.

Without this circuit, different input resistances to IC522 between REC and PB modes will produce different dc current in its output due to the high gain of IC522. This may result in repeating the charge and discharge of the following coupling capacitor which will in turn saturate the following amplifier in the transient from REC to PB mode. The PB CTL amplifier cannot operate normally more than ten seconds in the worst case as a consequence.

This circuit ensures normal output the PB CTL signal 0.02 seconds after switching from REC to PB mode.

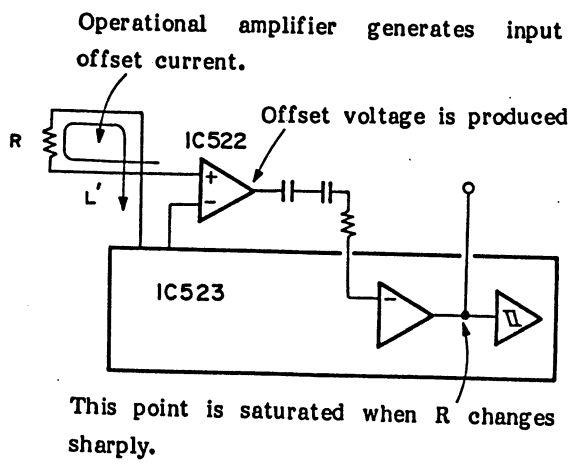

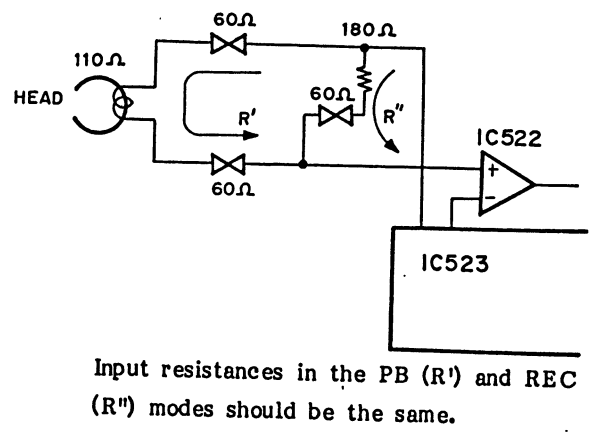

Fig. 2 Shorting Circuit in Record-to-Playback Switching Transient

2-3. POWER-on Reset Circuit

When the power switch is turned on in the BVU-800 series VTR, the threaded tape is first unthreaded and returned to the cassette. The reel servo's automatic calibration circuit is readjusted, and the tape is threaded again to set the unit to the PLAY or STOP mode. The PB CTL amplifier must stabilize within the threading period of about four seconds so that the PB CTL signal is correctly amplified.

When the power is turned on, C541 and C521 are charged to a voltage different from that of the PB mode. Initially charged voltage saturates the second stage amplifier in IC523 so that the PB CTL signal cannot be amplified correctly. The charging voltage into C541 and C542 in the PB mode is [IC522's output offset voltage-VR]. If IC522 output offset voltage is, for example, Vr + 1V, 4.5 seconds are required to stabilize the PB CTL amplifier. If the offset voltage is higher, ten or more seconds are required.

When the electronic switch shown in Fig. 3 is turned on, input impedance of IC523 second-stage amplifier from C542 is almost zero because it operates as a voltage follower with VR input. The electronic switch is turned on within 0.2 seconds $\simeq$ C543 x R577 after the power is on.

The PB CTL amplifier starts operating normally within 0.5 seconds after the power is turned on as shown in Fig. 3.

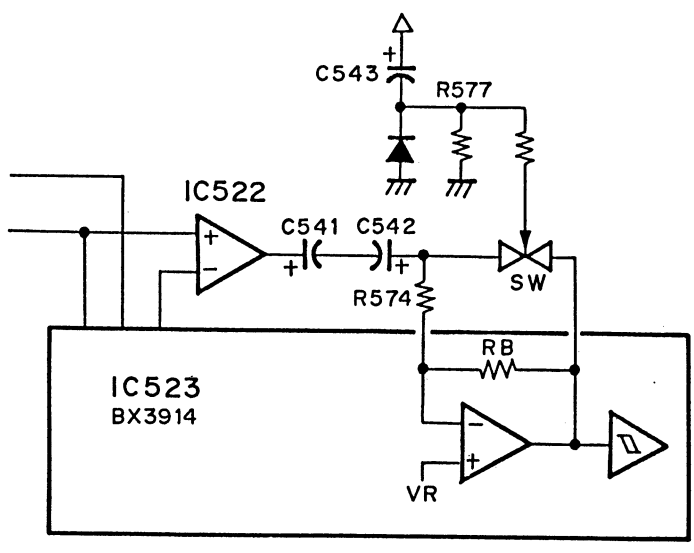

Fig. 3 POWER on Reset Circuit

3. CTL SIGNAL SHAPER (ON THE CF-9 BOARD)

This circuit processes various signals that are related to capstan movement such as search dial signal, speed signal, FG, and CTL, etc., and sends capstan status signals to the reel servo circuit. It also sends the CTL counter pulse to the system control circuit, detects the CTL pulse, and sends the output to the SV-24 board.

The circuit is described below in accordance with the block diagram in Fig. 4.

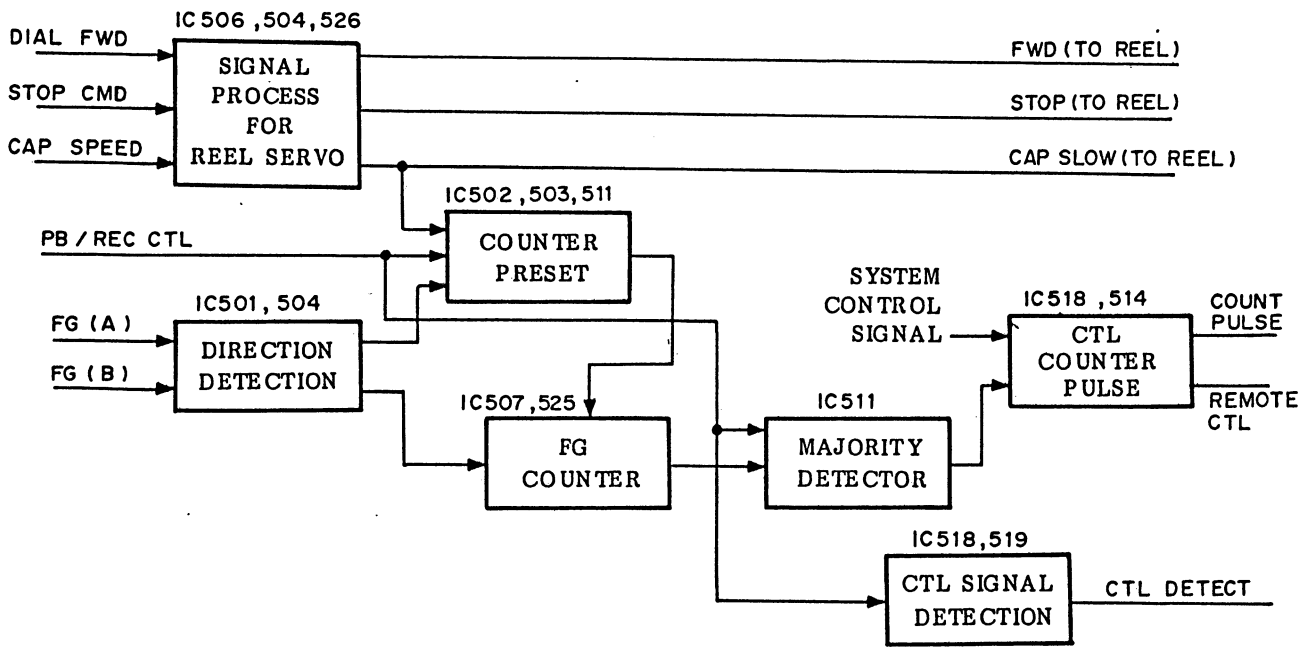

Fig. 4 Block Diagram

3-1. Signal Processing to be Used in Reel Servo Circuit

Capstan-related information that is required in the reel servo circuit is rotating direction signal (H:FWD direction), stop signal (H:STOP) and capstan slow speed (L:CAP SLOW) information.

IC526 is a Schmitt trigger that detects an analog speed signal (oV = Stop, -8V = 5 times tape speed in both FWD/REV) and generates a slow speed signal that is LOW=in less than 1/5 time tape speed. Output is L:CAP SLOW. (VTH = -0.3V)

Electronic switch IC512 sends the HIGH:DIAL FWD signal to the reel servo circuit as a "HIGH:FWD signal" as IC512 is energized by IC504, as long as a STOP command is issued by an operator or editing machine. The capstan's rotating direction output is not sent to the reel servo circuit as long as a STOP command is issued because the capstan's rotating direction output signal chatters between HIGH and LOW when the capstan is nearly stopped and is not suited (stop servo overshoot) to be used as a reference signal for the reel servo drive direction signal. In all modes except the STOP mode, IC504 pulls down electronic switch IC512 to the capstan's rotation direction signal end once the capstan starts rotating and generating FG.

Flip-flop IC506 generates the HIGH:CAPSTAN STOP signal to be sent to reel servo when the capstan rotating speed becomes less than 1/5 normal speed and the stop command is issued.

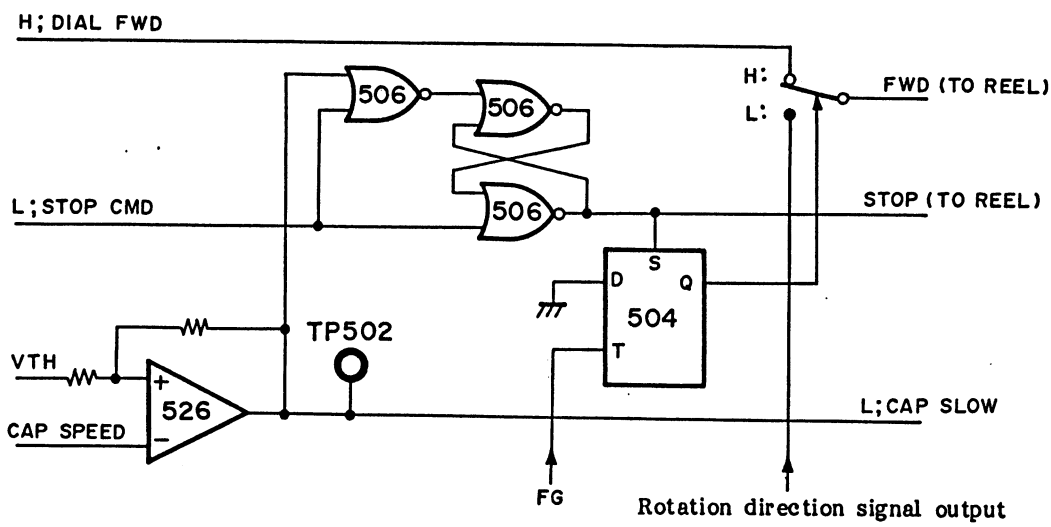

Fig. 5 Reel Servo Signal Processing

3-2. Rotation Direction Detector Circuit

An exclusive OR circuit in Fig. 6 generates a pulse from FG(B) signal's edge. An NAND gate then selects only the LOW portion of the FG(A) signal (T-pulse). The trailing edge of the T-pulse indicates FWD when the trailing edge is high or REV when the trailing edge is low. The relation of the T and $D(\overline{FG(B)}$ is also used in an FG counter.

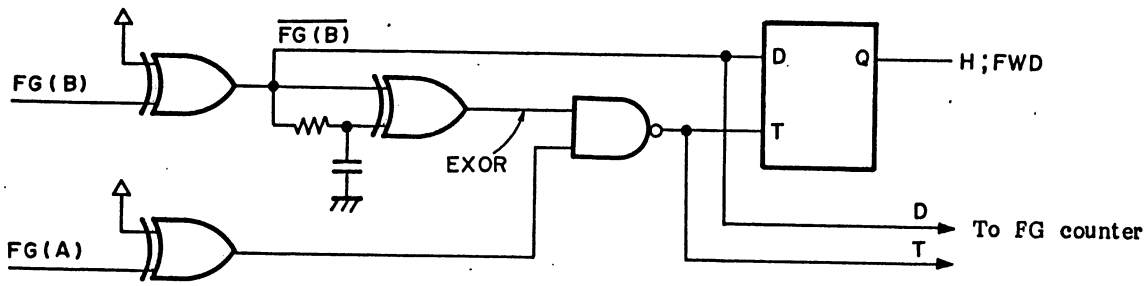

Fig. 6 Rotation Direction Detector

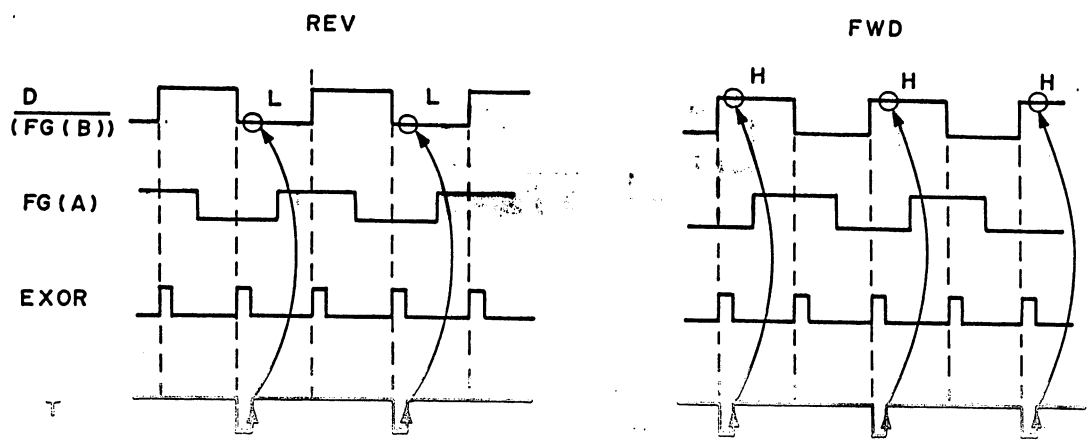

Fig. 7 Rotation Direction Detecting Timing

3-3. FG Counter

IC507 and its peripheral gates in Fig. 8 constitute the counter-1 circuit while its lower circuit constitutes counter-2. Each counter is a penta-decimal UP/DOWN counter. They are preset at the reference edge of the PB CTL signal (trailing edge in FWD) that presets the counter-1 to "3". Counter-1 outputs a pulse to CTR 1 OUT immediately when it counts up to 15, then sets itself to 0.

Counter-2 is preset to 11 by CTR 1 OUT so that it generates one output from C512 and R526 when it counts 15 pulses. The output of C512 and R526 is fed back to counter-2 so that it counts 16 inputs before resetting to zero (IC507 and IC525 are originally hexadecimal UP/DOWN counters). The leading edge of counter-2 output at TP505 exists within a range of one cycle of FG and preset pulse (CTL reference edge) as shown in Fig. 9.

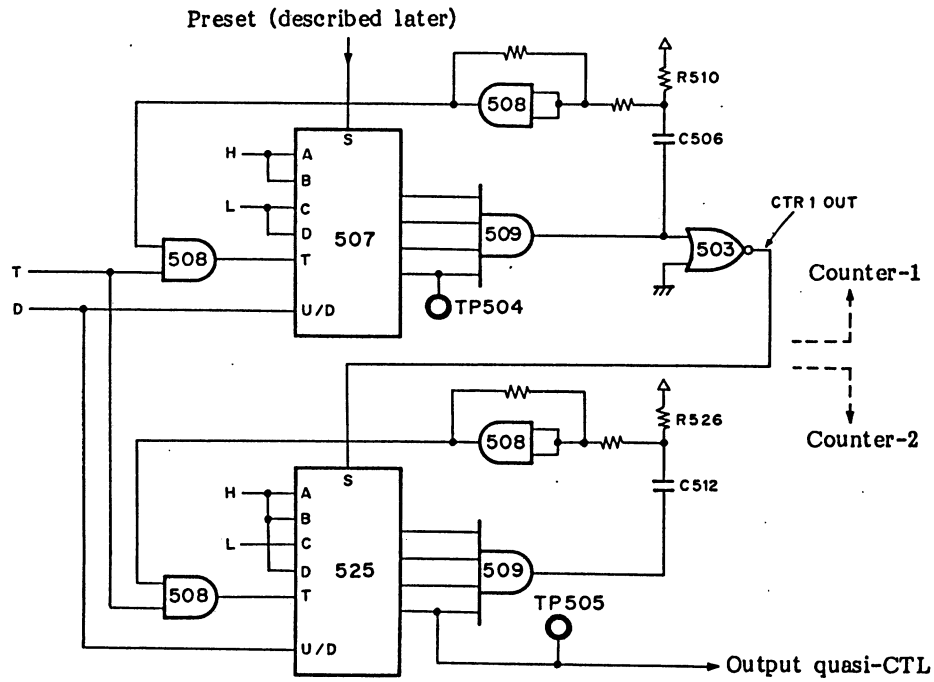

Fig. 8 FG Counter Circuit

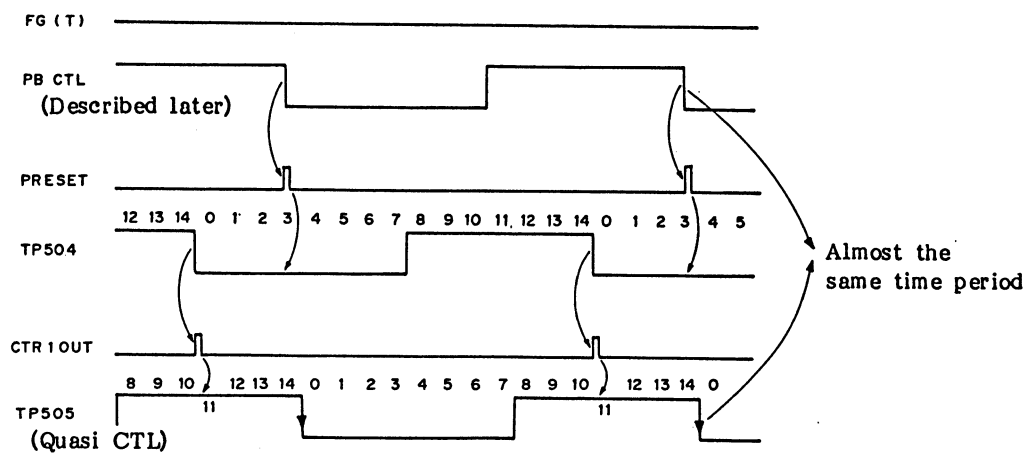

Fig. 9 Timing Chart

3-4. Counter Preset

The CTL signal amplifier may output chattering noise when the tape moves very slowly, stops, or reverses due to tape vibration.

The quasi-CTL signal that is prepared by FG counter circuit is used instead of the PB CTL. This quasi CTL is not preset by the PB CTL; it is sent to the system control cirlcuit as a CTL counting pulse. Use of the quasi-CTL reduces the CTL counting errors and improves editing accuracy.

The quasi CTL is the FG counter circuit output. Since it is generated from the capstan FG signal and is not preset by PB CTL, it is very close to an ideal CTL waveform regardless of capstan movement or tape vibration.

However, if the FG counter circuit is not reset by the PB CTL for a long period, between the quasi CTL and true PB CTL will be out of phase so that an editing point error or CTL count error will result. Therefore, the FG counter is preset at the reference edge of the PB CTL signal in the normal PB mode so that the quasi CTL will not be out of phase with PB CTL signal.

Fig. 10 shows the preset pulse generator that generates a preset pulse if the tape speed is less than 1/5 or higher than 1/5 the normal speed . If the tape speed remains at this value for more than seven seconds, a preset pulse is generated. The preset pulse is generated at the reference edge of the PB CTL signal (at the trailing edge in the forward direction and the leading edge in the reverse direction).

The PB CTL signal will have much noise due to tape vibration when the tape speed is sharply reduced from 1/5 or higher speed to sudden stop or reverse tape direction.

When the tape speed is higher than 1/5 or less than 1/5, the tape speed is maintained for more than seven seconds. At this time, the PB CTL signal recognizes that the tape speed is constant and stabilized.

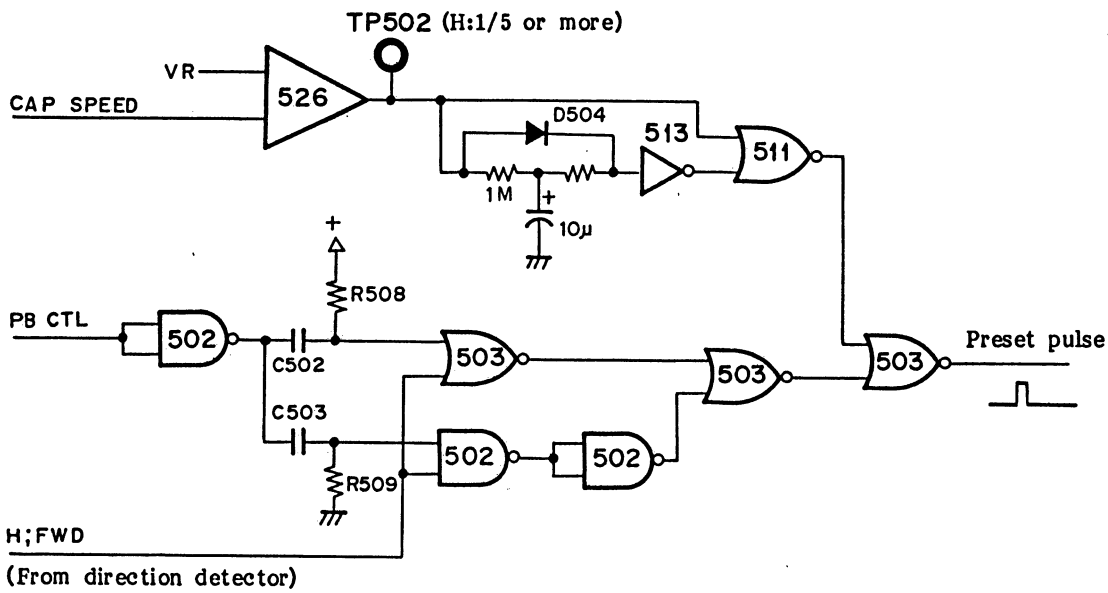

Fig. 10 Preset Circuit

3-5. Majority Circuit

The quasi CTL signal can be output even when the CTL signal is not recorded on the tape. The majority circuit removes noise from the PB CTL signal, but the quasi CTL signal should not be output when the tape has no recording.

Fig. 12 shows the majority circuit for quasi CTL and PB CTL signals where HIGH is output when both are HIGH, and LOW is output when both are LOW.

Electronic switch IC512 selects the PB CTL signal when the pinch roller is off because the tape to capstan relation will not correspond if the quasi CTL signal is output even though the tape does not run.

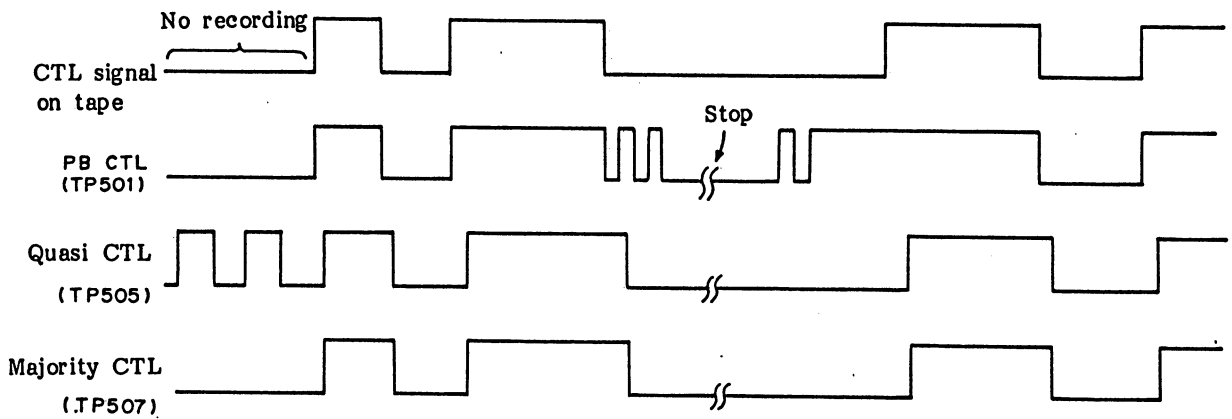

Fig. 11 Majority of CTL

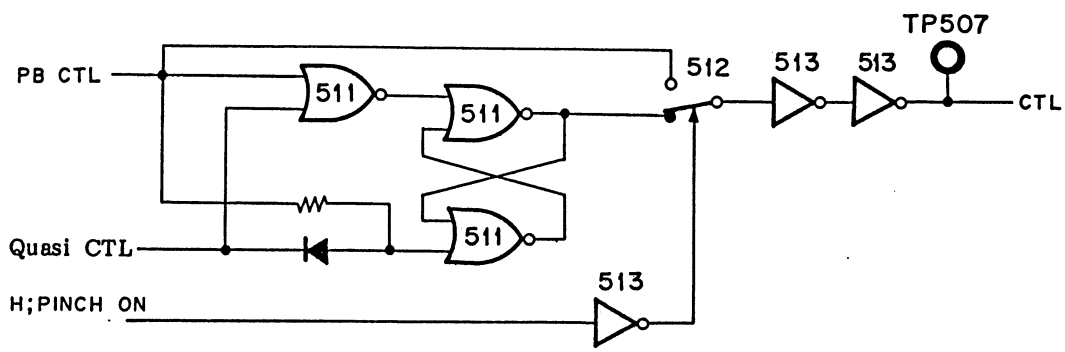

Fig. 12 Majority Circuit

3-6. CTL Counter Pulse Generator

Fig. 13 shows the CTL counter pulse generator that generates a pulse, at the reference edge of the CTL signal, which is sent to the system control circuit. The system control circuit starts counting this CTL signal and performs editing.

The CTL pulse is muted when the pinch roller is off and either the reel is stopped or standby is off, so that the signal to monostable multivibrator IC518C is input.

The CTL pulse is muted when the PB CTL signal is not expected because the tape has stopped.

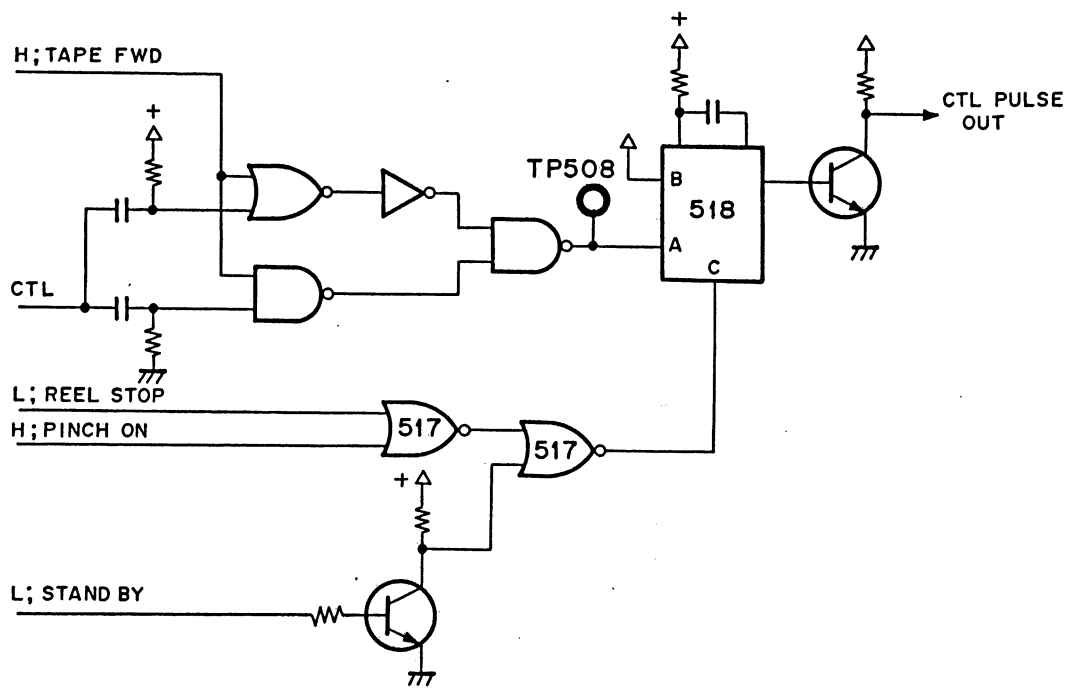

Fig. 13 CTL Pulse Circuit

COLOUR FRAMING (FOR PAL SYSTEM)

Principles

In the PAL system, the modulation carrier for the R-Y signal (V axis) inverts every line, causing a burst phase shift of 90 , line by line. Because the number of lines in one frame is odd (625), two frames are needed to form a complete cycle.

The normal framing circuitry detects only even or uneven fields. If editing is done with these two field sequences (as in previous machines), the colour phase may be discontinuous at the edit point, and picture colour may be lost for a moment. Fig. IV-1 shows how the burst on line seven of the third field is shifted with respect to the burst on line seven of the first field, although both fields are even. The colour framing circuitry on the CF-7 board overcomes this problem.

A word about the editing precision: because of the two frame sequences, the editing accuracy is within ±1 frame. If the colour framing circuitry is switched off, the editing accuracy can be better, but the colour might be lost at the editing point.

Note:

Sometimes an eight-field colour framing sequence is used (see Fig. 1). In this way, the continuity of the subcarrier phase at the edit point can be ensured.

(Equation) However, this 8-field sequence only has importance for a 1-inch VTR, because this VTR is often operated with a time-base corrector that uses SC-H timing to correct the 8-field sequence. The time-base correctors for U-matic machines operate on the horizontal sync so that the subcarrier phase is not important.

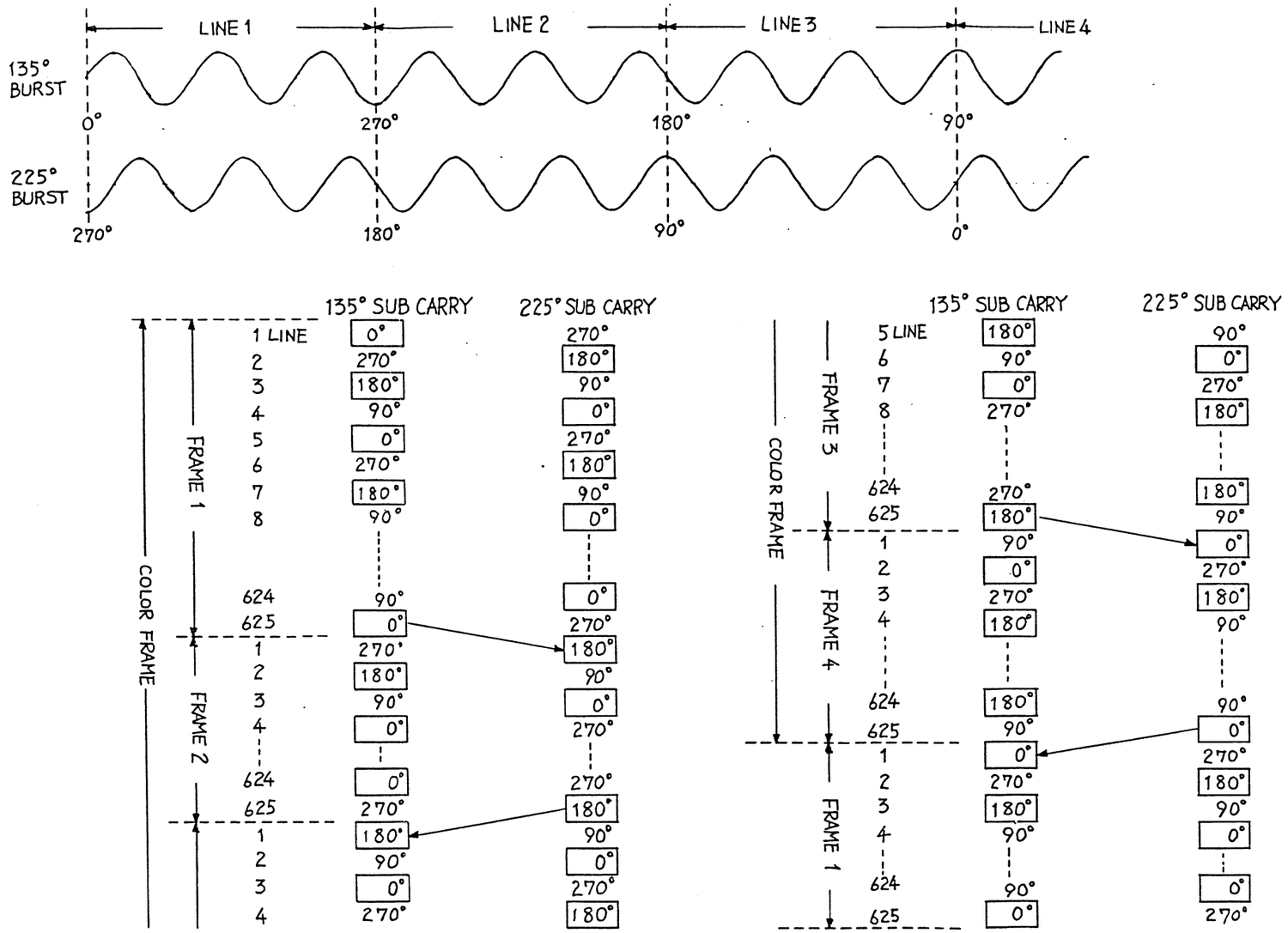

Fig. 1 PAL Signal 8 Field Sequence

The Colour Framing Board Block Diagram

The colour framing board is used in the auto edit mode and cooperates with the servo system. The board detects framing (H sync and V sync phase relation) and 4-field colour framing, and sends information to the servo system. In this manner, full synchronization between player and recorder can be obtained.

Basically, the colour framing board is composed of two blocks:

1. Time ing generator block
2. Colour framing block

Fig. 2 shows the system flow chart.

When the EDIT mode is pushed, the pause mode is released and the machine starts playing. 0.3sec after servo lock, the timing generator is enabled. This block consists of two analogue parts: part processes the PB sync, while the other one processes the reference sync. The following signals are generated:

- PB 3rd field (TP704)
- PB 1st field (TP703)
- PB even field (2/5 V shifted)
- Ref 3rd field (TP706)
- Ref 1st field (TP707)

The PB even field information is fed to the framing detector circuit which is enabled after another 0.3sec delay. H-V framing must be performed before detecting the colour framing condition. As the recorded tape, which will be used for the editing, might be recorded on a machine with the framing OFF, the framing condition must be checked and possibly corrected. The framing condition can be detected by comparing the shifted PB even signal with the PB CTL pulses. The shifted PB even signal is obtained at pin 2 of IC707 and is high during the even fields. However, because it is shifted over 2/5V, the signal is low at the beginning of an even field, and high at the beginning of an odd one.

In the framing mode, the CTL timing edge is located at the beginning of every even field. So, if the tape was recorded in the "framing ON" mode, the CTL timing edge must always coincide with the low level portion of the PB EVEN FIELD signal. If the tape was recorded in the non-framing mode, there is a 50% possibility that the CTL timing edge corresponds to the high level position of the PB EVEN FIELD signal. In this case, a high level is generated to indicate that the framing is wrong.

The colour framing detector circuit compares the PB field sequence to the reference field sequence (from the player). When both sequences are not synchronized, the colour framing is wrong and a high level is generated, which after 0.3sec delay is passed to the servo board (synch signal). The synch signal speeds up the recorder and when the two machines reach full synchronization, the stop detector resets IC723, and the synch signal is stopped. The machines are then ready for editing.

Fig. 3 shows the complete block diagram. The detailed time charts of the different blocks are shown in the next section.

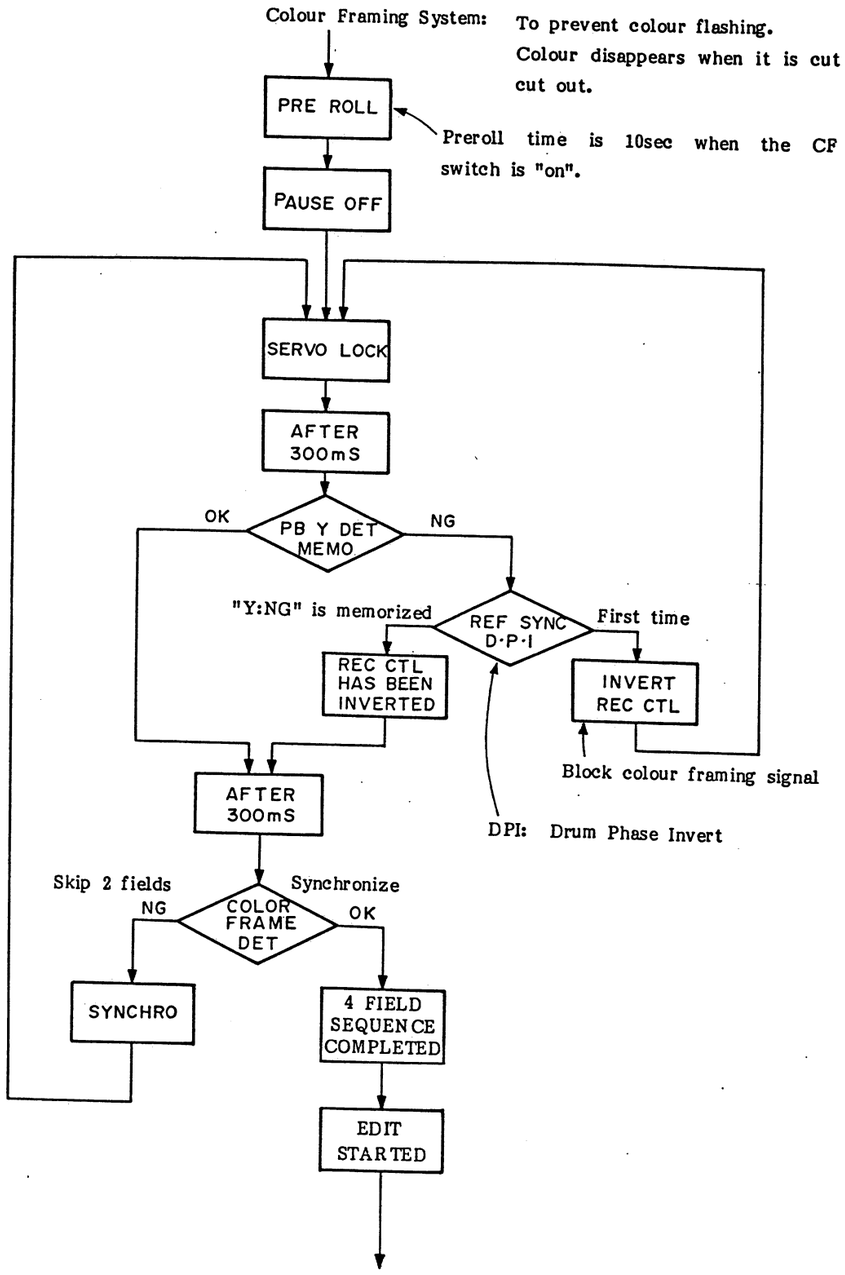

Fig. 2

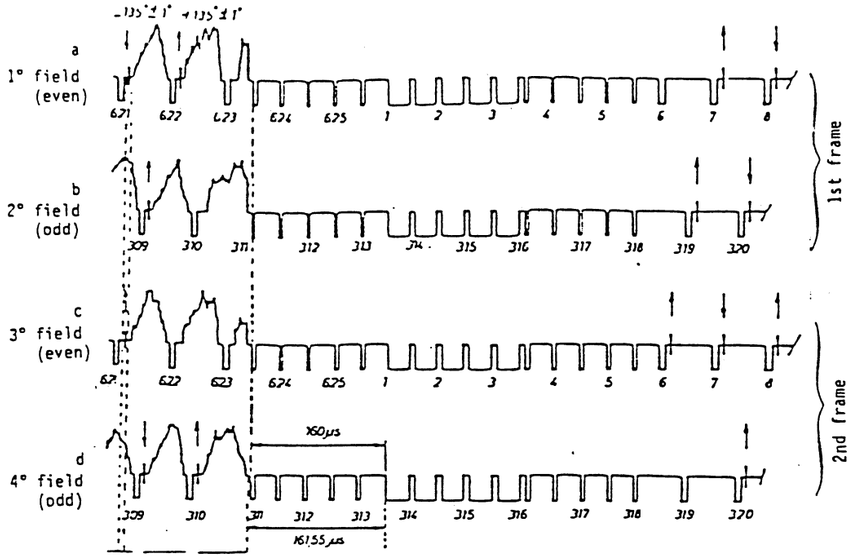

PAL Four Field Sequences

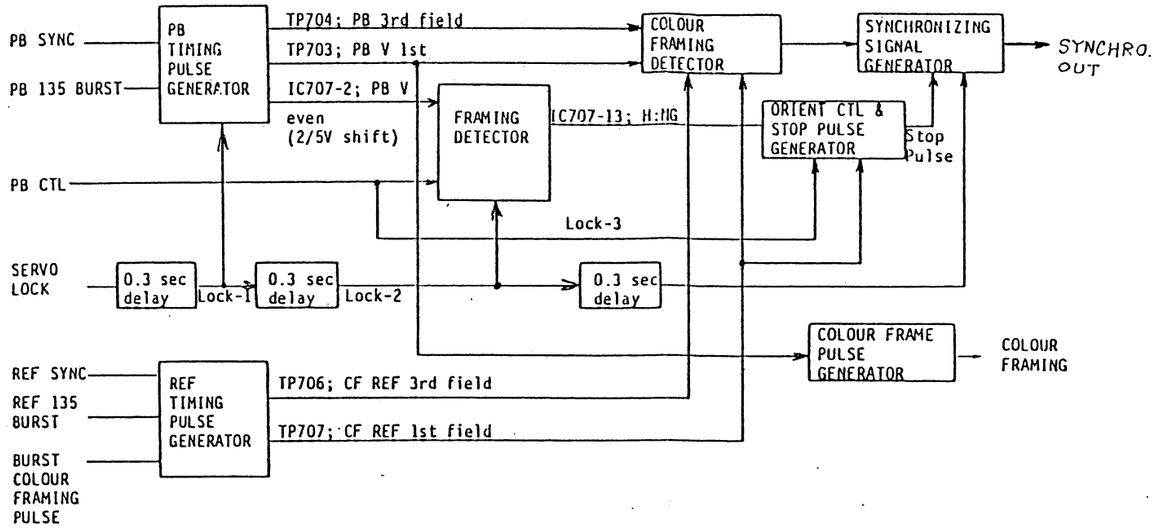

Fig. 3-a CF-9 Board Block Diagram

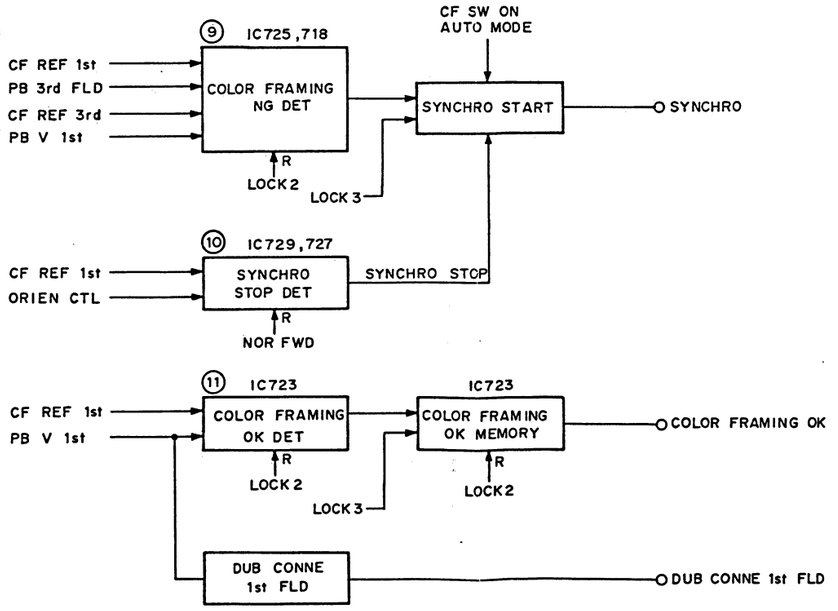

Fig. 3-c

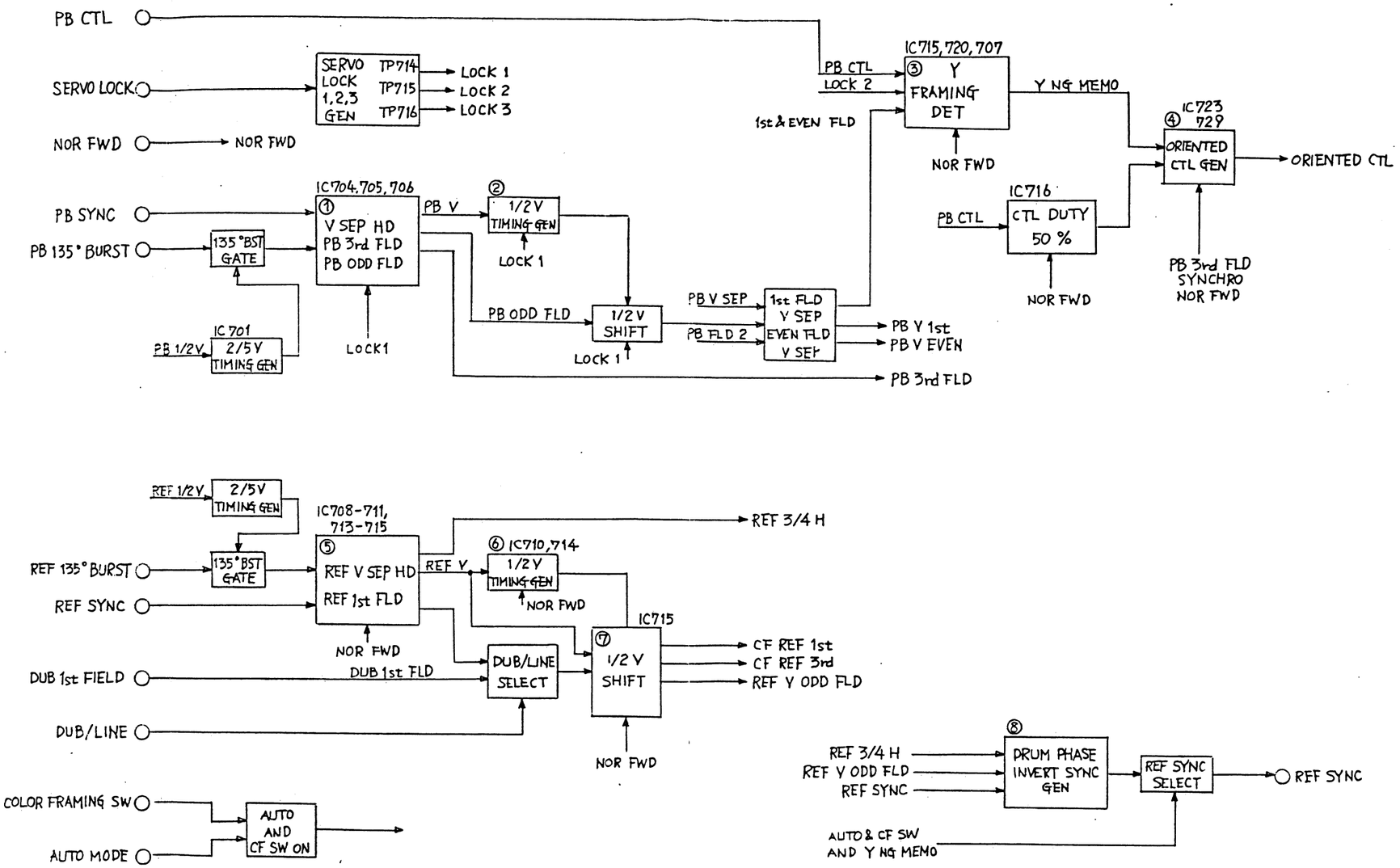
PB CTL
SERVO LOCK
NOR FWD
NOR FWD
SERVO LOCK 1,2,3 GEN
TP714
TP715
TP716
LOCK 1
LOCK 2
LOCK 3
PB SYNC
PB 135° BURST
135°BST GATE
IC704,705,706
① V SEP HD PB 3rd FLD PB ODD FLD
PB V
② 1/2V TIMING GEN
LOCK 1
IC 701
PB 1/2V
2/5V TIMING GEN
LOCK1
PB ODD FLD
1/2V SHIFT
LOCK 1
PB V SEP
PB FLD 2
1st FLD V SEP EVEN FLD V SEP
PB V 1st
PB V EVEN
PB 3rd FLD
PB CTL
LOCK 2
1st & EVEN FLD
IC715,720,707
③ Y FRAMING DET
NOR FWD
Y NG MEMO
IC716
PB CTL
CTL DUTY 50 %
NOR FWD
④ IC723 729
ORIENTED CTL GEN
ORIENTED CTL
PB 3rd FLD SYNCHRO NOR FWD
REF 1/2V
2/5V TIMING GEN
IC708-711, 713-715
REF 135° BURST
135°BST GATE
⑤ REF V SEP HD REF 1st FLD
REF SYNC
NOR FWD
REF V
⑥ IC710,714 1/2V TIMING GEN
NOR FWD
REF 3/4 H
IC715
DUB 1st FIELD
DUB 1st FLD
DUB/LINE SELECT
⑦ 1/2V SHIFT
CF REF 1st
CF REF 3rd
REF V ODD FLD
DUB/LINE
NOR FWD
COLOR FRAMING SW
AUTO MODE
AUTO AND CF SW ON
⑧
REF 3/4 H
REF V ODD FLD
REF SYNC
DRUM PHASE INVERT SYNC GEN
REF SYNC SELECT
REF SYNC
AUTO & CF SW AND Y NG MEMO

Fig. 3-b

3. CF-9 CIRCUIT DESCRIPTION

3-1. The PB Timer Block

H and V Sync Separation (IC704, 705)

Inverted sync is supplied to pin 12 of IC705 and pin 9 of IC704. IC705 is triggered by the horizontal sync. The output pulse width is approximately 3/4H. Vertical sync is obtained at IC704 pin 13 by triggering inverted sync by the inverted and shaped (1/4H) horizontal sync.

PB H/2 Sync (IC703, 704, 705)

The horizontal sync is supplied to IC704 pin 3. This IC is reset by the PB 135° burst signal. The output at pin 1 is high during the "-135° burst"
line and low at the "+135° burst".

PB Field Detection (IC703, 706, 707, 712)

Output 13 of IC706 is high during the 3rd and 4th fields. This is obtained by triggering the PB H/2 square wave by the vertical sync (IC704 pin 13). Output at pin 1 of IC706 is generated in a similar way and is high during the 2nd and 3rd fields. By "anding" these two waveforms in IC703, the third field is detected and the signal at TP704 is high during the 3rd field. The same two waveforms are applied to the EX-OR gate (IC712) and the output at pin 11 is high during the odd fields. This signal then is triggered by the 1/2V shaped vertical sync of IC716 pin 7. The signal at IC707 pin 1 is called even field signal and it is high at the beginning of every even field and at the end of every odd field. The inputs to AND gate IC720 are the "PB V sync", "PB even field" and the inverted "PB 2nd and 3rd field" signals. At the output (TP703) of the gate a pulse is generated at every beginning of a first field. At TP705, a pulse is generated at the beginning of every even field. All generated signals are shown in Fig. 4.

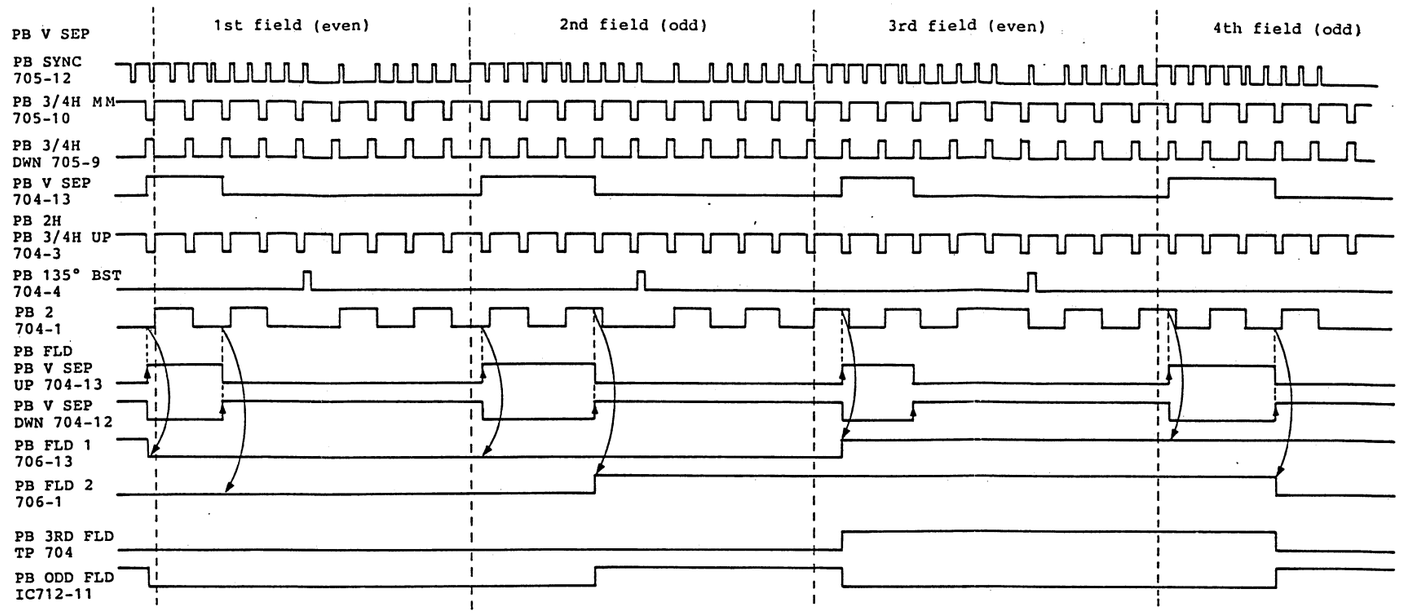

Fig. 4-a. PB Timer Block

3-2. The Reference Timer Block

The reference timer block is very similar to the PB timer block. The REF 3rd and REF 1st field signals are obtained at TP706 and TP707. These signals are shifted over half a field length: the 3rd field signal is high from half the 2nd field till half the 3rd field, while the 1st field signal is high from half the 4th field till half the 1st field. This is done by triggering the first field signal by the 1/2V shifted vertical sync and then delaying the signal over one field for the TP706 waveform and over 3 fields for the TP707 waveform. In the case of the dubbing mode, the reference 1st field signal comes directly from the player (colour framing pulse). This is because in the DUB mode, no REF 135° burst signal is available on the CF-9 board.

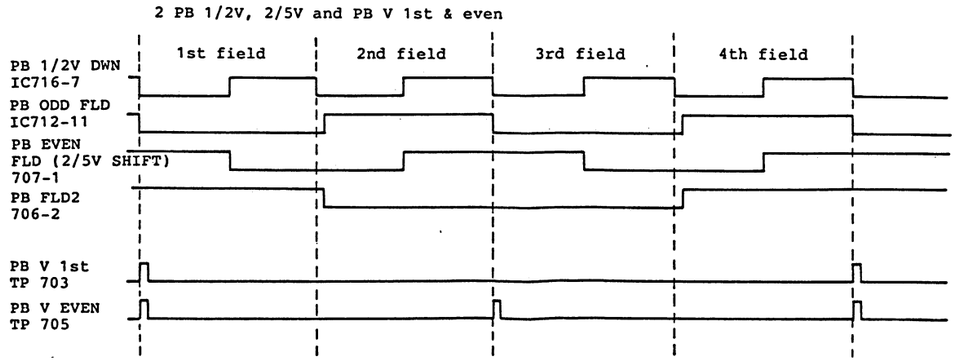

Fig. 4-b. PB Timer Block

3-3. Colour Framing Block

Synch Start

The "REF 1st field" signal at IC725 pin 5 is triggered by the "PB 3rd field" signal. If both sync signals are not synchronized, a PB 3rd field will coincide with a REF 1st field and a high level signal is generated at the Q output. Similarly, the REF 3rd field signal at IC725 pin 9 is triggered by the PB 1st field signal. Both output signals are mixed and the produced high level, indicating wrong colour framing, is checked four times, and then passed to the "synch start" IC. This IC is enabled at the servo lock three times, and a synch start signal is generated.

Synch Stop

The synch signal is ended when FF 723 is reset. The reset signal comes from IC727 pin 3.

To generate this "stop" signal, first "oriented" CTL pulses are produced. These pulses are a measure of the PB 1st field position during the synch mode. The PB CTL signal is shaped for a 50% duty cycle (IC716) and fed to the trigger input of the divide-by-two IC723 pin 3. However, this FF is reset at the beginning of every third field by the signal at pin 4 (PB 2nd field). The resulting oriented CTL pulses are shown in Fig. 7a.

To produce the final stop signal, the oriented CTL pulses, which correspond to the beginning of every PB 1st field, are compared to the REF 1st field signal. As soon as the CTL pulses correspond to the REF 1st field timing, a synch stop signal is generated. The remaining synch error can be corrected by the capstan ϕ^2 servo (see Fig. 7b).

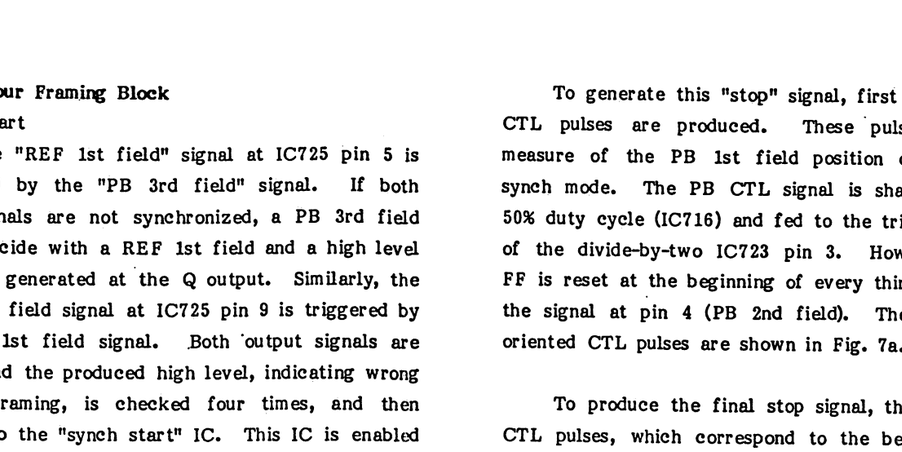

Fig. 5 Framing Detection

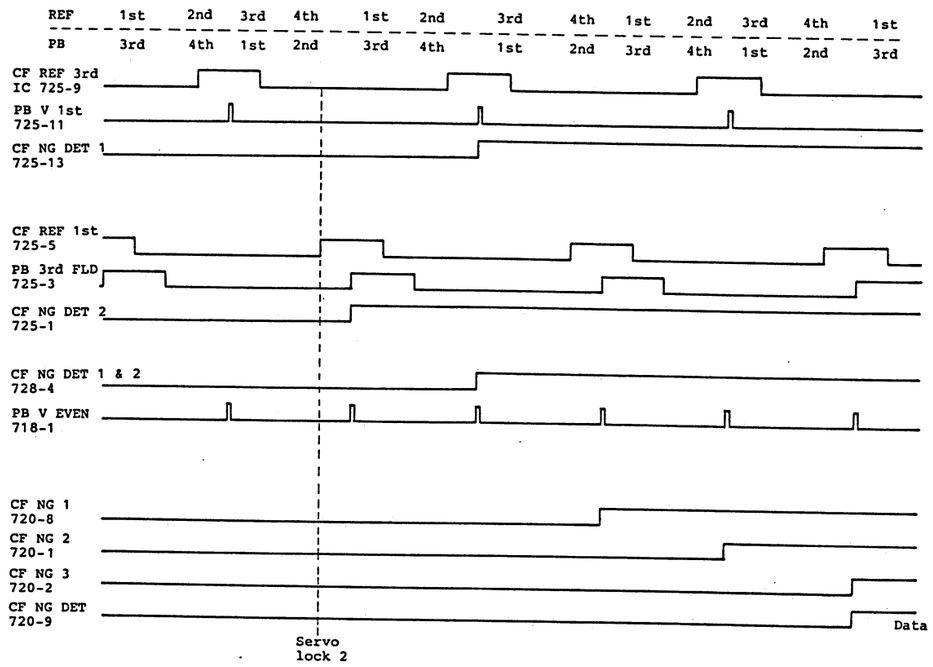

Fig. 6 Colour Framing NG Det and Synch Start

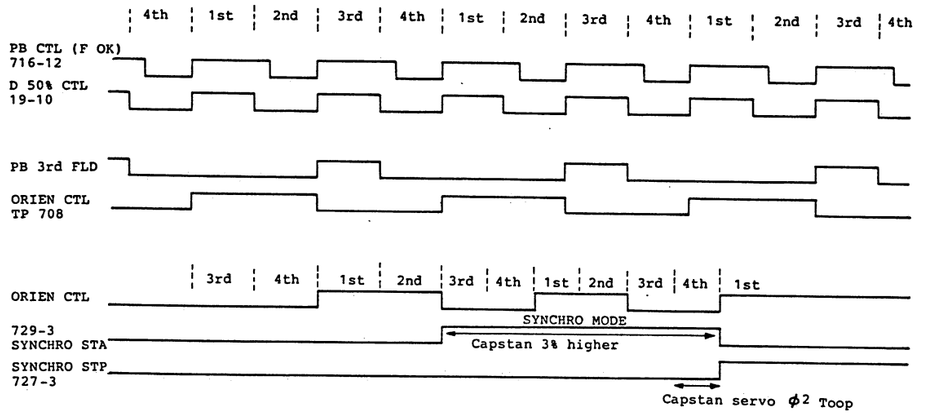

Fig. 7a and 7b

SECTION 7

SYSTEM CONTROL

SECTION 7
SYSTEM CONTROL

System Control

The system control circuit consists of the following blocks.

1. Function system control circuit (SY-36)
2. Microprocessor (SY-37)
3. Key input and display (KY-9)
4. Motors, solenoids, etc. (SY-71)

1. Function System Control Circuit (on the SY-36 Board)

The SY-36 block receives the function command signals that are generated by the keyboard and are input through the microprocessor on the SY-37 board.

The system control circuit on the SY-36 board receives the output signals from the following sensors;

Sensor output information - Condensation detector
Sensor output information - Drum rotation detector
Sensor output information - Thread end-1 detector
Sensor output information - Thread end-2 detector
Sensor output information - Unthread end detector
Sensor output information - Tape top/tape end detectors

These sensor output signals are input to the function system control circuit on the SY-36 board and then to the microprocessor (SY-37), and other circuits on the SV-71, RS-71, and SY-71 boards.

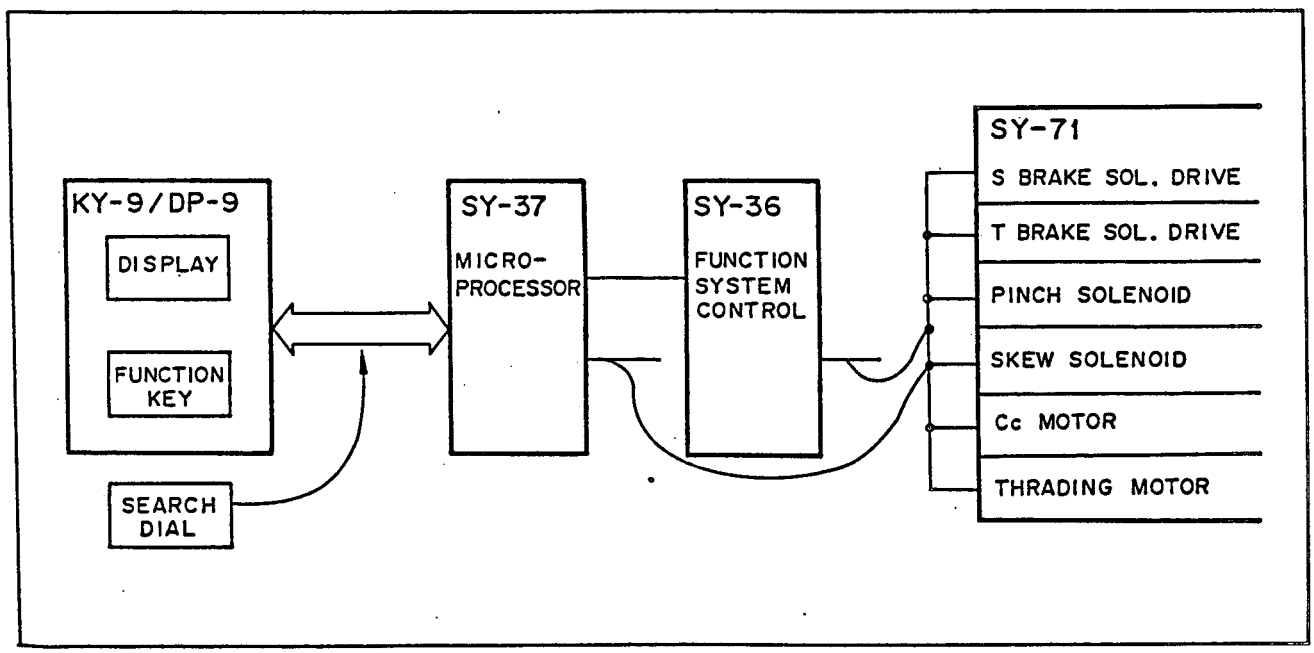

System Control Block Diagram

Circuit Description

1. When the power switch is turned on or off

When the power switch is turned on, the SY-71 generates the "H":POWER ON signal in the following sequence.

- +15V is input. — Charging integrator R45 (27K ohms)/C12(100uF/16V) — Q29 base potential increases to 0.7V 2 or 3 seconds after power on, and Q29 turns on. — Q29 collector and D39 cathode potential become 0V.

The H:POWER ON signal appears from +5V to R50/D39 only during 2 or 3 seconds after the power switch is turned on.

The H:POWER ON signal turns on Q28/on the SY-71 board which pulls down such signals as cassette up/down, threading/unthreading, pinch ON, T-brake and S-brake signals into low to prohibit their operation.

When the power switch is turned off, the 15V power line voltage decreases. — The Q30 emitter voltage (i.e., charge across electrolytic capacitor C13, 1000uF/6.3V,) is discharged through Q30 base, R51 and R49, and is also discharged through Q30 collector and D52. The voltage appearing at D52 generates the H:POWER ON signal for about 3 seconds to mute the motors and solenoid to prohibit their operation.

The H:POWER ON signal is sent to the SY-36 board where it is used to initialize flip-flops. It is sent to pin 9 of IC55 which outputs the servo enable signal ("L") to stop the capstan and drum motor rotation, and outputs the KEEP SOL signal ("L") at B16 to put the tension regulator into an electrical tension regulator.

The H:POWER ON signal is also sent to pin 5 of inverter IC54, then to pin 4 of IC53 putting IC53-2 high unless the unthread-end switch detects the unthread-end position indicating tape being wound around the drum. As soon as pin 2 of IC53 goes high it generates the following commands.

a) The SERVO ENABLE signal at B6 is set to "L" to stop capstan and drum rotation.
b) The T-BRAKE signal at B24 is set to "H" to release the take-up side brake.
c) Pin 6 of IC8 is set to "H" causing the reel servo circuit to start winding the tape on the take-up reel.
d) Pin 8 of IC52 is set to "L" to establish the EJECT mode.
e) Pin 8 of IC70 is set to "L" to set the A39 EMERGENCY signal into "L" which is in turn sent to SY- 37 board. The machine will then not be put into a desired mode even if a selected function key is pressed.

* In summary, when the power is switched on, the EJECT mode is established unless unthread- end is detected, and the tape is taken up by the take-up reel. Drum and capstan motors will not start rotation. Function key operations are neglected.

Pin 6 of IC54 sets IC20-4 to "L" and is connected to B13 to be sent to the reel servo. ("H" of this signal is 12V.)

2. Cassette lowering and threading/unthreading

The cassette compartment normally sends the following signals to the CASSETTE-IN (B29) and CASSETTE-DOWN (B31) terminals of the SY-36 board.

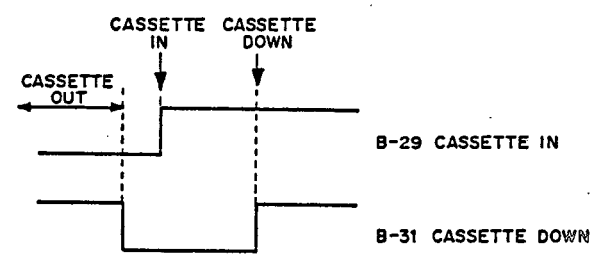

The above signals show that when a cassette tape is inserted, the cassette-down signal is pulled low, and the cassette-in signal is pulled high. Pins 3, 4 and 5 of IC52 go high setting IC47-2 "H", so

that the cassette-down signal ("H") at B18 is output to the SY-71 board that drives the cassette compartment motor in the cassette-lowering direction (described later in detail). The cassette will not start to lower immediately after the cassette-in signal goes "H" because the operator will feel that his hand is being drawn into the cassette compartment. The cassette-in signal is therefore delayed about 0.3 seconds by integrator R24/C9 before pin 5 of IC52 boes "H" so that the cassette compartment motor will not start rotation. When a cassette tape is inserted into the cassette compartment, the operator will feel a slight bump which is the machine's indication that the cassette tape has been firmly seated in the cassette compartment.

C119 prevents erroneous operation due to static electricity noise.

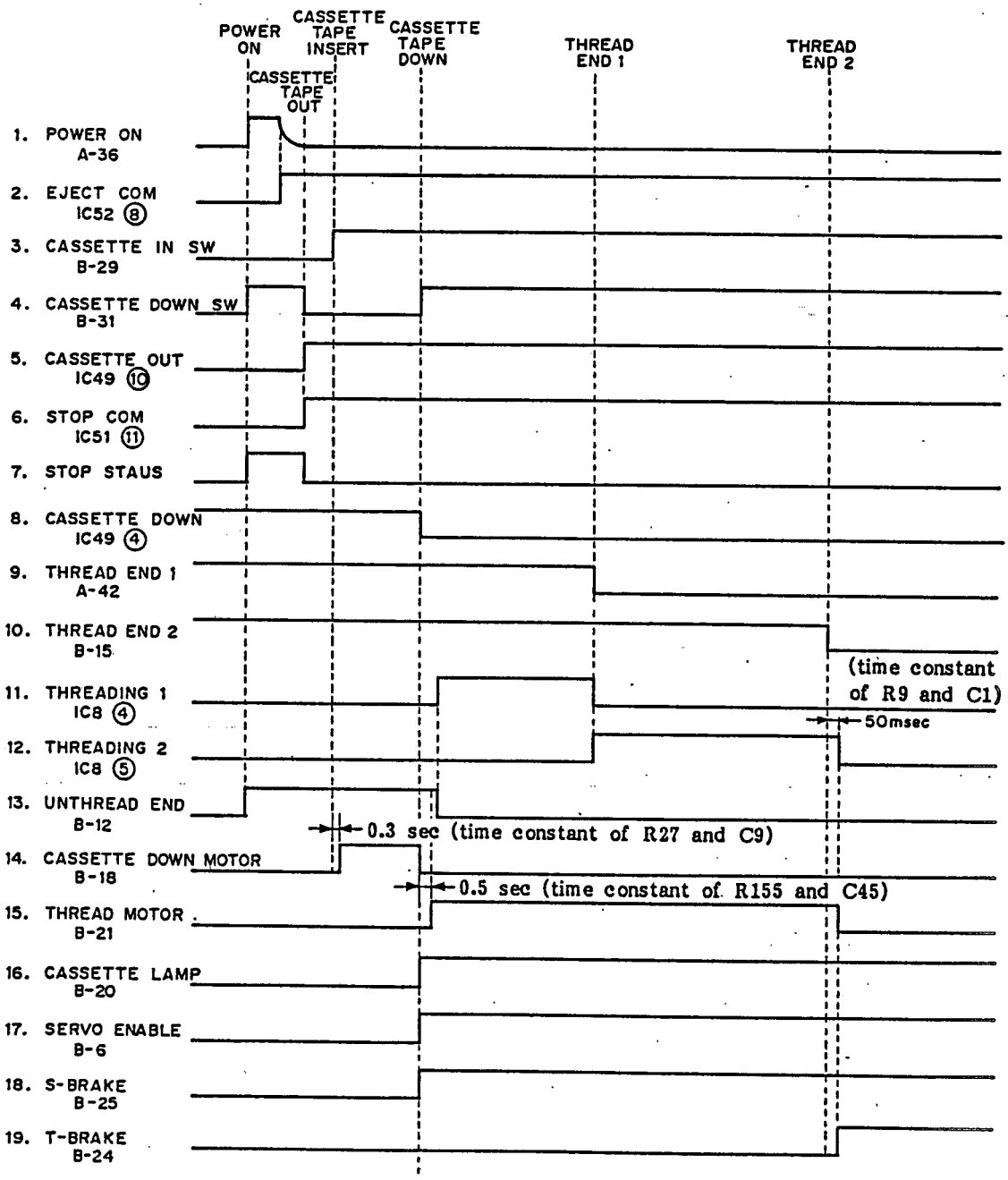

Fig. 1 When the power is turned on and cassette tape is inserted

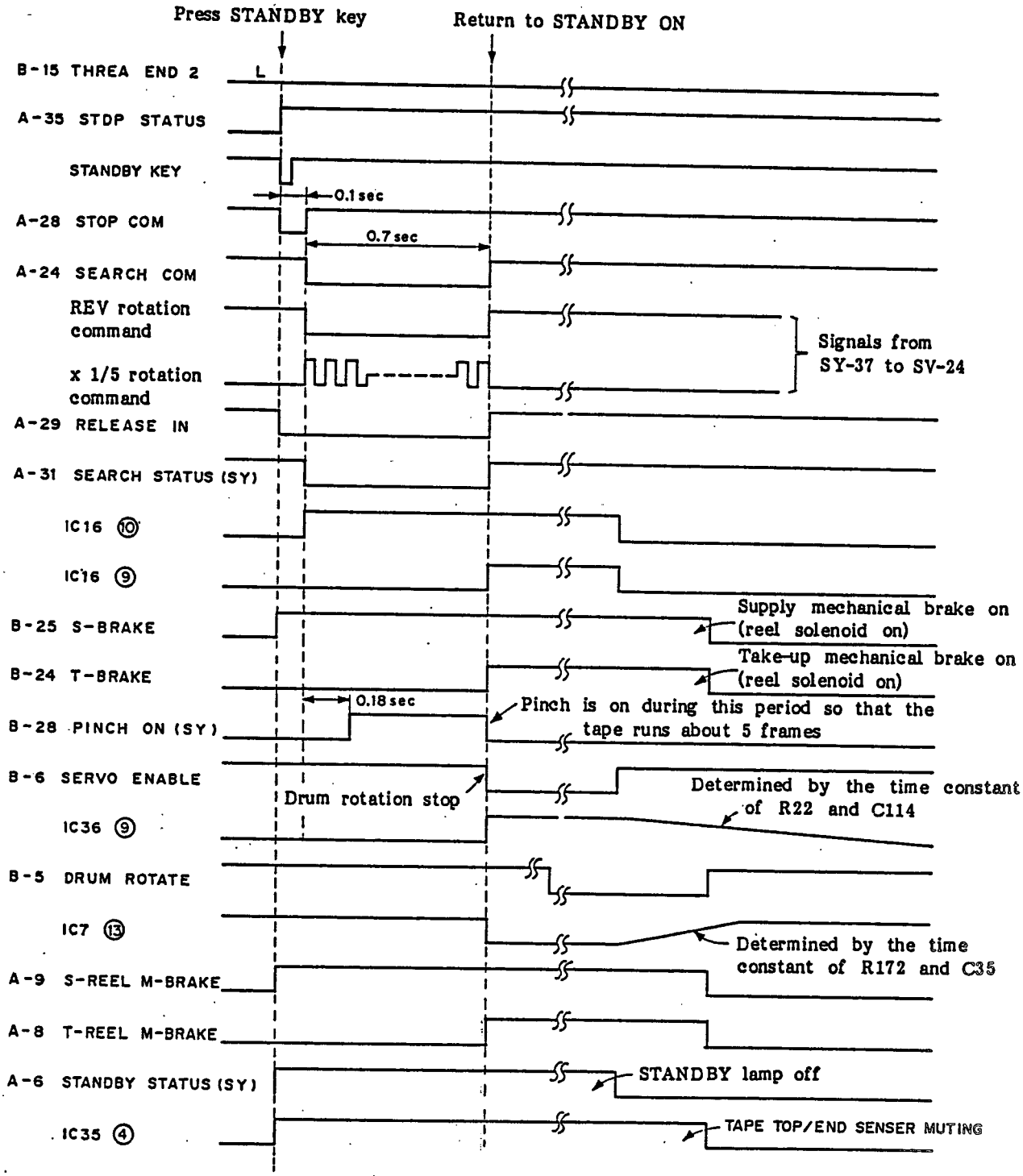

Fig. 3 STANDBY OFF

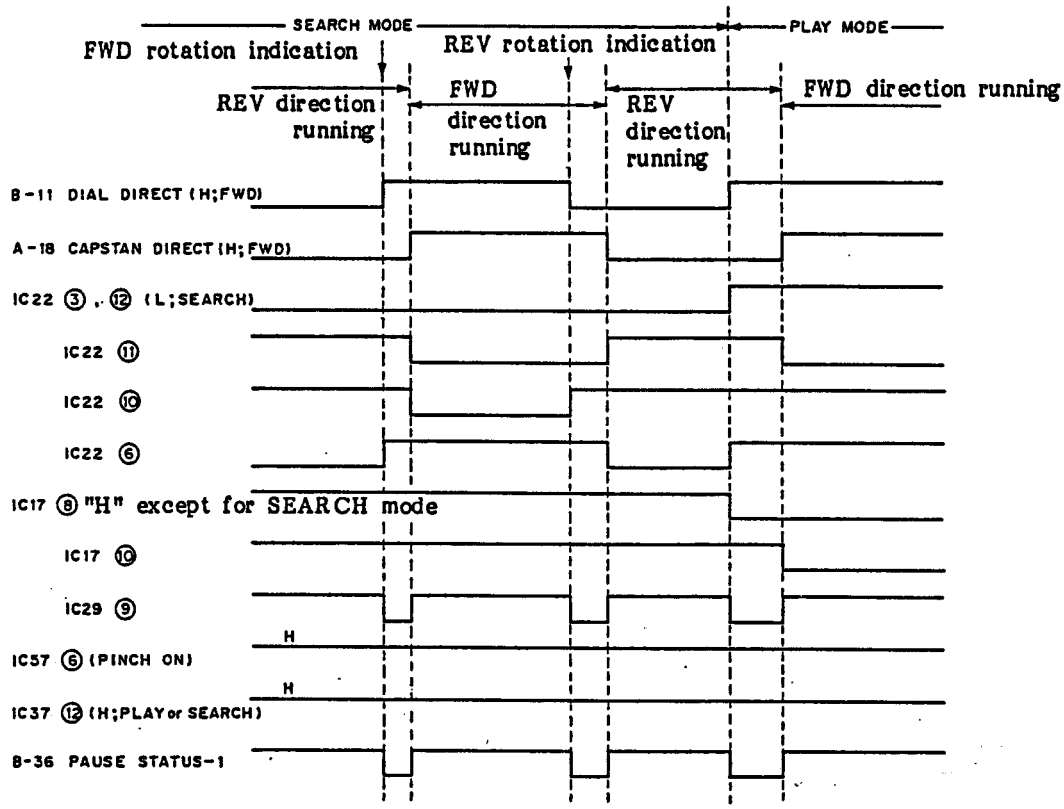

Fig. 6 SEARCH Mode

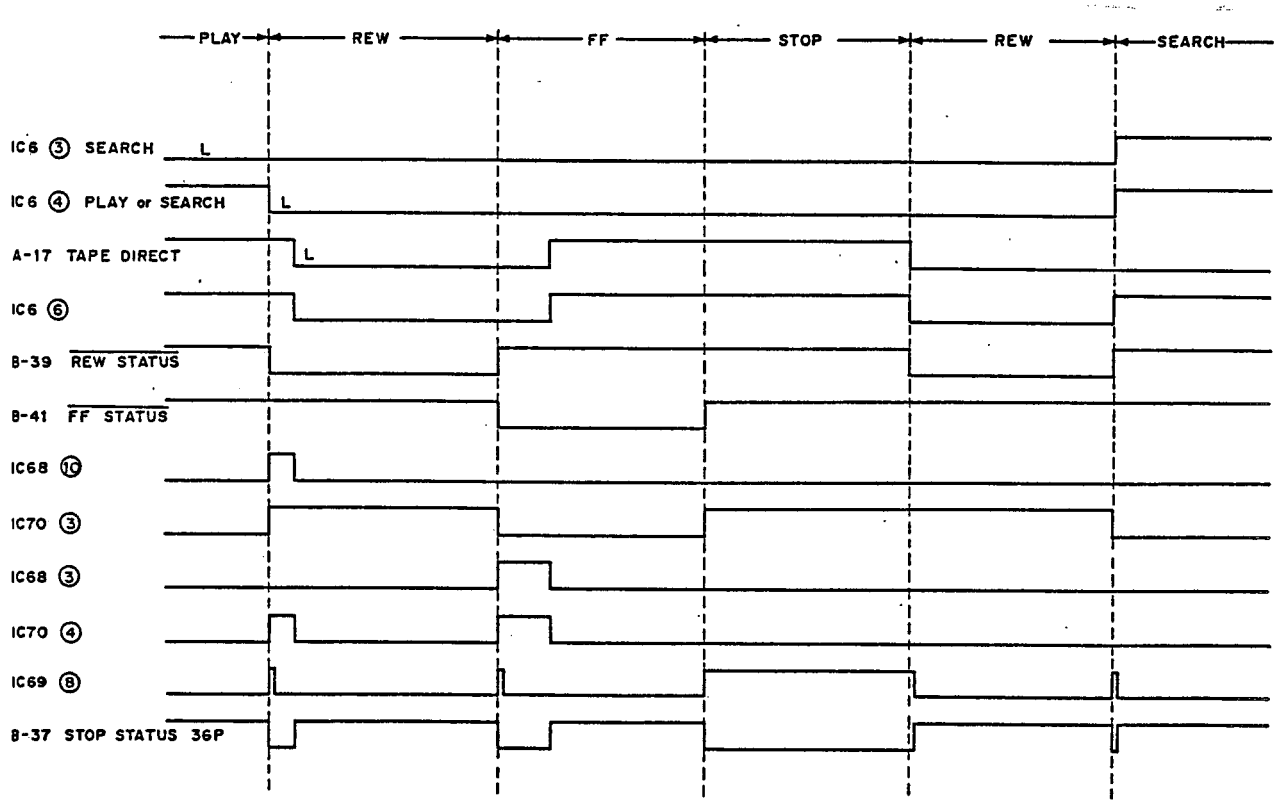

Fig. 7

- Threading ring initialization

  Even though the cassette compartment is still in the up position, if threading gear should move (it could happen while the machine is transported), the unthread end will not be detected, and the tape will be damaged because it will not be caught by the leading guide as the cassette is moved downward to the bottom. Cassette lowering is prohibited to prevent the above as follows. If the threading arm should move so that the unthread end is not detected, B12 unthread end goes "L" and pin 3 of IC70 goes "H." Even though the cassette tape is inserted (cassette-In position), pin 11 of IC70 is kept "H" because pin 4 of IC49 is high. Pin 3 of IC47 is consequently kept "L" prohibiting cassette lowering. Pin 11 of IC70 is connected to pin 3 of OR gate IC46. This OR gate sends the output unthread motor signal ("H") at B22 to the SY-71 board so that the threading motor is driven in the unthreading direction through the motor drive circuit until the threading gear is powered, and the threading arm is returned to the unthread end position. These circuits are energized as soon as the power is turned on even if a cassette tape is not inserted.

- If a cassette tape is removed while the motor is sending the tape into mechanism

  The cassette-in "H" signal charges C5 (0.3uF) through D5. If the cassette tape is removed in this condition, both B29 and B31 are "L" between the cassette-in and cassette-out positions so that pin 3 of IC48 is set to "H," pin 3 of IC49 to "L," and is sent to pin 2 of IC52 to establish the EJECT mode and raise the cassette compartment. R228(33K)/C122(0.47uF) are inserted between IC49-3 and IC52-2 for the following reason. If a cassette is inserted very slowly into the compartment, the cassette-in signal will not have a sharp waveform as shown on the previous page but will have chattering transients from L to H (because the photo-interruptor is used as a cassette compartment switch, and is used in delicate analog operating area for switching). This chattering alternates between L and H, Its L will put the machine into the EJECT mode and will eject the tape. R228 and C122 prevent this.

- Threading

When the cassette compartment descends to the bottom, both B29 and B31 are set to "H" and IC49-4 is set to "L." This output is sent to pin 6 of IC33 and fed to B25 S-BRAKE through IC12. This S-BRAKE signal is then sent to the SY-71 board which energiges the supply brake solenoid to release the supply brake and lower the cassette. The "H" at IC33-4 is sent to pin 5 of IC11 and pin 1 of IC18, and sets pin 15 of IC67(CX-757) (cassette-down) to "L" and pin 16 of IC16 to "H". Then, it sets the B21 THREAD MOTOR terminal to "H" through IC4-6, IC15, and IC19, so that the SY-71 starts the threading motor in the threading direction. This threading signal is delayed for approximately 0.3 seconds by integrator R155(1M ohm)/C45(0.47uF). This 0.3-second delay is not necessary in normal threading operation, but is needed when threading is attempted during EJECT mode, so the tape does not become slack due to reel servo response time.

When threading is initiated, this information should be sent to the reel servo circuit. As soon as the mechanism starts threading, the threading arm is moved from the unthread end position into the V-shaped guide mechanism. This period of mechanical operation is called the "THREADING-1" mode. After threading-1 is completed, threading will continue to move the threading ring until the tape is wound around the drum. When the tape is completely wound around the drum, threading is completed. This mechanical operation from the V-shaped guide until completion of threading is called the "THREADING-2" mode.

Before threading starts, IC58-4 should send a signal to pin 12 of IC66 ("H" during EJECT) indicating that the mode is not the EJECT mode. This signal is sent to pin 3 of IC54 ("H") and to pin 5 of IC52 ("H" until the THREAD-1 end is detected). IC52-5 also receives "H" from pin 11 of IC34 because UNTHREAD END terminal B12 becomes "L" when the threading arm leaves the unthread-end position, setting IC34-11 and IC58-6 "H." Pin 5 of IC52 is sent to pin 4 of IC8 as the "THREADING-1" signal, then multiplexed and sent from A11 as the RS MULTI-2 signal to the reel servo circuit board.

When the threading arm enters the V-shaped guide, A42 is set to "L", so the THREADING-1 signal goes "L." As soon as the THREAD-1 end is detected, output at pin 2 of inverter IC55 goes "H" and sent to the reel servo circuit after being multiplexed by IC8-2.

When the threading arm enters the V-shaped guide, since pins 2 and 1 of IC58 are "H" and B15 THREAD-2 end is "H," output at pin 9 of IC58 goes "H" and sent to IC19-1 and IC8-5 where the signal is multiplexed and sent to the reel servo circuits.

When the threading arm enters the V-shaped guide, A42 is set to "L," setting the THREADING-2 signal to "L." When THREAD-1 end is detected, pin 2 of inverter IC55 is set to "H" and sent to pin 2 of IC8, then multiplexed and sent to the reel servo circuit.

When the threading arm enters the V-shaped guide, since pins 2 and 1 of IC58 are "H" and B15 THREADING-2 end is also "H," output at pin 9 of IC58 output is set to "H" and sent through IC19-1 and IC8-5, multiplexed, and sent to the reel servo circuit.

After B15 THREAD-2 end is set to "L," the THREADING-2 signal goes "L" and is inverted at pin 5 of inverter IC73 go "H" which makes IC67-16 "L", so that the THREADING signal will no longer be output.

As long as the THREAD-2 end is detected, the the high signal at pin 3 of IC8, treated as the THREADING-2 END signal, is multiplexed and sent to the reel servo circuit. Output at pin 5 of IC56 is set to "L" for the A34 THREADING-2 END signal and sent to THE SY-37 board.

After the THREAD-2 end is detected, output at pin 12 of IC32 goes "L" and is sent through IC18-13 and IC19-5, and appears as the B24 T-BRAKE "H" signal which is sent to the SY-71 board and releases the take-up brake solenoid. The THREADING-2 end signal is delayed in SY-36 for about 50msec by integrator R9/C1, so that the threading mechanism is firmly engaged in the THREAD-2 END mechanical position.

- When the threading arm enters the V-shaped guide, and both the tape top and tape end are simultaneously detected

  This may accidentally happen when the transparent leader tape is in front of both the tape top sonsor and the tape end sensor. The leader tape must not contact the video head because the adhesive agent, used to attach the magnetic tape and leader tape, or foreign materials on the leader tape can clog the video head. If a cassette of fully-wound tape is used for threading, the leader tape can come out of the cassette so that both the tape top and tape end sensors will detect the leader tape at the THREAD-1 end timing.

  When the THREAD-1 end is detected, C29(0.047uF)/ R125(1M ohm) generate a differentiated high level pulse that is sent to pin 9 of IC31. When both the tape top and tape end are detected, outputs at pins 4 and 5 of IC29 are set to "L" and sent to pin 8 of IC31 here this signal and the differentiated high pulse are sent to an AND gate. The AND gate output is then sent to pin 14 of flip-flop IC53 to set output at pin 1 of IC53 to "H." As long as the tape top and tape end are detected, pins 11, 12 and 13 of IC74 are low, setting IC17-3 to high. During THREAD-1 end, outputs at pins 12 and 13 of IC40 are high, setting IC17-3 and IC2-1 to high, and are multiplexed and sent to the reel servo circuit where the machine is put into the Fast Forward (FF) mode in this THREAD-1 end position.

During the short FF, the tape end is no longer detected so pins 11, 12 and 13 of IC19 are all set to high to keep IC26 (FF)-1 and IC17-3 high until the short FF is continued. After both the tape top and tape end are no longer detected, pins 3, 4 and 5 of IC29 are set to high, setting IC53-15 to high and IC53-1 to low. But the short FF continues until capacitor C30 is recharged through R129, so pin 1 of IC26 is set to high. After C30 has charged, pin 1 of IC26 is reset to terminate the short FF. The C30 charge/discharge time constant is selected to be two to four seconds to allow a sufficient tape to move onto the take-up reel so that the tape top is not detected during threading.

If either the tape top or tape end is detected during THREAD-1 end, pin 1 of IC53 is set to high, setting IC26-2 to high and IC8-5, that is a THREADING-2 signal, to low. Pin 13 of IC32 is also set to low, setting IC19-6 output, that is a B24 T-BRAKE signal, to high and sending it to the SY-71 board that releases the take-up side solenoid.

After both the tape top and tape end are no longer detected, pin 1 of IC53 is set to low, while C30 is fully charged, and TC61-12 is set to low. R130 and C31 differentiates the pulse, and sets IC32-4 to high, setting IC26-2 to low again, which sets the T-BRAKE signal to low and energizes the take-up solenoid again. The differentiated pulse (with pulse width of 0.5 sec to 1.5 sec) sets B-25 to low during this period, stopping the reel. As soon as pin 2 of IC26 is set to low and pin 10 of inverter IC54 is set to low again, IC8-5 (THREADING-2 signal) is set to high so that threading takes place. (If IC26-2 remains high, the cassette-down signal at pin 15 of IC67 is kept high at pin 2 of IC18, the machine detects that the cassette has not yet reached the down position, and the THREADING signal at pin 16 of IC67 is kept low to stop threading.)

If the tape top and end are detected simultaneously at the very end of the tape top, a short FF solves the problem as described in the previous circuit operation. But if both the tape top and end are detected simultaneously at the very end of the tape end, the short FF is attempted in the same manner by turning the reel motor in the FF direction, but the tape tension detector senses excessive tension so the reel servo circuit sends the tape protect LOW signal to A-13 to set IC17-13 to low and IC53-9 high, and IC52-8 to low to set up the EJECT mode to eject the cassette tape from the machine.

The KCS type cassette has a device to distinguish the tape top from the tape end. This type of trouble will not happen in the KCS cassette. When the tape end is detected at THREADING-1 end position

When the tape end is detected, pins 8 and 9 of IC33 go low, setting IC26-10 and IC2-6 to high, that is multiplexed and sent to the reel servo circuit. The R180/C51 time constant prevents tape slack during short REW mode. The short rewind then continues until tape end is no longer detected.

- When the tape end is detected after THREADING-2 has started

When the tape end is detected during THREADING-2, pins 11, 12 and 13 of IC5 go high to keep IC16-2 high, IC19-2 low, and IC8-5 low which prevents the THREADING-2 signal from flowing to the reel. The B-21 threading motor is set to lOW to stop threading. pin 6 of 46 also goes high to set the IC8-7 UNTHREADING-(S) output to high which is then sent to the reel servo circuit.

The B-22 UNTHREAD MOTOR terminal is also set to high, starting the unthreading. As the unthreading proceeds, the THREAD-1 END terminal is set to high, setting IC21-1 to high and finally resetting IC16-2 to low. The output at pin 1 of IC16 was already set to high when IC16-2 was set to high, and IC29-3 is set to low. If pin 2 of IC16 is reset to low in this condition, threading takes place again into THREAD-1 END, setting IC53-1 to high. IC6-8 is set to high to start a short rewind. The short rewind length is determined by the R153/C44 time constant (4 sec to 5 sec). After this period has elapsed, IC16-1 is reset, stopping the short rewind so that the tape is stopped by supply and take-up brakes, and starts threading again. As pin 1 of IC16 is set to low, this edge is differentiated by R152 and C43, and its output pulse charges C30 immediately. This pulse lasts 0.2 sec to 0.3 sec.

3. EJECT

When the EJECT key is pressed (fundamental operation)

When the EJECT key is pressed, the LOW EJECT COM signal is sent from A-27 on the SY-37 board This signal is sent through IC52-1 to IC60-2 to pin 17 of IC66 to keep IC67-8 low. This signal is also sent from IC66-12 (HIGH) to IC56-5, and to the A-34 terminal as the EJECT STATUS (SY) signal and is finally sent to the SY-87 board that lights the EJECT lamp. This signal sets the output at pin 17 of CX-757 to high which is then sent to pin 12 of IC9 through IC40-4 to IC46-2. It is delayed by R161/C46 and appears at pin 12 of IC9, then at B22 as the UNTHREAD MOTOR output signal. This signal is sent to the SY-71 board where the motor is rotated in the unthreading direction. R161/C46 provides about 03 seconds delay time. This unthreading signal is also sent to the reel servo RS-3 board as a multiplexed signal so that the reels send the tape in the unthreading direction. As the unthreading starts, the THREAD-2 END is no longer detected so B22 is set to low, and the brake is engaged on the take-up reel. As the threading proceeds, the UNTHREAD-2 END is detected setting B12 to high, IC40-3 to low, and finally the UNTHREAD MOTOR signal to low to stop motor rotation.

Even though the UNTHREAD END is detected, EJECT COM signal is sent from A-27 on the SY-37 board This signal is sent through IC52-1 to IC60-2 to pin 17 of IC66 to keep IC67-8 low. This signal is also sent from IC66-12 (HIGH) to IC56-5, and to the A-34 terminal as the EJECT STATUS (SY) signal and is finally sent to the SY-87 board that lights the EJECT lamp. This signal sets the output at pin 17 of CX-757 to high which is then sent to pin 12 of IC9 through IC40-4 to IC46-2. It is delayed by R161/C46 and appears at pin 12 of IC9, then at B22 as the UNTHREAD MOTOR output signal. This signal is sent to the SY-71 board where the motor is rotated in the unthreading direction. R161/C46 provides about 03 seconds delay time. This unthreading signal is also

sent to the reel servo RS-3 board as a multiplexed signal so that the reels send the tape in the unthreading direction. As the unthreading starts, the THREAD-2 END is no longer detected so B22 is set to low, and the brake is engaged on the take-up reel. As the threading proceeds, the UNTHREAD-2 END is detected setting B12 to high, IC40-3 to low, and finally the UNTHREAD MOTOR signal to low to stop motor rotation.

Even though the UNTHREAD END is detected, the threading arm should be located in the disired position, but the tape may not be fully wound onto the reel and has some slack. R61/C13 provides about 0.5 seconds deley time that delays IC8-2 about 0.5 seconds, so the reel motor will wind the tape fully onto the reel.

After another 0.8 second delay, B19 is set to high so that IC45-8 is set to start rotating the motor in the cassette up direction. The 0.8 second delay is selected for the reel motor to stop its rotation due to inertia, and is provided by R63 and C14. As soon as both B29 and B31 are no longer high, B6 goes low so that both the drum motor and the capstan motor stop. B20 is also set to low to turn off the cassette lamp.

As the "cassette-up" motion proceeds, the B29 terminal is set to low, the B31 terminal to high, and IC49-10 to low, to set IC51-11, IC60-3, IC66-18, and IC67-8 to low so that the STOP mode is established. pin 1 of IC45 is at the same time set to low because there is no EJECT signal to stop motor rotation.

After the cassette is completely ejected, the STOP lamp is turned off even though the machine is in the STOP mode, because the machine seems to be in the STOP mode while the tape is still wound around the head drum. Therefore, IC49-10 is connected to IC9-9 to set the A35 STOP STATUS to high and turn off the STOP lamp.

If the CASSETTE OUT should not be detected after five seconds have elapsed since the CASSETTE-UP signal went high, the machine detects that some trouble have happened in either the cassette-up mechanism or in its electronics, so that the cassette is again lowered and starts threading in the STOP mode. The five seconds are determined as follows.

When PIN (OF IC45 is set to high to start cassette-up, output at pin 4 of IC55 goes low and delayed by R74 and C16 for 5 to 10 seconds, then sent to pin 5 of IC69. If the cassette compartment is set correctly, output at pin 6 of IC69 goes low, that puts IC69-4 to low, and is sent to pin 5 of IC51 to establish the STOP mode.

When the cassette compartment is connected electronically, the cassette compartment signal at B30 should be high. If a special circumstance such as maintenance check or repair is attempted when the machine is operated after the cassette compartment is removed, the B30 terminal should be set to lows. If B30 is not set to low, machine goes into the EJECT mode up to the unthread end, waits 5 to 10 seconds, then enters the STOP mode to start threading again.

The function of IC48-5/-6/-7 is to stop the cassette-down motor rotation when the EJECT key is pressed during cassette-down, so that the machine is put into the EJECT mode.

When the eject command is given while the machine is in the PB mode, the reel servo system selects the electric tape tension servo by energizing a "keep solenoid," even though the mechanical tape tension servo is used in the PB mode. If the tape is ejected while the mechanical tension servo is still in use, tape slack will occur during unthreading, resulting in tape damage. Therefore, when the machine is put into the EJECT mode from the PB mode, current is caused to flow through the keep solenoid for about five seconds. IC11-12 is high in the PB mode, so that C10 is charged. When the EJECT key is pressed, C10 discharges through R50. This discharging period of about five seconds is when the keep solenoid is receiving current.

4. STANDBY (36-pin)

This signal is sent to BVE-500, BVE-800 or BVR-510, and is low from cassette insertion until the Thread-2 End is detected (or from Thread-2 End until cassette insertion). IC67-16 (Threading Out), IC67-17 (Unthreading Out), B18 (Cassette-down motor), and B19 (Cassette-up motor) outputs are fed to pins 13, 12 and 11 of IC35. Its output is sent through pin 2 of IC20 to B38 as the STANDBY signal.

5. PLAY MODE

When the PLAY command is sent from the SY-37 board to A37, IC66-13 and IC67-12 are kept low, and output at pin 8 of IC68 (FWD OUT) is set to high, then sent to pin 9 of IC73 and pin 2 of IC59. IC66-8 can be high in both the PLAY and SEARCH modes. Therefore, the SEARCH mode (HIGH) is obtained from the output of pin 10 of IC66 that is sent to the OR gate of IC59-1/-2/-3 which outputs high only in the PLAY mode at pin IC59. This output is sent through pin 5 of IC60 to A30 PLAY STATUS (SY) to light the PLAY lamp on the SY-37 board.

When the BVE-500 is connected, output of IC66-8 is sent through pin 6 of IC62 to the B40 PLAY STATUS (36-pin) that feeds a 36-pin connector. This output is low both in the PLAY and SEARCH modes.

This signal is sent to the reel servo circuit. IC59-3 output is sent through IC7-2, IC3-12 and D45 pin 3 of to IC2 for multiplexing. Various gate circuits before the multiplexer will be described later. *1.

The fundamental requirement to establish the PLAY mode is to set IC38-1 output, that is sent to pin 11 of IC39, to low. Then, pins 9, 10 and 12 of IC39 should all be low so that its output is low. pins 9, 10 and 12 of IC39 are low only when pin 12 of IC54 is set to low (all conditions to press the pinch roller against the capstan are met), when the capstan motor rotates in the forward direction (A18 CAPSTAN DIRECTION is high), and when the A12 Function Enable signal from the reel servo circuit is high (meaning that the reel servo circuit is ready to enter the desired mode after a function is selected. The reel servo circuit sends the high signal).

The low output of IC39 is differentiated by C12 and R55 to generate a pulse that is wave-shaped by IC31-1/-2/-3 to feed a negative pulse to the B16 KEEP SOLENOID which is sent to the SY-71 board where the keep solenoid is positioned in the mechanical tension side. This negative pulse has a 30 to 60msec width.

The pinch roller is energized as follows. IC73-8 output is set to low and sent to pin 4 of IC39. IC39-3 is low when the drum rotates setting B5 to high as the DRUM ROTAT signal from the SV-24 board. Output at pins 21 and 5 of IC39 are also low so that IC39 output also goes low and is sent to pin 13 of IC38. The IC38-12 output is set to high by the A12 Function Enable signal, so IC38-11 output is set to low and is sent to pin 7 of IC48. As the A19 CAPSTAN SPEED IS LESS THAN 1.2 (*2) signal is low, IC53-123 is set to high, and this flip-flop is latched to set IC53-10 to high. Pin 9 of monostable multivibrator IC50 is low only for 0.18 seconds, so IC40-9 goes high 0.18 seconds after IC53-10 goes high and is the B23 Pinch ON (CS) signal which is sent to the SY-71 board where the solenoid is energized, pressing the pinch roller against the capstan.

The B23 Pinch ON (CS) signal is sent to the SV-24 board where this signal is controlled by the rotating speed of the capstan motor. (Details will be described in the SEARCH mode.) IC84-8/-9/-10 outputs are then used in order not to put the VTR into the REC mode at the preroll point, when the BVE-500 is used for auto-edit. When the BVE-500 is connected and auto-edit is performed, the machine will reach the preroll point during editing. The BVE-editor sets the PHASE STATUS-1 signal to low and sends the recording command from BVE into the BVT at the preroll point in order to display the E-E picture on the monitor. The VTR can possibly be put into the REC mode even if the pinch roller is off. To prevent the VTR from entering the REC mode, the HIGH-during-SEARCH signal is sent to PIN * OF IC14 where the IC64-8 output can be kept low as long as Pause Status-1 is low in the PB mode: therefore, B23 will not be high.

*1. The pinch roller is energized and pressed against the capstan 0.18 seconds after the PLAY signal is generated. If the reel motor rotates to move the tape in this 0.18 second period as in the PB mode, the amount of tape transport results in an editing acuracy error in every auto-edit operation. Therefore, the reel motor is kept in the STOP mode during this 0.18 second period. pin 3 of IC2 is muted (kept low) by D46 as long as IC50-9 remains low. IC2-7 (STOP mode) is kept high by D48 as long as IC50-10 remains high. This signal is multiplexed and sent to the reel servo RS-3 board.

The PLAY mode timing chart is shown on the attached sheet. When the machine enters other modes from the PLAY mode, the pinch roller is released first, and about 0.1 second (delay by R48-C99) later, IC12-9/-10 outputs are set to low to engage the electric reel servo system and prevent any picture less in the transition from the PLAY mode to other modes.

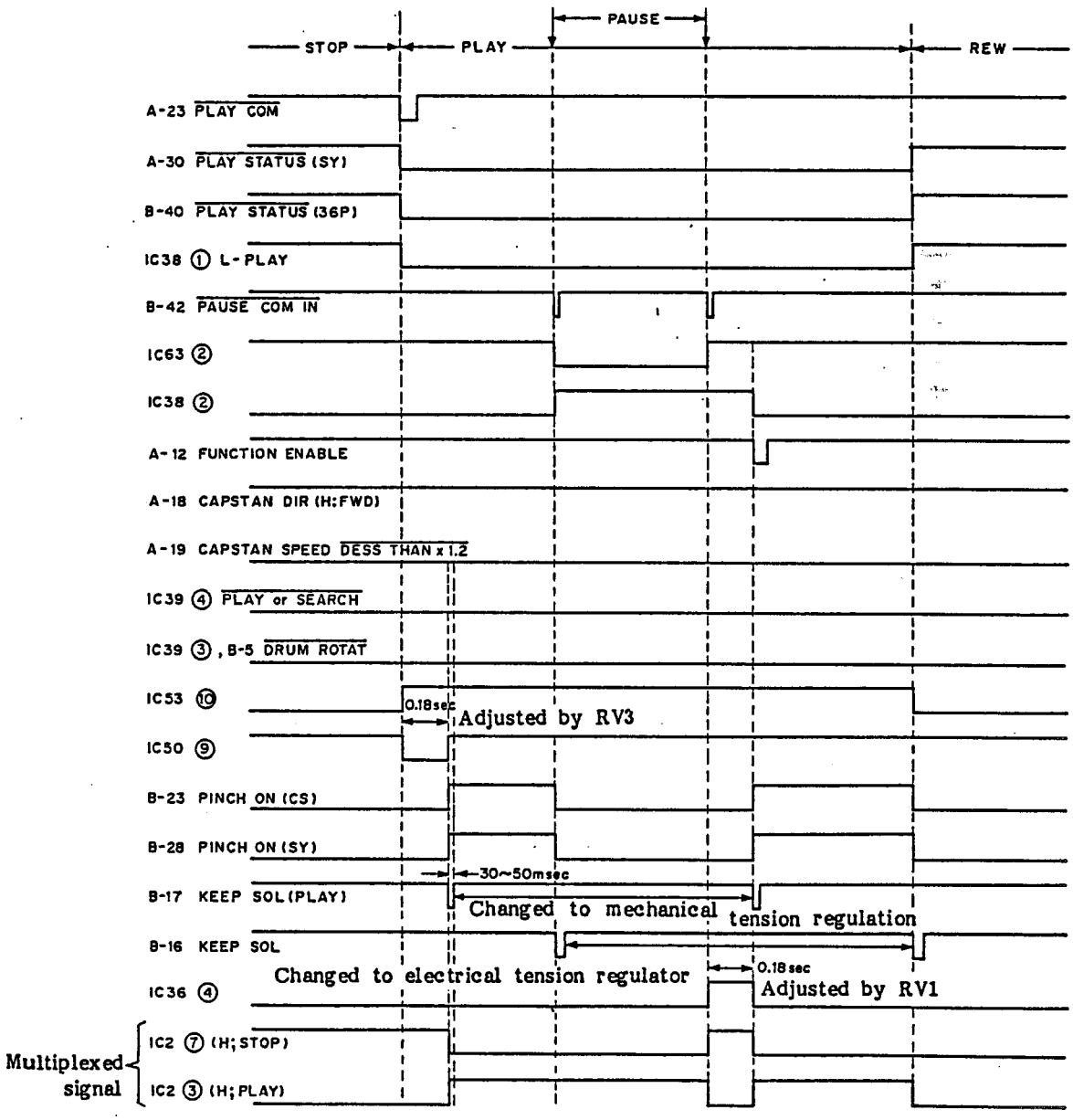

6. SEARCH MODE

The SEARCH command signal is sent from the SY-37 board to A24, setting IC48-9 to low. Since IC48-8 is normally low, IC44-13 is set to low, setting both IC66-15 and IC67-10 to low, and both IC66-10 and -8 high. When pin 10 of IC66 goes high the IC63-14 output is set to low and sent to pins 9 of IC59, pin 4 of IC44, and the A31 SEARCH STATUS (SY). (A31 output is low in the SEARCH mode. The reason IC59-8/-9/-10 is used is described in the STANDBY section.)

The SEARCH STATUS signal is sent to the SY-37 board to turn the SEARCH lamp on. When the SEARCH mode is established and the pinch roller is pressed on, the SY-37 circuit generates a tape-run-direction signal and tape-advance-speed signal in accordance with the SEARCH DIAL command. These signals are sent from the SY-37 board to the SV-24 and SY-36 boards.

The tape-advance-speed signal is introduced as the A21 SPEED command in the form of pulse frequency. The SEARCH DIAL's speed command determines the capstan rotation. The tape advance speed is determined by the capstan motor (up to eight times the tape speed). Since the capstan motor reaches the maximum (saturation) speed at eight times normal speed, the capstan is no longer used; the reel motor is used for speeds greater than eight times normal speed (it is practically the same operation as FF or REW mode). The SY-36 board detects whether a given speed command is higher than nine times normal speed. When a given speed command is less than nine times normal speed, the SEARCH mode is selected in which the pinch roller is on and the capstan motor determines the tape speed. When a given speed command is equal or greater than nine times normal speed, FF or REN mode is established in which the pinch roller is off and the reel motor determines the tape speed.

For this operation, the signal at TP1 is adjusted to have 18.5 micro seconds from the rising edge to the falling edge.

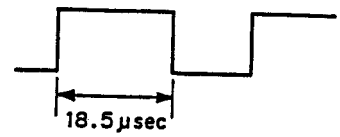

When the signal at TP1 is correctly adjusted, IC41-6 (monostable multivibrator) goes low in the SEARCH mode and high for the 10 times speed command.

When the A22 DIAL DIRECTION signal is high (forward), output at pin 3 of IC43 goes low and is differentiated by C27 and R116 to produce a differentiated pulse fed to IC43-2 and IC44-5, and to set IC66-14 and IC67-11 to low so the machine is practically working in the FF mode. The SEARCH lamp is still lit because IC63-14 is not reset, which the FF lamp will not light because IC72-9 is kept low and the FF STATUE remains high.

When the A22 DIAL DIRECTION is low (reverse), IC43-10 is set to low, setting IC66-16 and IC67-9 to low so the machine practically operates in the REW mode, but the FF lamp is not lit and the SEARCH lamp remains on.

When the 10 times normal speed command is given, the SEARCH lamp is on, the pinch roller is off, the tape runs in the FWD or REW direction, and the x10 signal is sent to pin 9 of IC8 where it is multiplexed and sent to the RS-3 board.

When the SEARCH key is pressed in the x10 speed mode, IC48-8 is kept high so that no signal can be input to set IC66-15 and IC67-10 to low. The signal at pin 10 of IC66 is sent to pin 13 of IC73, pin 9 of IC4 and pin 8 of IC3, then to pin 4 of IC2 where it is multi- plexed and sent to the RS-3 board. The machine must again remain the STOP mode until the pinch roller is on, as described in the PLAY mode. Diode D44 is thus required.

7. FAST FORWARD MODE

The FF command is sent from the SY-37 board to A25 as a low input signal, and IC42-1 and IC43-1, then to IC66-14 and IC67-11 to keep them low. The FF output (HIGH) is supplied from IC66-9 to the FF STATUS (36P) at B41, then to the BVE-500. (This FF STATUS in the 36-pin connector is the same as the FF STATUS in the x10 mode due to the search dial as described in a previous papagraph.)

The IC66-9 output is sent to pin 8 of IC71 and pin 4 of IC56, and finally to A32 as the FF STATUS (SY) and is also sent to the SY-37 board to turn the FF lamp on. The signal at pin 9 of IC66 is sent to IC3-5, then to IC2-2 where it is multiplexed and sent to the RS-3 board.

8. REWIND MODE

The REW command is introduced to A26 from the SY-37 board as a low input. This input signal is sent to IC43-12 and IC44-3 to keep IC66-16 and IC67-9 low. As IC66-11 is set to high, B39 is set to low, generating the REW STATUS (36P) output to be sent to the BVE-500 through the 36-pin connector. (This signal is also low when the tape runs in reverse in the x10 SEARCH mode.)

The SIGNAL AT PINS 11 of IC66 is sent to IC72-12 and IC56-3 and becomes the A33 REW STATUS (SY) that is sent to the SY-37 board to turn the REW lamp on.

The signal at pin 11 of IC66 is sent through IC3-1 to IC2-5 where it is multiplexed and sent to the RS-3 board.

9. STANDBY OFF MODE

The STANDBY mode is designed to stop the drum rotation and provide a small amount of tape slack because the STOP/STILL mode in which the tape is wound around the drum will cause head clogging. Machine operation is as follows. When the tape is wound around the drum completely in the STOP mode (detected by THREAD END-2), the STANDBY key is pressed. The STOP command signal is generated for 0.1 second. The A29 terminal receives the RELEASE IN signal, setting IC16-10 to high and the B25 S-BRAKE to low to energize the mechanical brake on the supply reel table. The reel servo circuit receives the A9 S-REEL M-BRAKE HIGH signal from this circuit. The STANDBY lamp is turned off by the A-6 STANDBY STATUS HIGH signal. This high signal is used so that the tape top and tape end sensors do not operate by the muting IC35-4 high setting.

When the STANDBY key is pressed, the STOP command (LOW) exists for 0.1 seconds and goes high. The SEARCH command is then introduced in place of the STOP command. The SEARCH command drives the capstan motor in the reverse direction at 1/5 times normal speed. About 0.18 seconds after the SEARCH command is introduced, the pinch roller is pressed on to advance tape the equivalent of about five frame lengths in the reverse direction and is stopped by the HIGH RELEASE signal (RELEASE signal has 0.8 second pulse width after the STANDBY key is pressed). Since the RELEASE signal is set to high, IC13-10 is set to low and is differentiated by R166 and C47. The differentiated pulse is sent to IC51-4 to establish the STOP mode. Even though the STOP mode is established, IC63-14 is not reset, so the SEARCH lamp will still be lit. Therefore, when the STOP mode is established, IC59-8 is set to high so that the SEARCH lamp will not turn on.

When the RELEASE signal returns to high, the B24 T-BRAKE signal is set to low to engage the brake on the take-up reel table; at the same time, the reel servo circuit receives the T-REEL M-BRAKE HIGH signal from A8.

The machine can be put into the STANDBY ON mode from the STANDBY OFF mode by pressing the STANDBY (STOP mode is set), FF, REW, PLAY, SEARCH or EJECT key. When any one of these keys is pressed, IC72-3 receives a low pulse while IC63-12, IC16-7 and IC16-11 receive a HIGH pulse resetting these flip-flops. (IC63-12 will not be set to high even though the SEARCH key is pressed because IC72-2 will not be set to low.)

As the flip-flop is reset, the B6 SERVO ENABLE signal is set to high, starting the head drum rotation. Though IC16-9 is low, IC36-9 is kept high for two to three seconds by the R222/C114 time constant, keeping the DRUM ROTATE signal high temporarily, and the STOP command is not sent to IC66-18. While the R222/C114 time constant keeps IC36-9 high, the B5 DRUM ROTATE signal (HIGH) is introduced. As the DRUM ROTATE HIGH is introduced, IC35-9, IC7-11, B24 and B25 are all set to high, releasing mechanical brake and setting A8 and A9 to low for normal operation.

When the machine's mode is shifted from the STANDBY OFF mode to PLAY, FF, REW, or SEARCH modes, these commands will not be sent to the RS-3 reel servo circuit using IC3 until the head drum is rotated.

When the machine enters the PLAY mode from the STANDBY OFF mode, the pinch-on current, S- or T-brake current, and KEEP SOLENOID current can activate a protector circuit located in the power supply circuit. Therefore, these currents are delayed. Fig. 4 shows an example when the machine enters the REC mode from the state of complete drum stoppage. When the REC command is introduced, the drum and capstan motors start rotating and the skew solenoid is energized for 0.5 seconds. The drum requires about 0.6 to 0.9 seconds before it starts rotation, then IC35-9 is set to high to release the supply-side and take-up side brake solenoids. The pinch roller is pressed on 0.5 to 0.7 seconds later, and the KEEP SOLENOID is put into the PLAY mode.

Fig. 5 shows the other example when the machine enters the STANDBY OFF mode from the STOP mode, and then enters the REC mode before the drum stops rotating. When the REC command is introduced, the skew solenoid operates for 0.5 seconds, and the supply-side and take-up side brake solenoids are released after a time delay determined by the R172/C35 time constant (0.3 seconds). The pinch roller solenoid is energized 0.5 to 0.7 seconds later and the KEEP SOLENOID is set to the PLAY mode so the machine starts employing the mechanical tension regulator (tape mechanical servo).

The machine can be shifted from the STANDBY OFF mode to any mode except the STOP mode, by simply pressing the desired function key.

The video read continues to contact the tape to display the picture in the STOP, STILL in the SERACH, and PAUSE modes by the BVE-500 editor in which the video head contact the same area of magnetic tape and may clog the head even though the tape tension is reduced. To prevent the video head from clogging, eight minutes is the maximum time for the head to contact the tape. Eight minutes later, the same operation as the STANDBY OFF obtainable by pressing the STANDBY key is established automatically.

The A6 STANDBY STATUS (SY) turns off the STANDBY lamp when STANDBY OFF is established and THREAD-2 END is not detected.

A9 (S-REEL MOTOR BRAKE) and A8 (T-REEL MOTOR BRAKE) are muted by transistors Q2 and Q3 to keeps A8 and A9 low when the power switch is turned off by using residual voltage while THREAD-2 END is detected. (If muting is not applied, tape slack will possibly result in tape demage.)

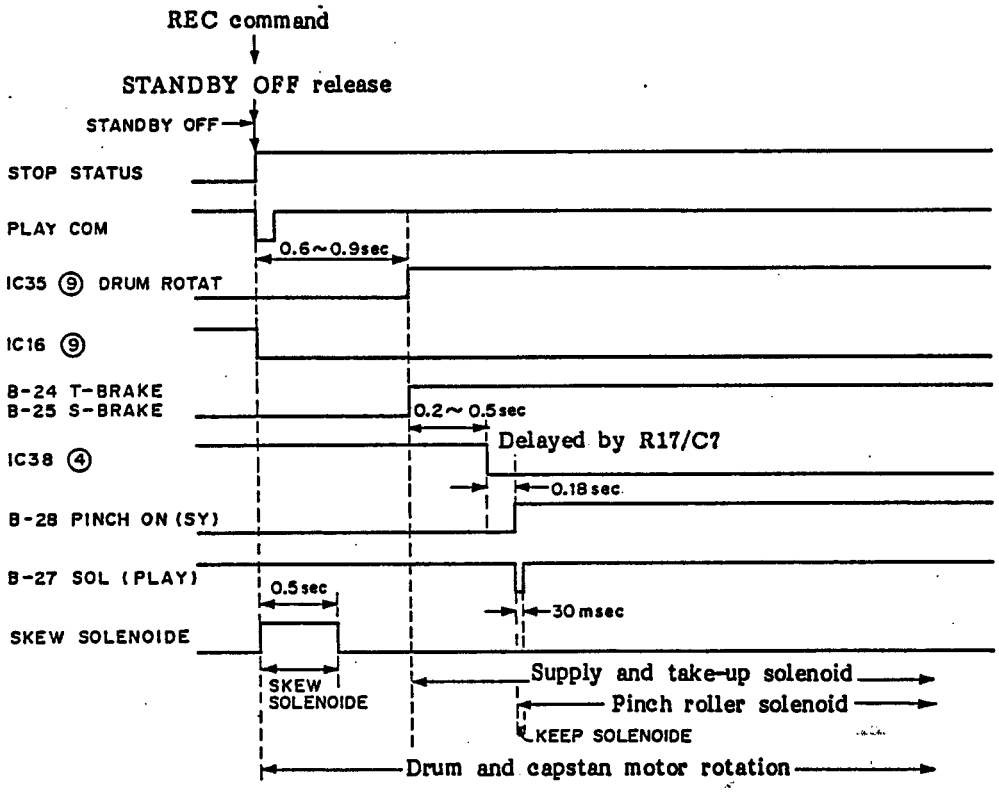

Fig. 4 Leading Edge during Head Drum Stoppage

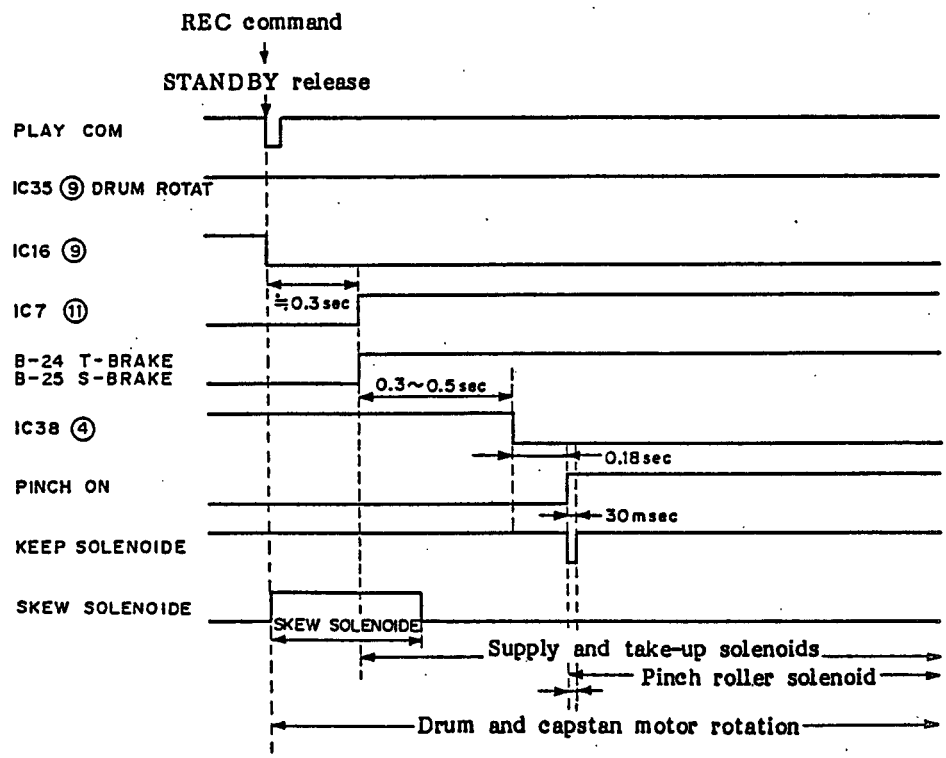

Fig. 5 REC Mode during Head Drum Rotation

10. STOP MODE

The STOP command Is introduced from the SY-37 board into A28, setting IC67-7, IC66-18 and IC66-8/9/10/11/12 to low. It sets the IC58-10 and IC2-7 to high and the output is multiplexed and sent to the RS-3 reel servo circuit. The A35 output is also set to low and sent to the SY-37 board.

The STOP mode is established on the following occasions.

(1) When the head drum rotation is stopped in the normal operation (where the head drum should rotate).

The B5 DRUM ROTATE signal is set to low in this occasion. While the DRUM ROTATE is transitioning from high to low, several transient pulses are generated that repeatedly engage and release the S-BRAKE and T-BRAKE solenoids. These transient pulses are smoothed out by R19, R20 and C97. The DROM ROTATE signal is muted by IC35-1, IC35-2 and IC36-9 so the STOP mode is not established.

IC35-1 provides about three-second muting because the head drum will not start rotating immediately after the cassette is inserted and lowered. The head drum is expected to start rotating during this three-second period.

IC35-2 provides drum muting when the power switch is turned on; the power is switched off with the tape threaded around the head drum. When the power switch is turned on, the tape is ejected. This muting ensures that the tape is ejected when the head drum is stopped. Drum rotation is prevented until the tape is ejected to the UNTHREAD END position. After the UNTHREAD END is detected, an additional one-second delay is provided by the R21/C4 time constant.

IC36-9 prevents drum rotation during STANDBY OFF, as described in the on STANDBY OFF section.

(2) When the tape top is detected during REV or REV mode, B26 is set to low. The machine enters the FF mode for about two seconds. The differentiated pulse from C3/R13 is input to IC51-2 to establish the STOP mode.

(3) After the cassette has risen, B29 (Cassette-in) is set to low, B31 (Cassette-down) to high, and IC51-11 is set to low to establish the STOP mode.

(4) The STOP mode is established when the power switch is turned on (the machine was in the POWER OFF mode with the tape left threaded around the head drum). The tape is first ejected and IC53-2 is set to low at the UNTHREAD END position. R86/C19 provides a differentiated pulse to IC51-3 to establish the STOP mode.

(5) The STOP mode is established when the cassette-up/-eject operation takes too long. After cassette-up has started, the cassette should be ejected out of the cassette compartment within the R74/C16 time constant that sets IC69-5 to low. If the cassette is not ejected within this time constant, a fault is assumed to have occurred in the cassette eject system so the machine enters the STOP mode again and the cassette is lowered and starts threading again.

(6) When the machine has entered the STANDBY OFF mode and the tape has been slackened, C47 and R166 generate a differentiated pulse that is sent to IC51-4 and establishes the STOP mode.

(7) When a TAPE PROTECTION signal is sent from the RS-3 reel servo circuit to the A13 terminal while the THREAD-2 END is detected, a differentiated pulse is sent from R9 and C20 to IC51-12 to establish the STOP mode.

11. TAPE END DETECTION

When the tape end is detected while it is threaded around the drum, the tape end signal (LOW) is sent from the BE-3 board to B27 on the SY-36 board. This signal sets IC67-5 to low and starts the REW mode automatically.

This tape end signal is inhibited on two occasions.

(1) The tape end is inhibited while the machine is in the STANDBY OFF mode or is in the STANDBY ON mode until the head drum starts rotating because the tape is released so the external light can easily fall on the tape end sensor.

(2) When the KEEP solenoid is changed from the PLAY mode mechanical tension regulator to other modes, the tape vibrates so that the external light can fall on the tape end sensor.

The tape end inhibiting information is sent to pins 12 and 13 of IC71, and its output is sent to pin 4 of IC35 for inhibiting.

12. TAPE TOP DETECTION

When the tape top is detected while it is threaded around the head drum, the tape top signal is sent to IC42-2 to establish the FF mode. Since the tape is advanced by the FF mode and the tape top is no longer detected, IC74-9 goes high (delayed by R11/C2). The IC30-4 output is set to low and differentiated by R13 and C3; its negative pulse is sent to IC51-2 to establish the STOP mode. R11/C2 has a time constant of about 2 seconds.

13. HUMIDITY DETECTION

When water drops accumulate on the humidity sensor attached to the head drum, resistance between the humidity sensor terminals decreases so that output of IC1-12 HUMID DETECTOR goes low. This signal is sent to the SY-36 board's B14 HUMID IN terminal where IC52-8 is set to low to establish the EJECT mode. When condensation is detected, water drops may exist between the tape and upper drum and may damage the tape. Therefore, upper drum rotation is stopped. IC37-4 is set to low, setting B6 (SERVO ENABLE) to low to stop the drum. Tape eject has another problem. If the tape is unthreaded so that the threaded tape is taken up by the supply-side reel table, the tape is pulled across the humid surface of the head drum. A large supply-side reel torque will be required to move the tape that adheres tightly to the drum surface due to the drops of water. Therefore, the threaded tape is wound onto the take-up reel when the HUMIDITY signal is detected. B25 S-BRAKE is engaged while the B24 T-BRAKE is released (this is the reverse of normal unthreading). The UNTHREADING (S), that is multiplexed and sent to the RS-3 reel servo circuit, is set to low which IC8-6 UNTHREADING (T) is multiplexed and sent to the RS-3 board. The AUTO OFF lamp is lit when the HUMIDITY signal is low.

After condensation is detected and the cassette is raised, the head drum is rotated to evaporate the condensation. IC23-4 is set to high, setting B6 (SERVO ENABLE) to high.

14. TAPE PROTECTION

The TAPE PROTECTION signal is sent from the reel servo circuit to A13 on the SY-36 board when abnormal condition are detected by the reel servo circuits.

When the TAPE PROTECTION signal is introduced at the THREAD-2 END position, IC38-10 is set to low, and the differentiated (by R91/C20) negative pulse sets IC51-12 to low to establish the STOP mode. If the TAPE PROTECTION signal remains low after the machine has entered the STOP mode, 1 to 1.5 seconds later (time constant of R92/C21), IC52-13 is set to low, setting IC53-9 to high to establish the EJECT mode. The threaded tape is unthreaded and taken up by the take-up reel table as described in the HUMIDITY section. If the TAPE PROTECTION signal is introduced when the THREAD-2 END is not detected, the threaded tape is taken up by the take-up reel motor since IC53-9 is set to high establishing the EJECT mode. The AUTO OFF lamp lights when the TAPE PROTECTION signal exists.

15. AUTO OFF LAMP

The AUTO OFF lamp lights when the TAPE PROTECTION signal from the reel servo circuit is low and when condensation is detected. B33 is set to low.

16. TENSION REGULATOR SW SIGNAL

The TEN REG SW (Tension Regulator Switch) signal is sent from the RY-37 board and is always high if the BVU-800 series VTR is connected. When the BVU-820 is connected and the DT switch is turned on, the reel servo system remains the electric servo control system even in the PLAY mode. While the electric reel servo is used, any lack of picture during the transient period from SEARCH mode to PLAY mode is eliminated. The R165/C54 time constant eliminate malfunction, due to noise.

17. HOURS METER

The HOURS METER signal prevents hour meter operation when the THREAD-2 END is not detected, and when the machine is in the STOP and STANDBY OFF modes even though the THREAD-2 END is detected. The B34 output is set to low to stop hour meter operation.

18. BRAKE IN

The BRAKE IN signal is sent from the reel servo circuit. The BRAKE IN high signal releases both the supply and take-up side reel motor solenoids so that the reel brakes are engaged.

19. LOADING DISABLE

This signal is sent from the reel servo circuit; when it is low, both threading and unthreading are disabled.

20. FUNCTION TRIGGER

This signal is sent from the reel servo circuit to IC8-1 as a multiplexed high signal whenever the VTR function is switched over from one mode to the other mode. But this signal is not sent when the mode is changed from PLAY mode to SEARCH mode, and from SEARCH mode to PLAY mode. Even during PLAY and SEARCH modes, this signal pulse is introduced whenever the pinch roller is released from the capstan. D35 is connected for this purpose. This signal has a pulse width of about 2.5 to 4.5 msec.

21. EMERGENCY

The EMERGENCY signal is sent from A39 on the SY-36 board to the SY-37 board. If the low EMERGENCY signal is sent, all the modes are reset so that any function command is not generated and supplied from SY-37 function circuits. All of the operations during this EMERGENCY period are controlled by the function signals that are generated on the SY-36 board.

The function signals generated by SY-36 during EMEGENCY are as follows.

(1) While the TAPE END is detected . . REW mode
(2) While the TAPE TOP is detected . . FF mode
(3) During Cassette-Out period . . . . STOP mode
(4) When output of B-29 (Cassette-In)and B-31 (Cassette-Down) on the SY-36 board are low
. . . . STOP mode
(5) While the TAPE PROTECTION is present
. . . . STOP or EJECT mode
(6) If the head drum is stopped when the cassette is lowered and the STANDBY OFF does not
. . . . STOP mode
(7) If the cassette does not rise within the R74/C16 delay after cassette-up
. . . . STOP mode
(8) When the power switch is turned on while the tape is still threaded around the head drum when the power was switch off.
Before the UNTHREAD END is deleted
. . . . EJECT mode
(9) While the HUMID IN signal is input
. . . . EJECT etc.

22. REMOTE

The REMOTE signal at A-7 is set to low when the REMOTE/LOCAL select switch on the front panel is set to the REMOTE position and the 36P/9P select switch is set to the 36P position. It controls the 36-pin external connecting cable IN/OUT signals.

23. PAUSE command

The PAUSE command (LOW) is applied whenever the PAUSE key is pressed at the 36-pin remote end (BVE-500 etc.) that is connected via the 36-pin connector. When the SEARCH or PLAY mode is selected, IC63-4 is low setting IC63-2 to low and IC63-3 to high, B-36 provides the PAUSE STATUS-1 (LOW) and the B-35 PAUSE STATUS-2 (LOW) signals that are sent to the 36-pin connector. Since IC39-5 is high, the pinch roller is released from the capstan. If the machine is in the PLAY mode at this moment, R727/C121 provide delay and set IC12-13 to low, selecting the electrical reel servo system (electrical tension regulator). If the timing of pinch roller OFF and employment of the electrical tension regulator coincide, the tape is jerked and the picture will be missing. Therefore, R727/C121 delays the switch to the electrical tension regulator 0.1 seconds.

If the PAUSE command is introduced again, IC63-1 and IC63-2 are reversed so that the pinch roller is pressed (a toggle operation). When the PAUSE command is introduced to turn the pinch roller on, IC50-13 cannot be set to high immediately after PAUSE is released, due to the R225/C120 time constant. It follows that IC50-9 and IC50-10 remain unchanged while IC25-13 is set to low immediately. When PAUSE is released, the pinch roller pressure is delayed for 0.18 seconds since IC50-6 is set to high for 0.18 seconds, setting IC25-11 to high.

When the operator selects the PAUSE position on the SEARCH dial and the VTR is already in the PAUSE mode due to another PAUSE command, the machine PAUSE is released since IC63-1 and IC63-2 are reset. C100 and C116 remove noise in the PAUSE command input. IC57-12, IC57-13 and IC57-11 provide feed back to form a Schmitt trigger that is robust against noise.

24. PAUSE STATUS-1

The PAUSE STATUS-1 signal has three purposes.

(1) When the PAUSE command is given and the PAUSE mode is established, this signal is set to low and sent out as the status signal.

(2) When this signal line is grounded at BVE-end or BVR-end, the BVU-machine turns the pinch roller off.

(3) This signal line is set to high when the actual tape running direction and tape direction command coincide, it is set to low when they are opposite.

Detail description for each of the three occasions.

(1) This case is described in the previous section.

(2) When the operator selects the SEARCH dial's PAUSE (center) position in the SEARCH mode, a low level is applied that sets IC25-11 to high and releases the pinch roller; B-23 PINCH ON (CS), connected to the SV-34 servo circuit, remains high. It will drive the capstan motor at the normal speed in SEARCH mode even if the pinch roller is released. Sometimes the SEARCH dial may be selected in x1/30 normal speed position next time in this set-up of PAUSE STATUS-1 (LOW) with the pinch roller released. Since the capstan is rotating at the normal speed, the pinch roller will be pressed against the capstan even when the capstan rotating speed has not decreased to the desired 1/30 normal speed (slow-speed search becomes difficult). For the operator's convenience, the capstan motor is stopped when the PAUSE STARTUS-1 signal is present with the pinch roller off. This is the signal which is sent to the SV-24 servo circuit as if the pinch roller is pressed to stop the capstan motor. (When the PAUSE STATUS-1 is set to low at the BVE-end, the capstan motor rotates at 1/30 normal speed.)

(3) If the actual tape running direction and tape direction command from BVE- or BVR- are opposite, this signal is low. A high signal on this line is used in BVE- equipment to reverse the timer/counter at the edge of a high signal. Details are described below.

Fig. 6 shows an xample when the tape runs in the reverse direction in the SEARCH mode and a command is sent from the BVE-500's search dial to move the tape in the forward direction. B-11 is set to high, setting IC22-6 to high. But since the capstan is rotating in the reverse direction, IC22-10 is high. IC17-10 is always high except in the SEARCH mode, setting IC29-9 to low and B-36 output to low. When the tape finally starts running in the forward direction, IC22-10 is set to low, setting IC29-9 to high and B-36 output to high

When the PLAY mode command is generated while the tape is running in the SEARCH reverse direction, outputs of IC22-10 and IC22-6 are set to high, setting IC17-8 to low. But since the capstan is not turning in the forward direction yet, IC17-10 is high, setting the B-36 output, which is sent to the 36-pin connector, to low.

Function of diode D51: when the PAUSE mode is maintained for more than 8 minutes, the STANDBY OFF mode is established, setting A-18 to low. Outputs IC29-1, IC29-2 and IC29-8 will be set to high, setting B-36 to low so that BVE-'s PAUSE lamp will be lit. To prevent this, the A-18 CAPSTAN DIRECTION signal is kept high by D51 during STANDBY OFF mode.

Function of D55: when the PAUSE mode is maintained longer than 8 minutes with the BVE-500's search dial in the forward direction, the STANDBY OFF mode will be established. Even though the tape is running in the reverse direction, the DIAL DIRECTION signal (HIGH) will set IC29-1, IC29-2 and IC29-8 to high to keep the B-36 PAUSE STATUS-1 output to low, resulting in pinch roller OFF and tape slack being restored. To prevent this, D55 is inserted in the STANDBY OFF mode to set the DIAL DIRECTION signal to low at B-11.

25. PAUSE STATUS-2

This signal is set to low only when the PAUSE command is generated, setting IC63-1 to high. This signal is sent to the 36-pin connector.

26. PINCH ON LESS than x 1.2

This signal is used in the TIME CODE (TC-13) circuit board, and is low only when the capstan speed is less than 1.2 times normal speed with the pinch roller ON.

27. STOP STATUS (36P)

This signal is set to low only when the STOP mode is established by BVE- or BVR- equipment through the 36-pin connector, and when the actual tape running direction and tape direction command generated by function keys (except for PLAY and SEARCH modes) are opposite. Fig. 7 shows the timing chart.

If this pulse appears during the AUTO EDIT or PREVIEW modes, the AUTO EDIT or PREVIEW mode will be stopped.

28. CASSETTE UP/DOWN DRIVE

When the CASSETTE-DOWN signal is fed to CN46-1 on the SY-71 board, Q1 is turned on; Q6 and Q3 are on. Current flows through Q2, D13, a motor, and Q3 so that the motor starts rotateing.

Function of Q4 in this circuit: when Q6 is turned on, the motor starts rotating, and current flowing through time constant R4/R5/R6/C3 turns Q4 on about 2.5 seconds later. Q1 is turned off to stop the motor.

Function of D7: Q7 should be off while Q6 is on, but safety tests such as UL will short-circuit the Q7's collector-emitter, or if the CASSETTE-DOWN and CASSETTE-UP signals are both high, Q3 and Q7 will be both on which will destroy transistor. D7 is used to inhibit the input CASSETTE-DOWN signal to protect the transistor from thermal break-down. The cassette-up circuit has the same function.

29. THREADING/UNTHREADING MOTOR DRIVE

Circuit operation is the same as in section 28. The motor should stop at the UNTHREAD END position at the end of unthreading, but the motor rotates a little in the threading direction because of its reverse-induced power. To prevent this, current flows through the Q12 emitter, Q12 base, R125, R76, and Q52 base to turn Q52 and Q13 on when the UNTHREAD END signal (LOW) is detected. Current also flows in reverse through the Q17 emiter, Q17 base, R18, R80, Q53 base so that Q53 and Q16 are turned on. Motor terminals are thus shorted to prevent rotation. This circuit has another characteristic. Because of D22, D22 will also be on since Q52 and Q53 are always on if their input is low so the threading command signal is also muted by D22. To start motor rotation in the threading direction, capacitor C19 causes starting current to flow through Q15.

30. TENSION SOLENOID DRIVE

Circuit operation is the same as in sections 28 and 29.

When the power is turned on and the cassette tape is inserted.

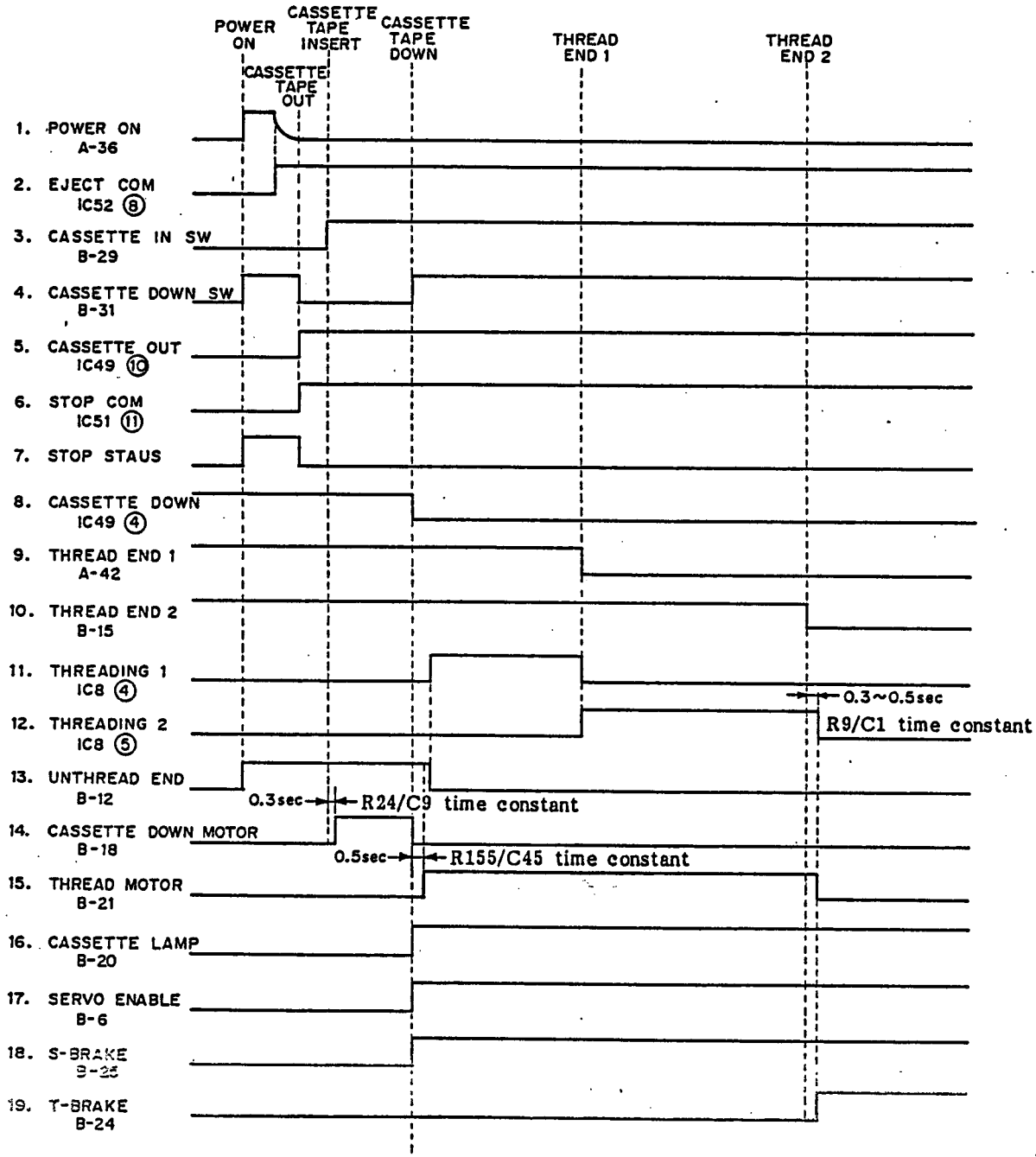

When the power is turned on with the cassette tape threaded

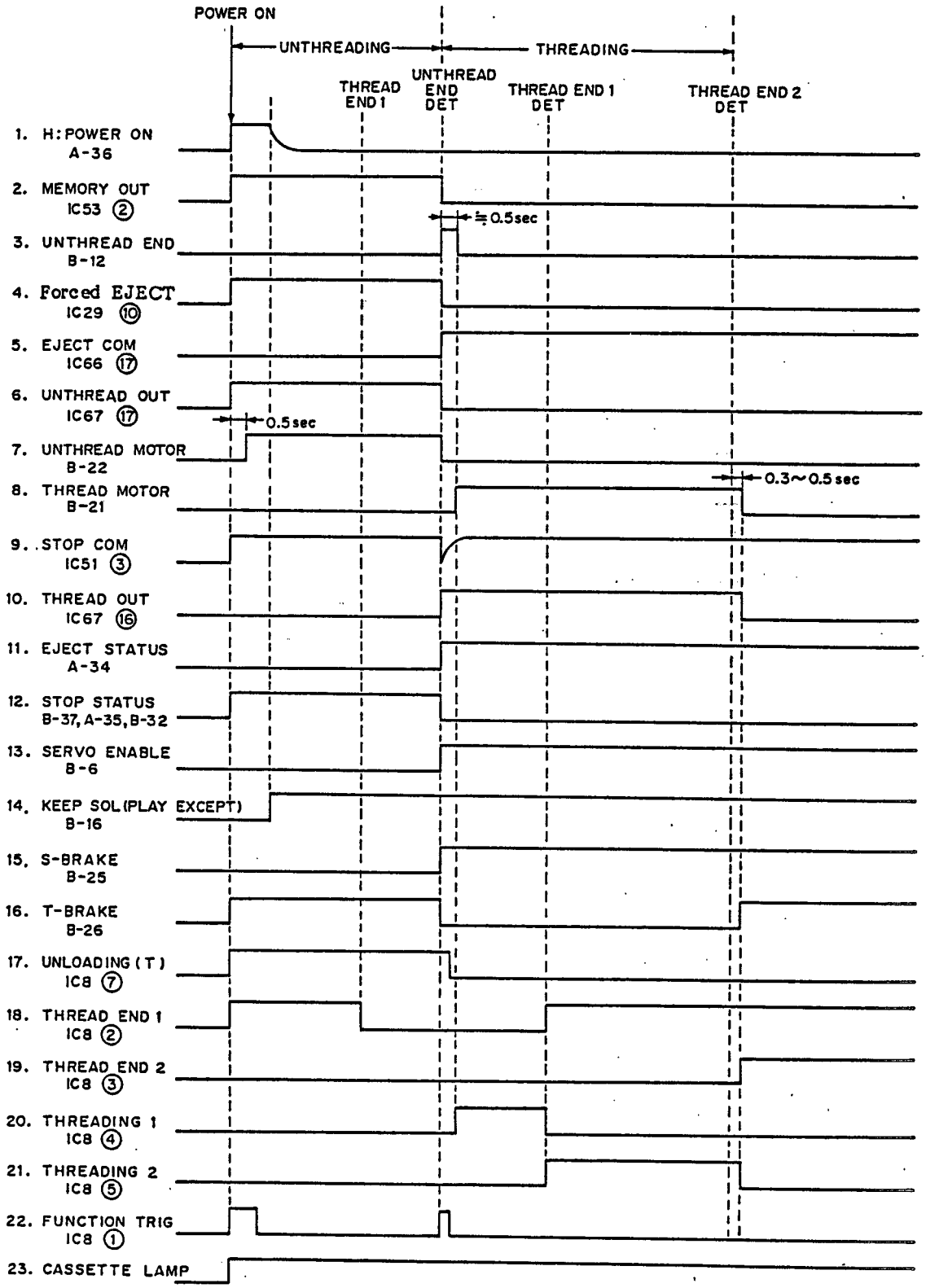

EJECT (when changed from PLAY to EJECT)

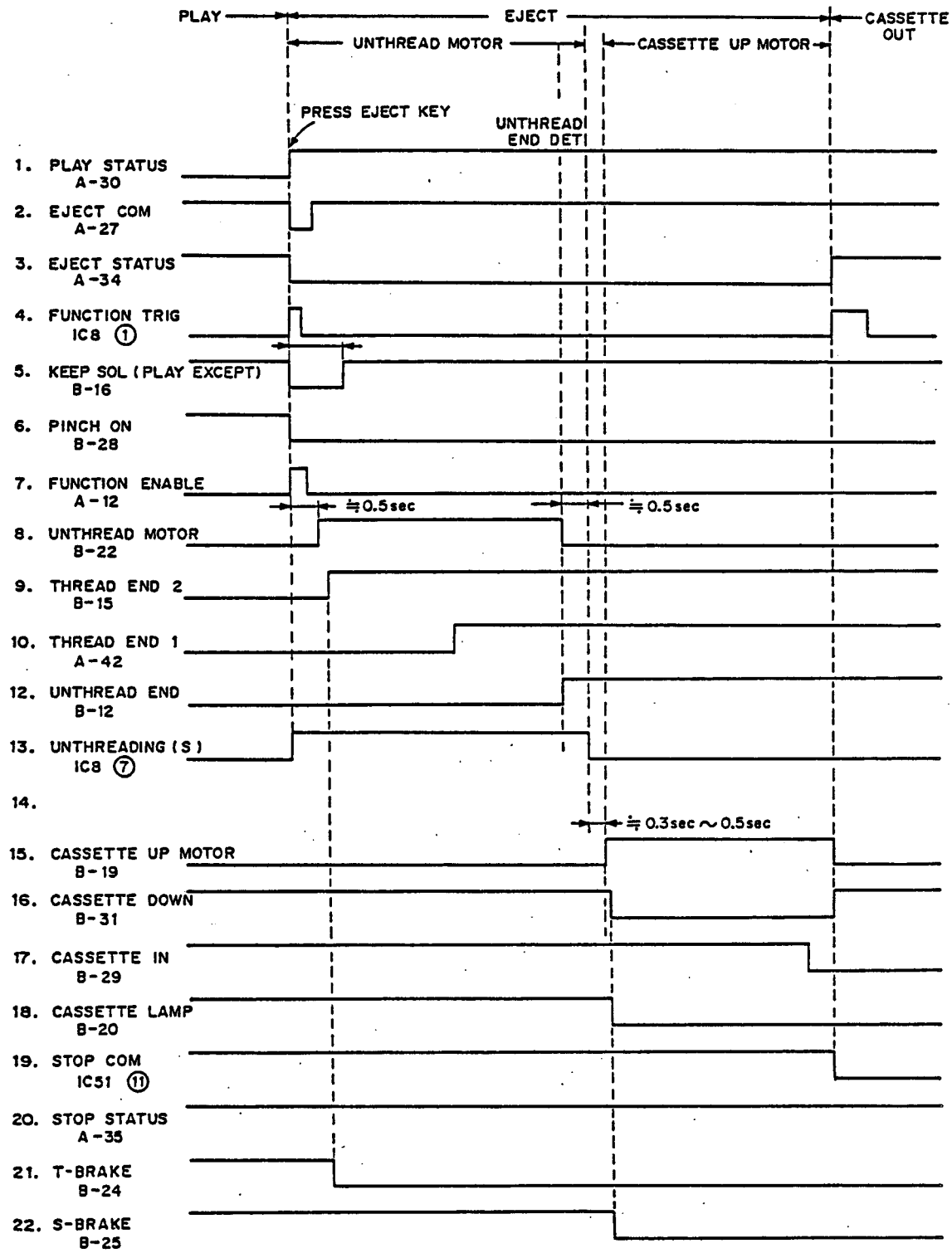

CASSETTE UP/DOWN abnormal operation

Ejected when the cassette tape is inserted and taken out immediately.

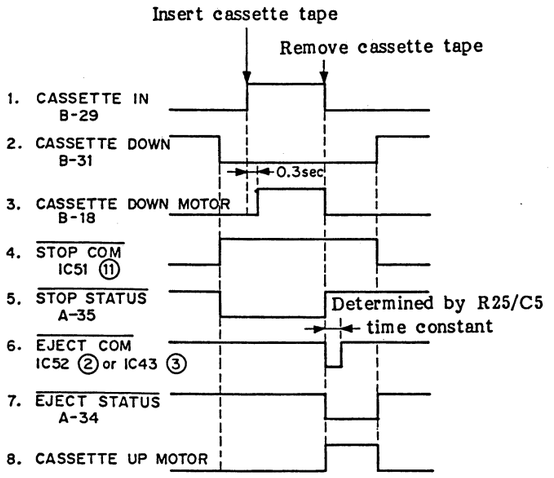

If more than 2 to 3 seconds are required for the cassette to lower, it determines that some trouble has occurred and the motor is stopped. (Maybe cassette compartment is jammed.)

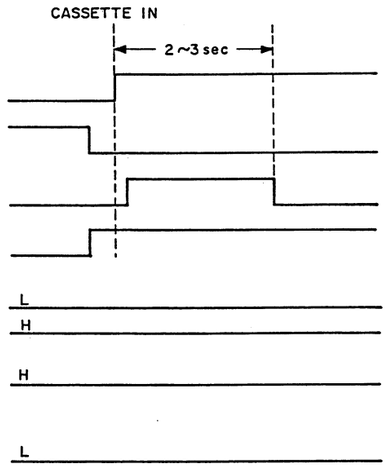

SY-36 generates the CASSETTE-DOWN signal.
The SY-71 circuit automatically stops the motor after 2 to 3 seconds.

If more than 5 seconds are required for the cassette to rise, something abnormal has happened, so the STOP mode is established and threading is restarted.

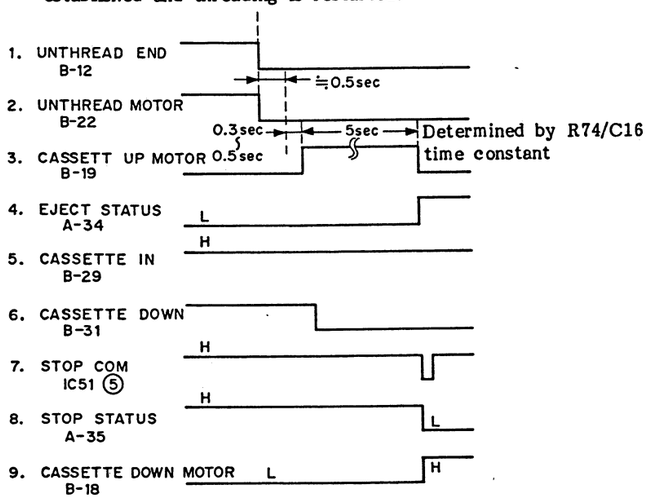

PAUSE STATUS-1 (during remote operation)

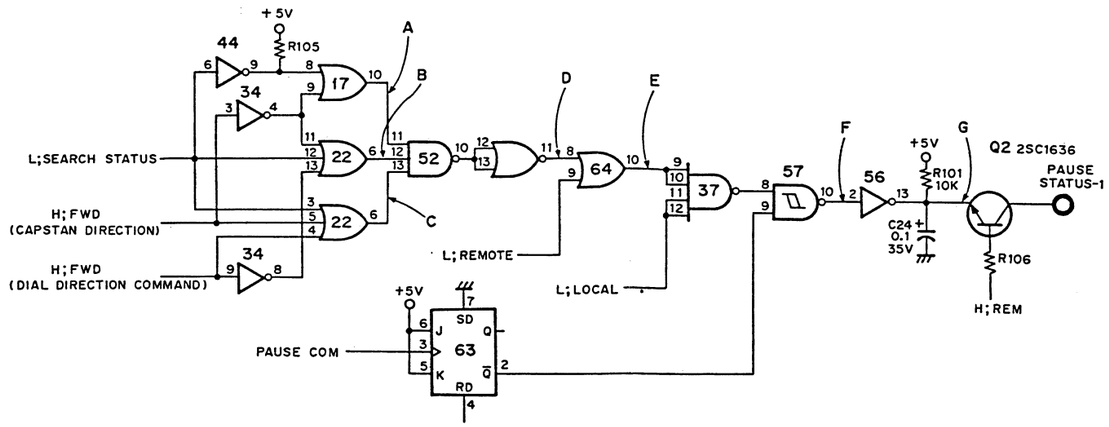

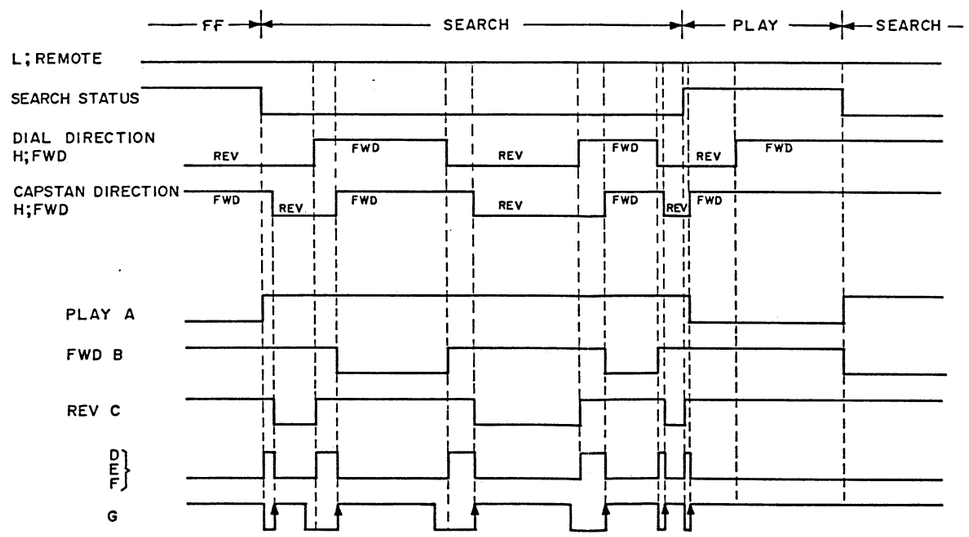

TAPE PROTECTION signal

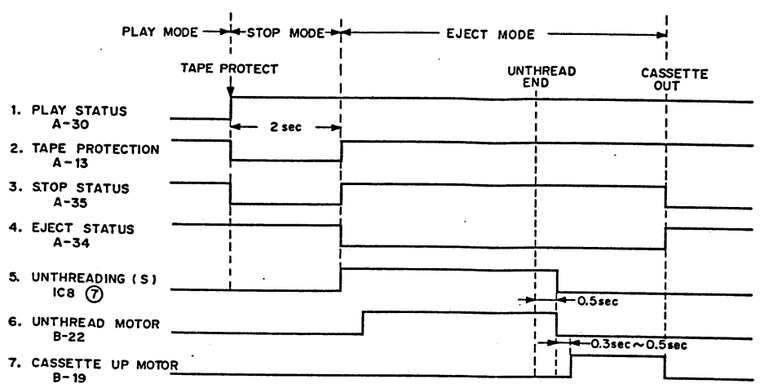

HUMID SENSOR (when the humid sensor is operated in the PLAY mode)

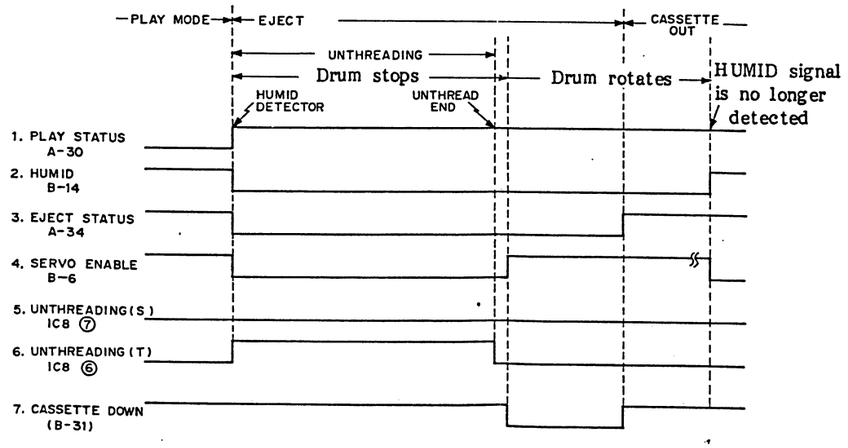

LH0080 (SHARP)
N-MOS 8-BIT MICROPROCESSOR
— TOP VIEW —

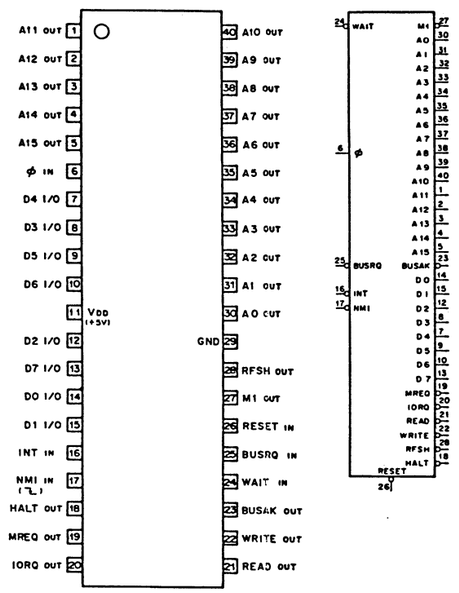

LH0084 (SHARP)
N-MOS 2-CHANNEL SERIAL INPUT/OUTPUT FOR MICROCOMPUTER SYSTEM
— TOP VIEW —

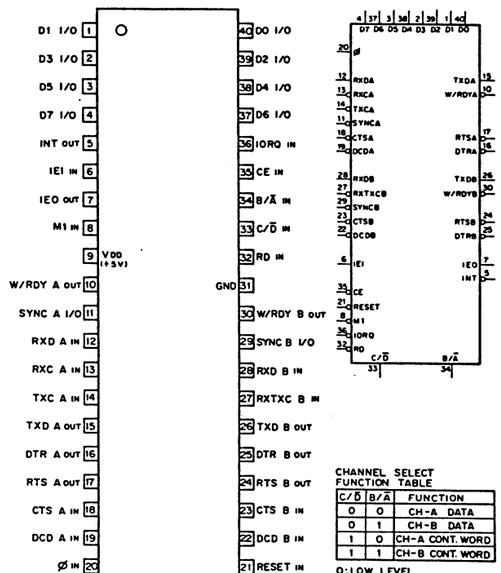

CHANNEL SELECT FUNCTION TABLE

C/D̄	B/Ā	FUNCTION
0	0	CH-A DATA
0	1	CH-B DATA
1	0	CH-A CONT. WORD
1	1	CH-B CONT. WORD

0; LOW LEVEL
1; HIGH LEVEL

TC4528BF
TC4528BP (TOSHIBA)
uPD4528BC (NEC)
C-MOS RETRIGGERABLE/RESETTABLE MMV
— TOP VIEW —

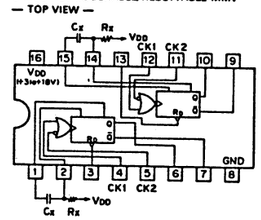

INPUTS			OUTPUTS	
CK1	CK2	RD	Q	Q̄
↓	1	1	↑	↓
↓	0	1	0	0
1	↑	1	Q	Q̄
0	↑	1	↑	↓
X	X	0	0	1

0 : LOW LEVEL
1 : HIGH LEVEL
X : DON'T CARE

OUTPUT PULSE WIDTH Q OR Q̄
* (FOR $C_x \geq 0.01\mu F$ USE FORMULA)
$PW = 0.2 \cdot R_x \cdot C_x \cdot f_n$ (V_{DD} - GND)
* (FOR $C_x < 0.01\mu F$ USE DATA BOOK)

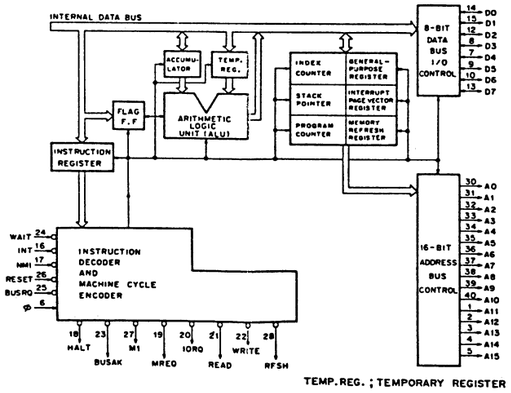

TEMP. REG. ; TEMPORARY REGISTER

Ø	; CLOCK
A0-A15	; 3-STATE ADDRESS OUTPUT
BUSAK	; BUS ACKNOWLEDGE
BUSRQ	; BUS REQUEST
D0-D7	; 3-STATE DATA INPUT/OUTPUT
HALT	; HALT STATE
INT	; INTERRUPT REQUEST
IORQ	; 3-STATE I/O REQUEST
M1	; MACHINE CYCLE 1
MREQ	; 3-STATE MEMORY REQUEST
NMI	; NON-MASKABLE INTERRUPT (DOWN EDGE TRIGGER)
READ	; 3-STATE MEMORY READ
RFSH	; REFRESH
WRITE	; 3-STATE MEMORY WRITE

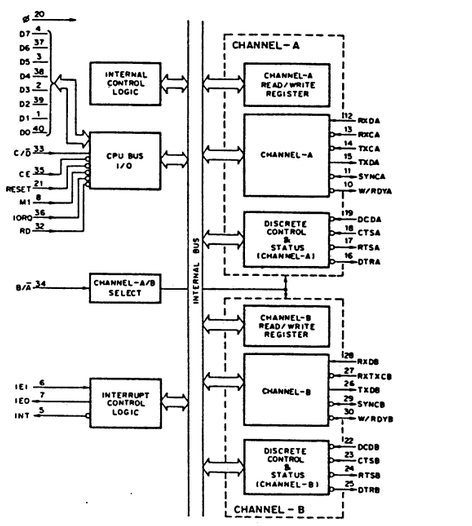

Ø	; SYSTEM CLOCK IN
D7-D0	; DATA I/O
C/D̄	; CONTROL/DATA SELECT IN
CE	; CHIP ENABLE IN
M1	; MACHINE CYCLE 1 IN
IORQ	; I/O REQUEST IN
RD	; READ IN
B/Ā	; CHANNEL B/A SELECT IN
IEI	; INTERRUPT ENABLE IN
IEO	; INTERRUPT ENABLE OUT
INT	; INTERRUPT OUT
RXD	; RECEIVE DATA IN
RXC	; RECEIVE CLOCK IN
TXC	; TRANSMIT CLOCK IN
TXD	; TRANSMIT DATA OUT
SYNC	; EXTERNAL CHARACTER SYNCHRONIZATION I/O
W/RDY	; WAIT/READY OUT
DCD	; DATA CARRIER DETECT IN
CTS	; CLEAR TO SEND IN
RTS	; REQUEST TO SEND OUT
DTR	; DATA TERMINAL READY OUT

SYSTEM CONTROL

CONTROL PANEL (Figs. 3-13a,b,c)

The control panel interfaces with board SY-37 and allows the input of local mode commands and provides displays which indicate mode status and tape time.

TIMER DISPLAY AND STATUS INDICATOR FUNCTIONS (Fig. 3-13a)

Timer Display

The timer display comprises eight, seven-segment LED digits mounted in pairs to indicate: Frames, Seconds, Minutes and Hours/Minus. Each digit is sequentially enabled by decoded digit signals (Dig. 0-3). The value displayed by each digit is provided by the multiplexed LED A to G signals.

Status Indication

Status information is provided by conventional lamps and LED indicators. The select signals are supplied by board SY-37 in the form of three multiplexed serial inputs (S1,2,3). These serial signals are converted to parallel (demultiplexed) and used, after gating/buffering etc., to provide the indicator drive signals. The demultiplex process is controlled by the Multiplex Clock input from SY-37 board in a manner identical to that described for the Drum/Capstan Servo Board SY-52 (Fig. 3-6a/b). Note that the A,B,C, address/select signals are used also to select signals output to board SY-37 (see Fig. 3-13b).

SEARCH RATE DETECT AND SIGNAL MPX (Fig. 3-13b/c)

The functions shown on this diagram determine:

a) Search speed and direction (shuttle and joy).

b) Local mode selections.

The resultant data is then converted to serial form for application to board SY-37 for processing.

Joy Speed Detection

This function is shown at the top of the diagram. An eight-bit shift register is used to indicate the joy speed requirement. The register is continually clocked by the 150Hz SLOW CK signal; this causes a high logic level (when dial is moved) to be shifted through the register. The quantity of high level bits in the register depends upon the rate of dial movement. The status of the eight bits is used by the microprocessor (board SY-37) which controls tape speed via the capstan servo system. Required direction is separately detected and input to the microprocessor board via multiplexer IC11 at input S5.

Shuttle Speed Detection

Shown at the centre of the diagram this function uses a four-bit counter which is incremented or decremented by dial movement and direction. This provides the shuttle speed requirement to board SY-37. The count value is from zero to eight; zero equals still (or dial centre-counter reset) while one to seven causes a tape speed of up to five times normal. These are the capstan-driven speeds. An eight count initiates the non capstan-driven times 10 mode. The counter value is always within the range zero to eight irrespective of demanded tape direction.

Parallel to Serial Conversion

Conversion is performed by muliplexers as shown. All multiplexers are controlled by the A, B and C clock signals (see Fig. 3-13a) which originate at the microprocessor board SY-37. Each of the serial outputs are re-converted back to parallel on board SY-37 for subsequent 'reading' by the microprocessor (see Fig. 3-14).

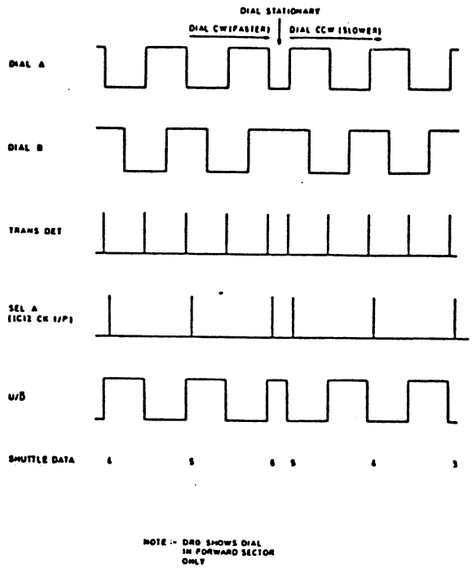

NOTE :- DRG SHOWS DIAL IN FORWARD SECTOR ONLY

Fig. 3-13c - Shuttle Timiny Example

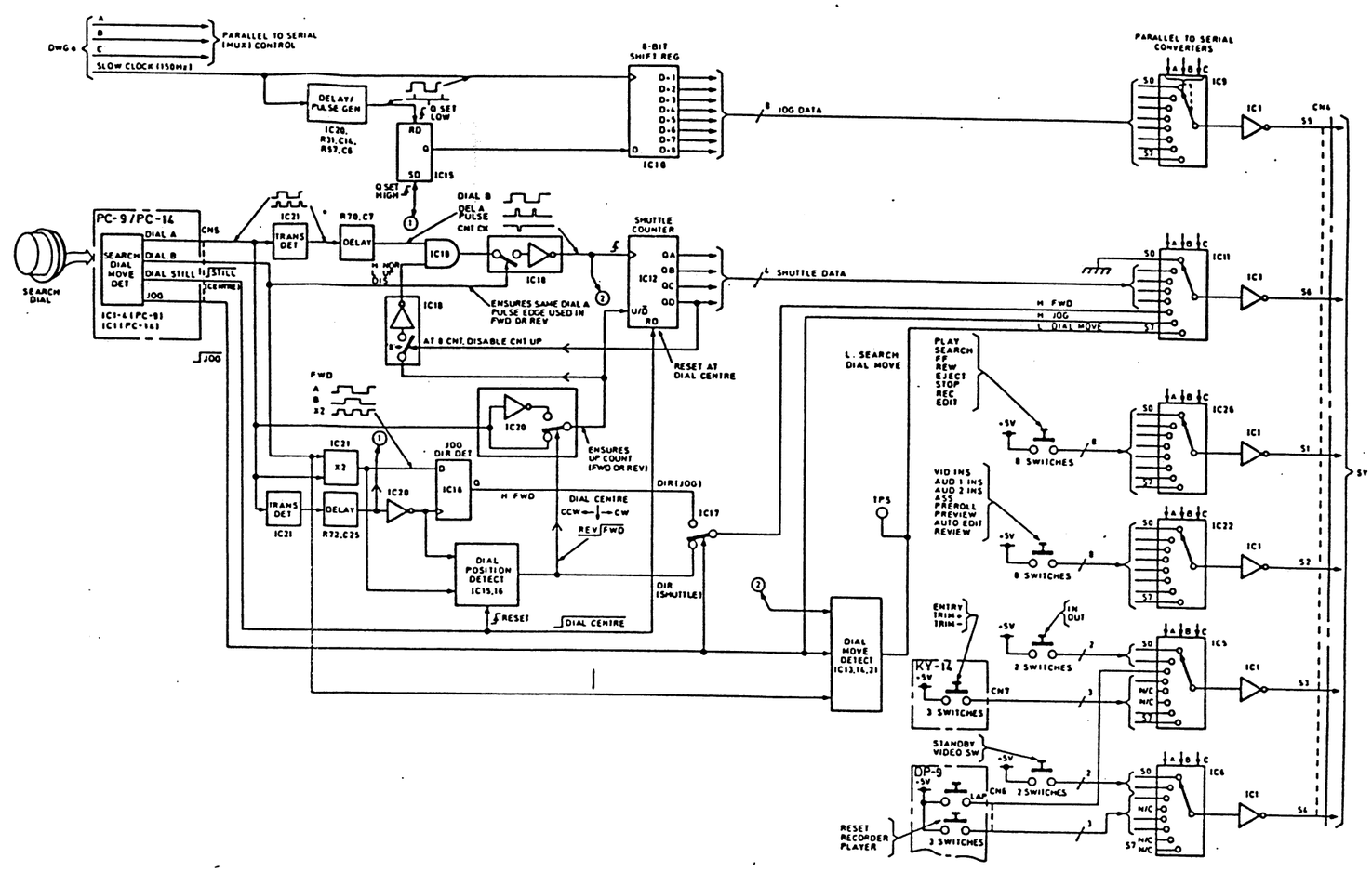

Fig. 3-13b Control Panel - Search Rate Detect and Signal Multiplex

FUNCTION SELECT CIRCUIT

The key function selector consists of multiplexers IC26, IC22, IC5 and IC6.

Multiplexer IC26 will be described first. This multiplexer is continually scanned by multi-clocks at TP2, 3 and 4. When any of the function keys are pressed, time division multiplexed data is output.

This time multiplexed data is fed to the SY-76A board where it is read by the data bus at IN0 timing (address 00F0H).

Output from the other multiplexers is read by the SY-79A data bus at the following timings.

IC22 ..... IN 1 (address 00F1H . RD mode)
IC5 ..... IN 2 (address 00F2H . RD mode)
IC6 ..... IN 3 (address 00F3H . RD mode)

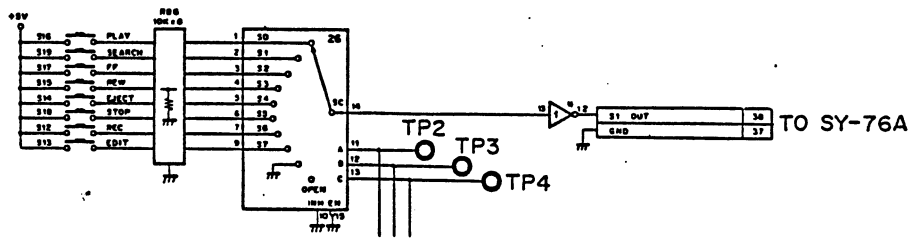

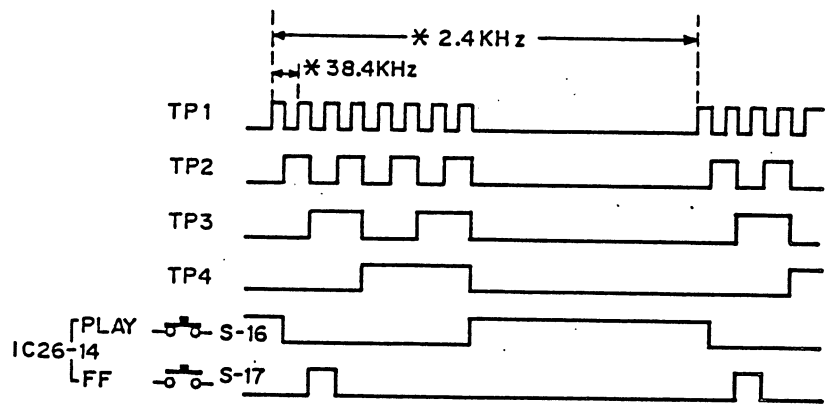

Fig. 2

Timing Generator IC7 and Lamp Driver

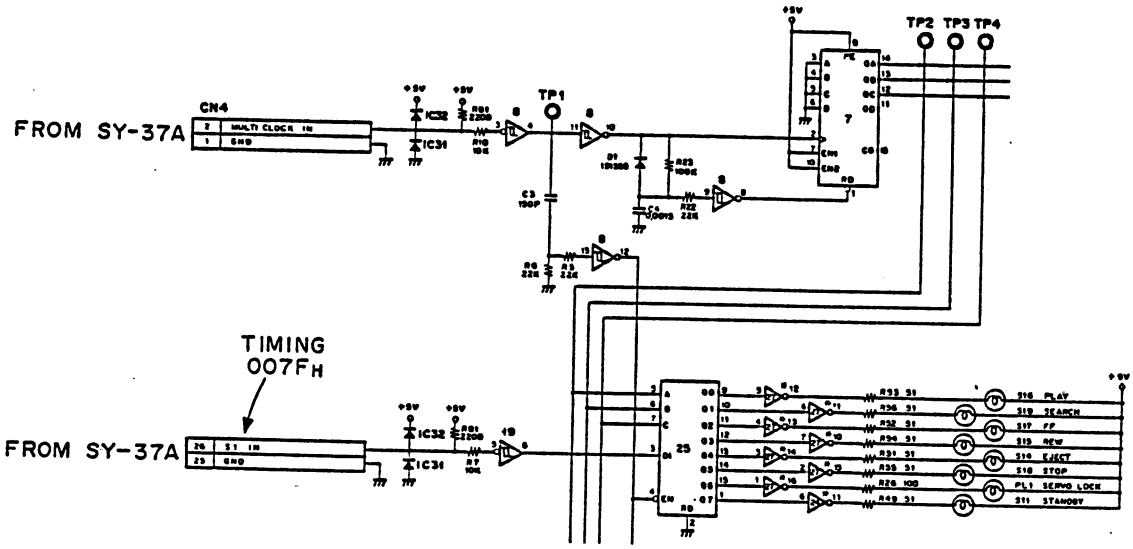

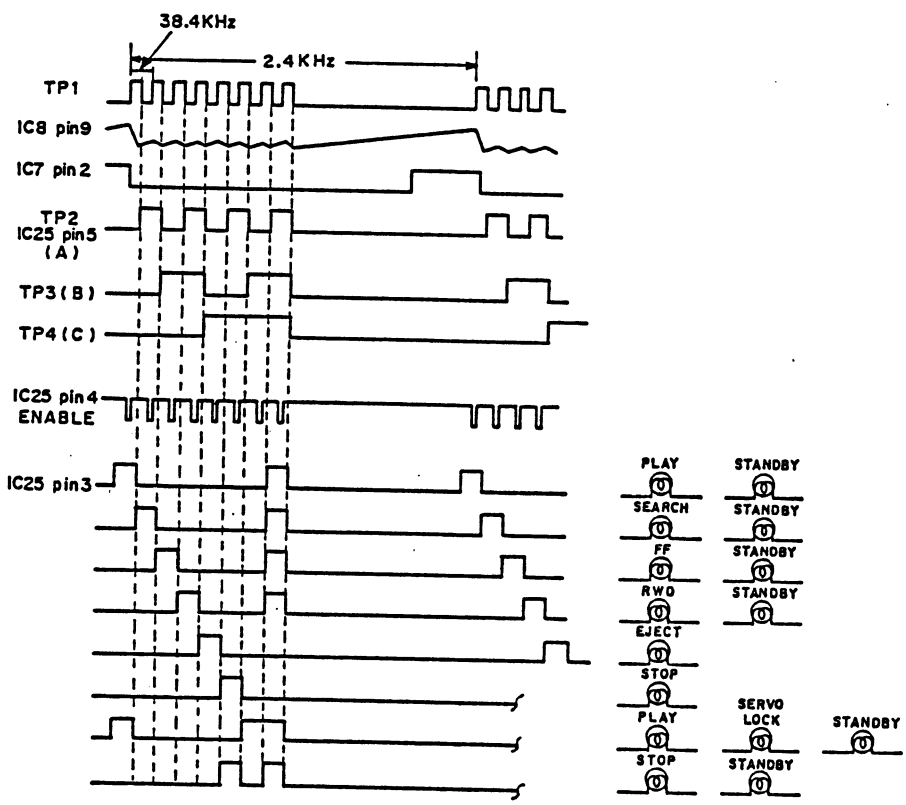

Fig. 1

Timing Generator

IC7 is the scanning pulse generator. The scanning pulse generated by IC7 is used to latch time multiplexed 8-bit function data, and to take out parallel data. It is also used to latch parallel data and to produce a time division multiplexed 8-bit signal.

Fig. 1 shows the IC7 input signal at TP1, and output signals at TP2, TP3 and TP4.

The multi-clock pulse at TP1 is generated by a main clock generator on the SY-37A board. This signal is obtained by gating the 1/128 (38.4kHz) clock and the 1/2048 (2.4kHz) clock of the 4.9152MHz X'tal.

Lamp Driver IC25

Lamp drivers IC25, IC4 and IC23 are located on the KY-9 board. IC25 will be described first. The lamp data for IC25 is sent from IC42 (multiplexer) on the SY-37A board. This lamp signal is time-division-multiplexed 8-bit data. Lamp data (8-bit) timing for IC25 (on the KY-9 board) is provided by the CPU at OUT7, that is, at address 00F7H. Lamp data for IC25 is shown in Fig. 1.

The STANDBY ON signal is continually being activated during the PLAY, SEARCH, FF and RWD modes.

The SERVO LOCK lamp lights during the PLAY mode under certain conditions.

All lamp data are latched by various clocks at TP2, TP3 and TP4 so as to light the lamps.

JOG DATA Detection Circuit

Speed data which is required by the JOG mode is generated by the search dial pulse.

Fig. 3 shows the timing when one pulse of the dial pulse is generated. IC10 is a shift register. Clock A is the 150Hz clock that is sent from pin 12 of IC23 (addressable latch).

The 150Hz slow clock is generated as shown below.

(Illust.)

When all STANDBY mode conditions are satisfied, a 150Hz slow clock is generated.

The shift register IC10's count data E is sent from a D-type flip-flop. As a result of this, one-clock (150Hz) dial data is generated from the 150Hz clock and dial data. The shift register produces output pulses D+1 through D+8 that are phase-shifted. This 8-stage dial data is time-division-multiplexed by multiplexer IC9 and becomes JOG data that is sent to the data bus on the SY-37A board. This JOG data is read by the CPU at IN4 timing (address 00F4H).

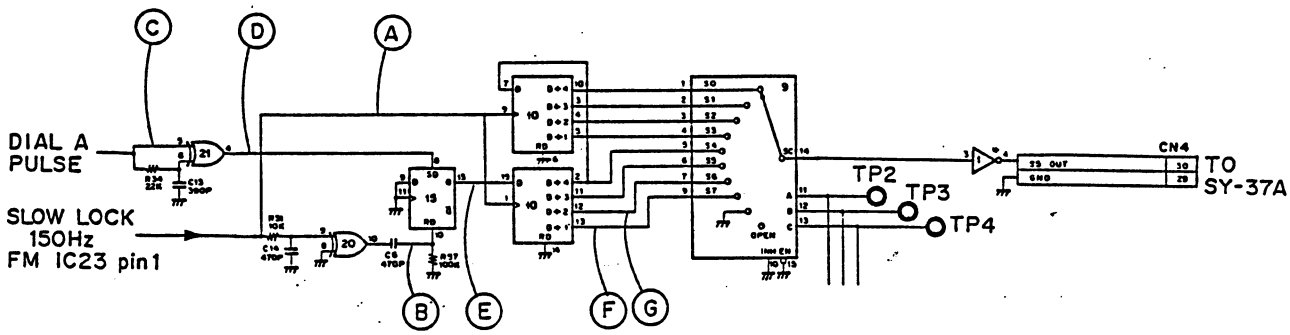

Fig. 3

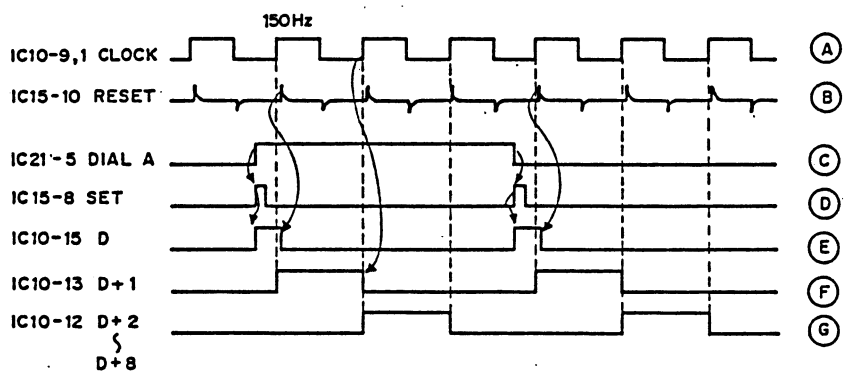

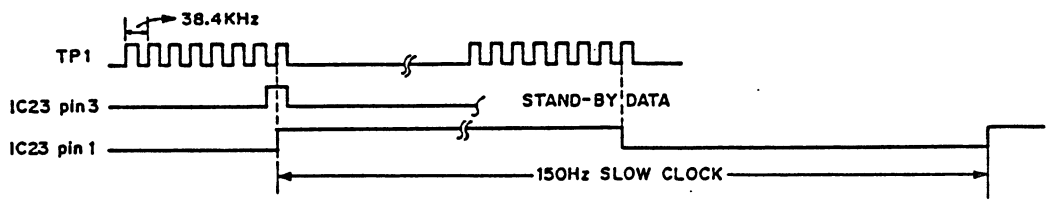

Fig. 4

FWD SENSE Circuit

As shown in Fig. 4 the FWD direction "H" is detected by the following conditions.

FWD = "H" = JOG mode . SEARCH DIAL/
CW + JOG . RVS . FWD

This FWD direction data is sent to pin 6 of multiplexer IC11.

This time-division-multiplexed data (5-bit) is read by the data bus on the SY-37A board. The read timing is at bit 5 of IN6 (address 00F6H). This FWD direction data is used for the FWD rotation of the capstan.

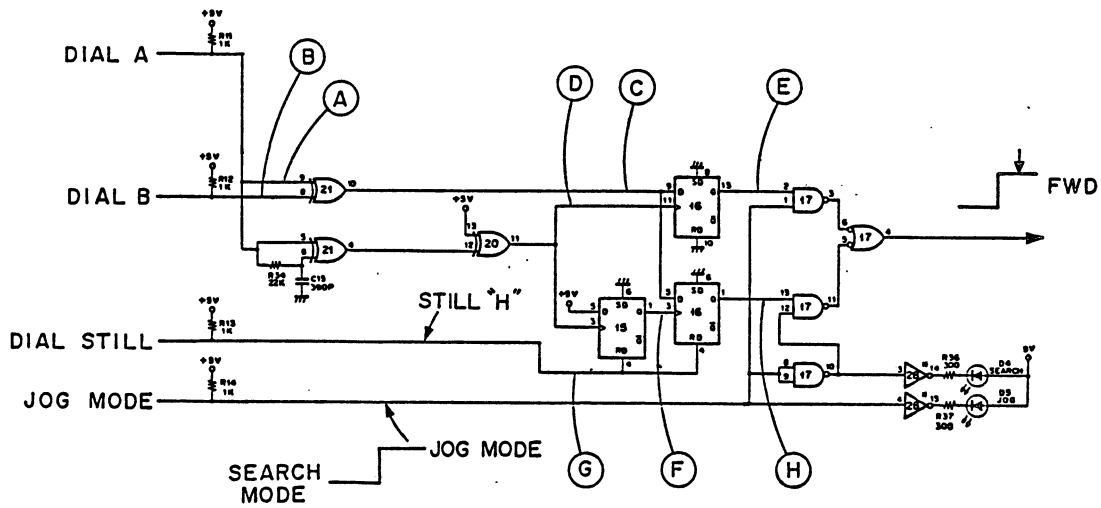

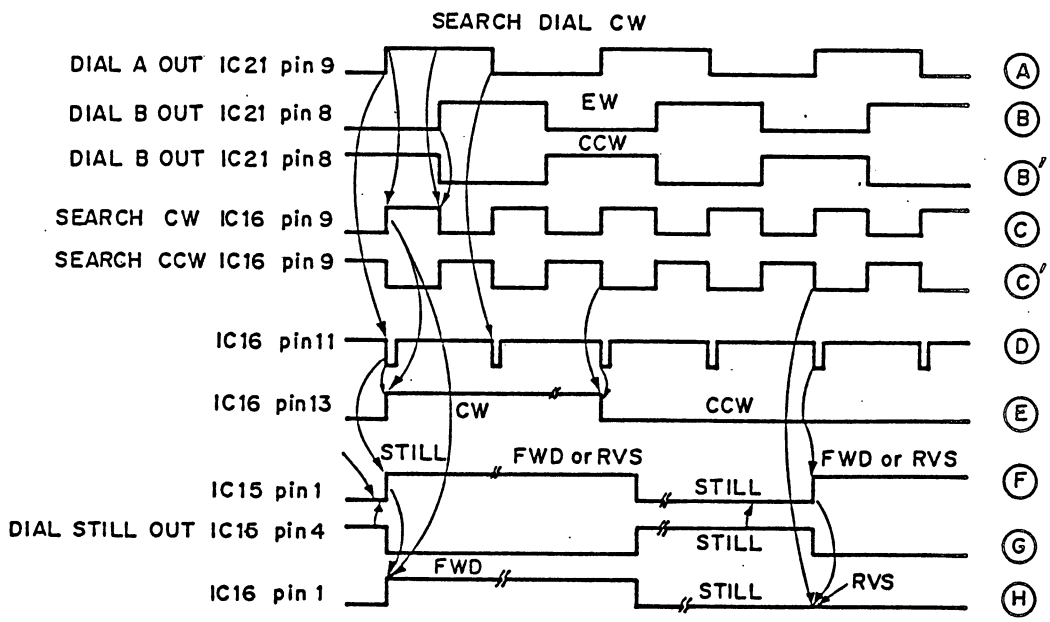

Fig. 4

SEARCH DIAL Information Generating Circuit

Fig. 5 shows the timing chart when the search dial is rotated in the FWD direction.

There are two types of search dial information at TP5. One type of information is the approx. 17ms wide - pulse output. This information is obtained at the generation of each search dial pulse. This signal informs the CPU that operations are being performed in the search mode. The other type of information is the identifying signal between the SEARCH and JOG modes. One - pulse having a 17ms width is generated at mode change-over timing. This informs the CPU on the SY-37A board that the current functional mode is the JOG mode.

Both the above types of information are time-division-multiplexed by multiplexer IC11, and are read by the data bus on the SY-37A board at a timing of IN6 (address 00F6H).

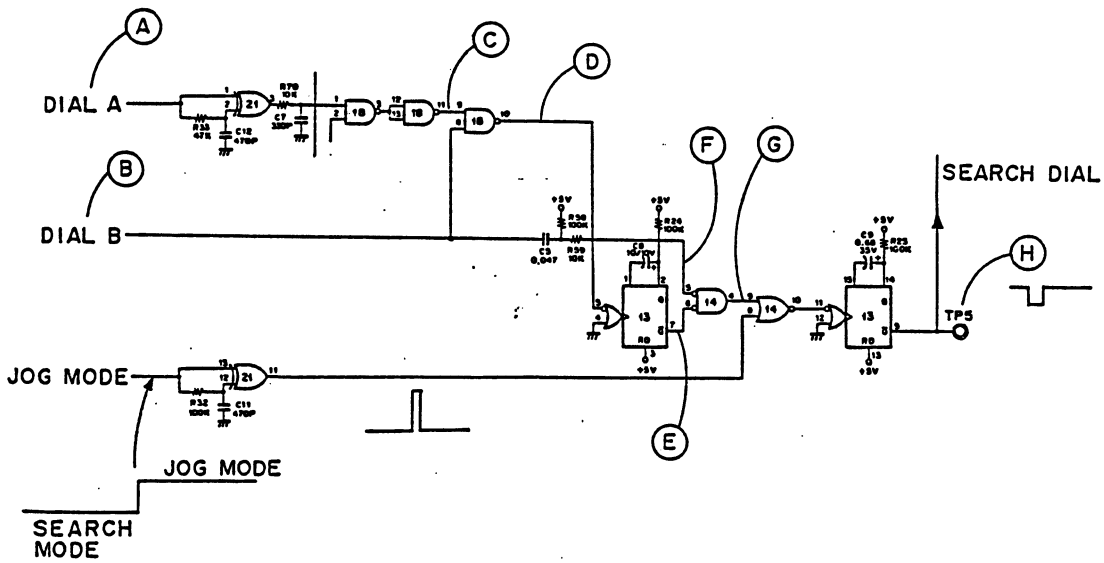

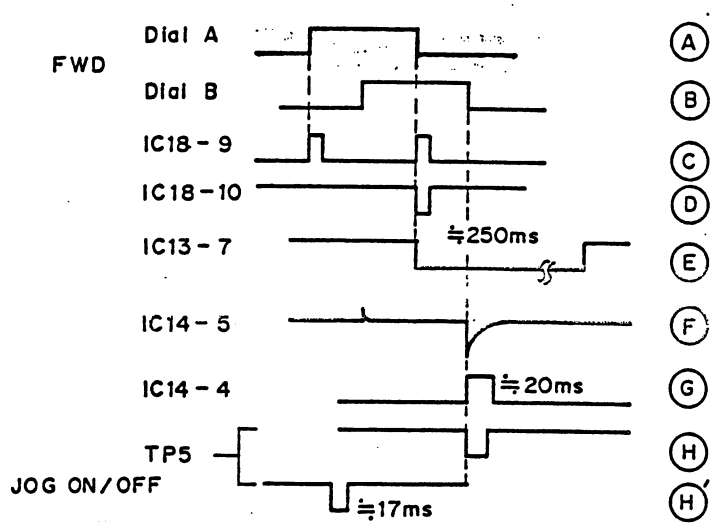

Fig. 5

SEARCH DATA Generating Circuit

This circuit generates speed information in the SEARCH mode. The SEARCH mode speed data is time-division-multiplexed by multiplexer IC11, and is read by the CPU on the SY-37A board at IN6 (address 00F6H). After this, it becomes search speed data.

IC12 is a 4-bit UP/DOWN counter. The search dial pulse is counted by this counter in order to find the search speed. The search dial has the following modes.

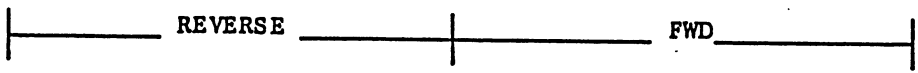

STILL

x10, x5, x2, x1, 1/2, 1/5, 1/10, 1/30 1/30, 1/10, 1/5, 1/2, x1, x2, x5, x10

The eight dial pulses, from the STILL position, in both directions, are counted by IC12. After eight pulses (x10 speed) are counted, the dial pulse is inhibited, by pin 2 of IC18, from counting any more dial pulses.

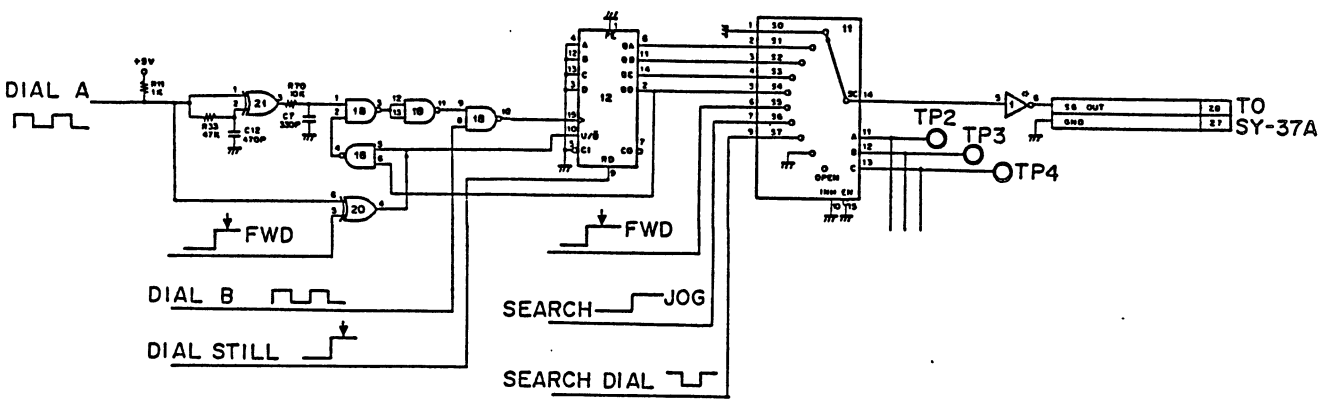

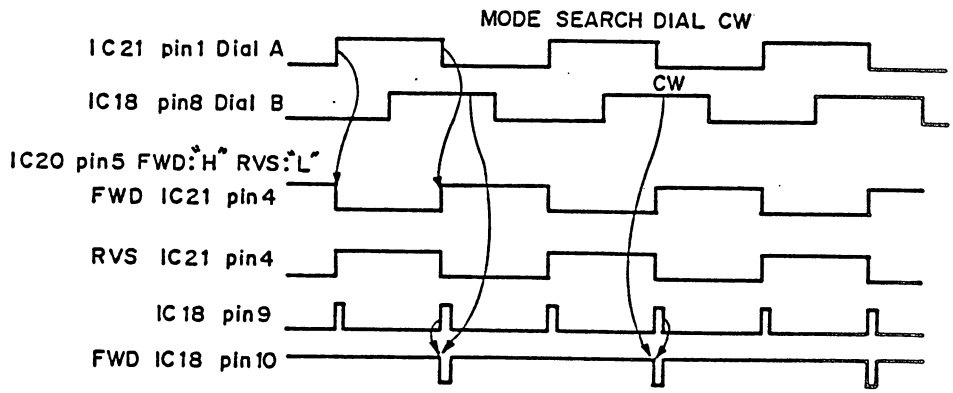

Display Control Circuit

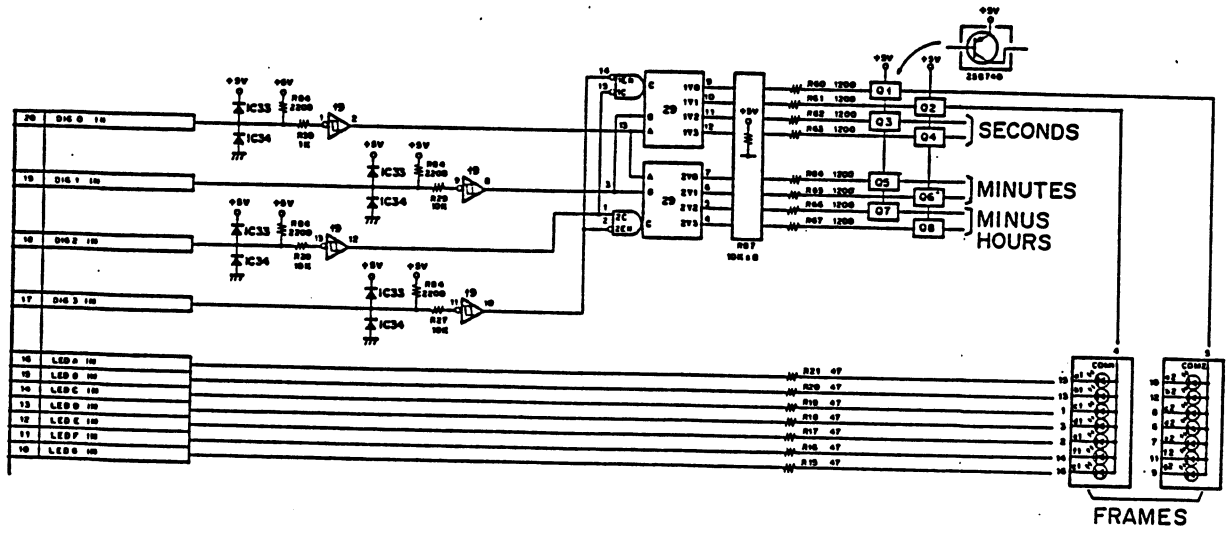

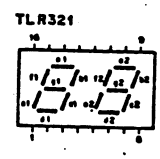

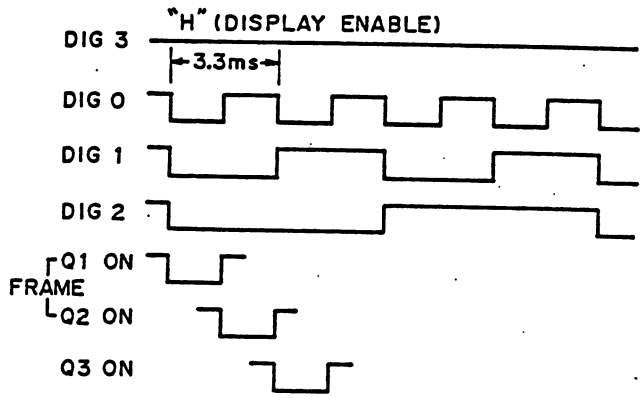

KY-9; FUNCTION KEY
KY-14; TRIM/ENTRY SW
DP-9; DISPLAY
PC-9; DIAL DETECTOR
PC-14; JOG DETECTOR

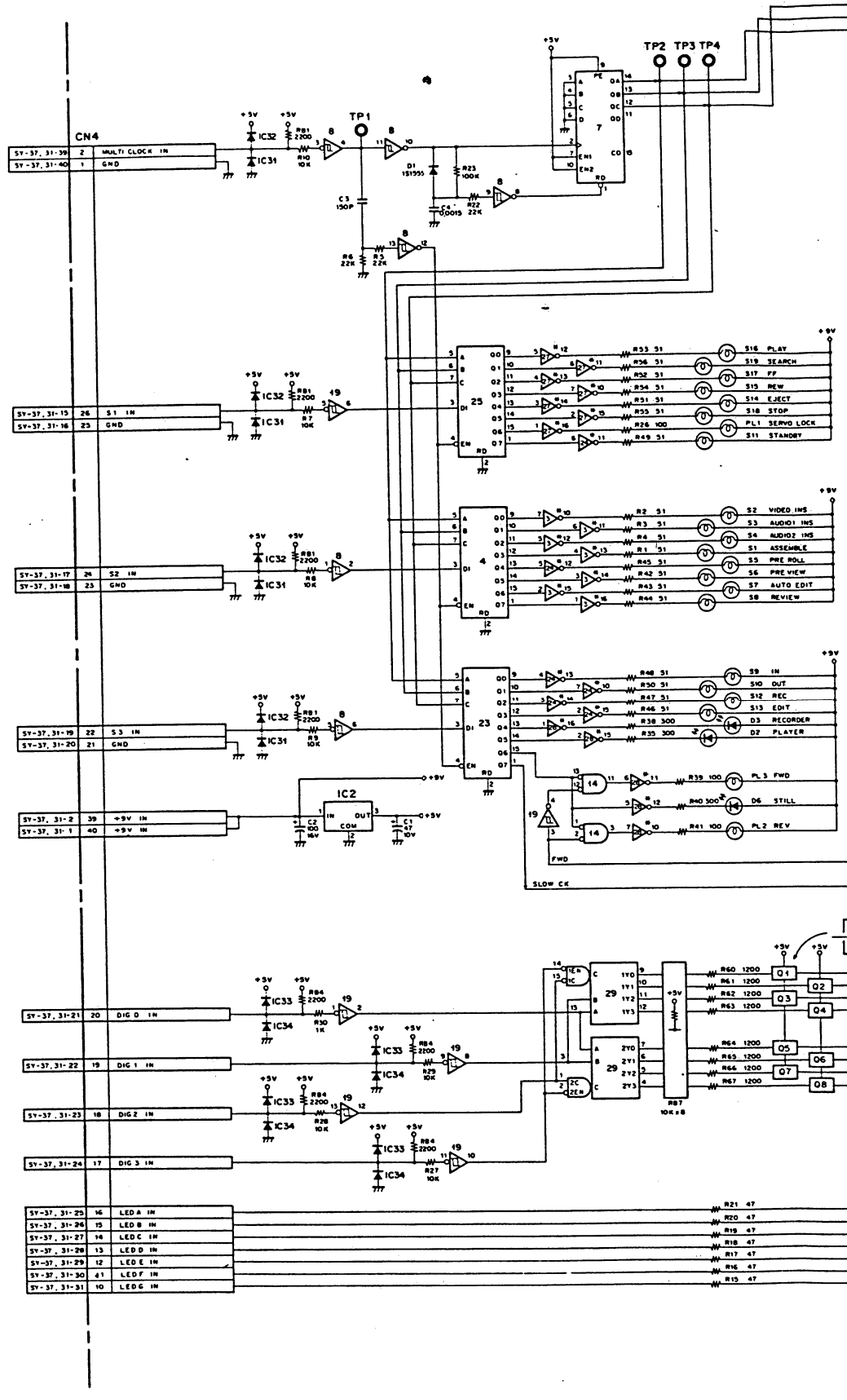

REF. NO	TYPE	PIN NO.	
		VDD/Vcc	GND
IC 1	SN74LS05N	14	7
IC 2	μPC7805H	–	2
IC 3	M54517P	–	8
IC 4	TC4099BP	16	8
IC 5	TC4512BP	16	8
IC 6	TC4512BP	16	8
IC 7	TC40161BP	16	8
IC 8	MC145848CP	14	7
IC 9	TC4512BP	16	8
IC 10	TC4015BP	16	8
IC 11	TC4512BP	16	8
IC 12	TC4516BP	16	8
IC 13	TC4528BP	16	8
IC 14	TC4001BP	14	7
IC 15	TC5040138P	14	7
IC 16	TC5040138P	14	7
IC 17	TC4011BP	14	7
IC 18	TC4011BP	14	7
IC 19	MC145848CP	14	7
IC 20	TC4030BP	14	7
IC 21	TC4030BP	14	7
IC 22	TC4512BP	16	8
IC 23	TC4099BP	16	8
IC 24	M54517P	–	8
IC 25	TC4099BP	16	8
IC 26	TC4512BP	16	8
IC 27	M54517P	–	8
IC 28	M54517P	–	8
IC 29	SN74LS156N	16	8
IC 30	–	–	–
IC 31	μPA64H	–	–
IC 32	μPA54H	–	–
IC 33	μPA54H	–	–
IC 34	μPA64H	–	–

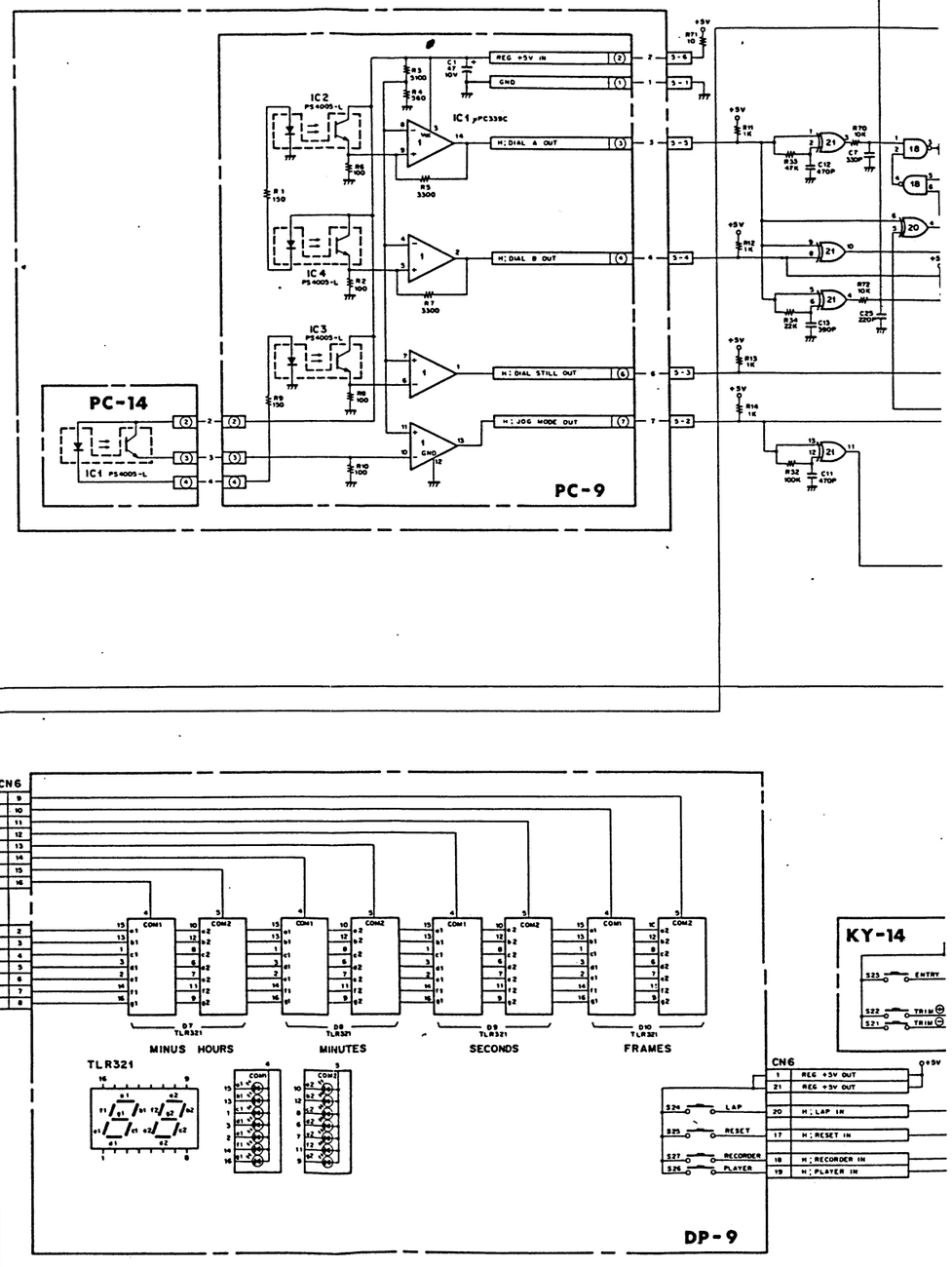

REF. NO	TYPE	PIN NO.	
		Vcc/Vdc	GND
IC 1	SN74LS05N	14	7
IC 2	μPC7805H	–	2
IC 3	M54517P	–	8
IC 4	TC40098P	16	8
IC 5	TC4512BP	16	8
IC 6	TC4512BP	16	8
IC 7	TC40161BP	16	8
IC 8	MC14584BCP	14	7
IC 9	TC4512BP	16	8
IC 10	TC4015BP	16	8
IC 11	TC4512BP	16	8
IC 12	TC4516BP	16	8
IC 13	TC4528BP	16	8
IC 14	TC4001BP	14	7
IC 15	TC5040138P	14	7
IC 16	TC5040138P	14	7
IC 17	TC4011BP	14	7
IC 18	TC4011BP	14	7
IC 19	MC14584BCP	14	7
IC 20	TC4030BP	14	7
IC 21	TC4030BP	14	7
IC 22	TC4512BP	16	8
IC 23	TC40098P	16	8
IC 24	M54517P	–	8
IC 25	TC40098P	16	8
IC 26	TC4512BP	16	8
IC 27	M54517P	–	8
IC 28	M54517P	–	8
IC 29	SN74LS156N	16	8
IC 30	–	–	–
IC 31	μPA64H	–	–
IC 32	μPA54H	–	–
IC 33	μPA54H	–	–
IC 34	μPA64H	–	–

KY-9
1-604-345-14
BVU-850P

MICROPROCESSOR BOARD SY-37 (Figs. 3-14a-d)

Section two of this manual described the functions provided by this board; this description therefore relates to individual details.

CPU, SIO, AND TIMING CONTROL (Fig. 3-14a)

CPU and System Timing

CPU and system timing is provided by a clock and baud rate generator. The CPU clock rate is 2.4MHz, and to permit system operation, the following signals are also provided:

a) 614.4kHz. Controls baud rate of SIO.

b) 38.4kHz. In conjunction with 2.4kHz, provides the multiplex clock signal. These signals permit the conversion to parallel of serial signals (see SV, RS or KY board descriptions).

c) 19.2kHz.
9.6kHz.
4.8kHz.
2.4kHz.
These signals are used for on-board parallel and serial conversion (multiplex and demultiplex).

d) 300Hz. This signal allows joy data checking (see Timing Control).

e) 150Hz. Termed 'Slow Clock', this signal is used (after conversion to serial - see Fig. 3-14d) to determine search dial movement in joy mode.

SIU

The SIU provides the interface between the CPU and the RS422 data of the Remote 1 connector. This data is in serial asynchronous form and the SIU converts this into parallel (and vice-versa). The protocol used ensures operation by 'question and answer' between the remote device e.g. another BVU-800/820 or BVH-2000 etc. The semiconductor switches within the transmit/receive (TX/RX) channels ensure correct routing of the data to allow machine use as a player or recorder. Control of this selection is provided by front panel Player/Recorder pushbuttons the state of which is 'read' by the CPU (see Fig. 3-14c).

The diagram shows that the SIO and the Interrupt Controller are connected (via Interrupt Enable In/Out pins) to form a priority 'Daisy Chain'. The highest priority device therefore is the SIU. This means that the servicing of SIU interrupts (Remote 1 data) always takes priority over the requirements of the Interrupt Controller (see Timing Control).

Timing Control

The generation and control of timing functions is provided by a Timing Controller and an Interrupt Controller. The Timing controller comprises five 16-bit counters which are controlled by the CPU and by Source and Gate inputs (only source 1 and 2 used). Another output - F OUT - is provided by a separate counter. Each counter provides outputs as follows:

a) F OUT. Control panel display demultiplex timing.

b) OUT 1. Timing used internally by CPU program (software).

c) OUT 2. As above (software).

d) OUT 3. Eight minute timer for tape protection (tension release etc).

e) OUT 4. 1Hz blink timer for control panel lamps.

f) OUT 5. Variable output frequency which determines search speed (via capstan servo).

The interrupt Controller manages up to eight maskable Interrupt Request signals; resolves interrrupt priorities; and provides a programmable response to the CPU for each interrupt. Inputs IR 1-5 allow the CPU to provide the functions described previously for the Timing Controller F OUT and OUT 1 to 4 signals. The remaining IR inputs are as follows:

a) IR0. Informs the CPU when Colour Framing is correct (for transmission to an edit controller via the SIO).

b) IR6. Allows CPU to read Joy data at 300Hz rate.

c) IR7. 25Hz clock rate at which CPU reads timer data from TC board.

NOTE. The Chip Select (CS) inputs of the SIO, Timing and Interrupt Controllers are each enabled by decoded I/O Request addresses as shown. CS however affects only the writing or reading of control or data between the CPU: it has no affect on device operation once configured by the CPU.

RS-422 Remote Interface IC9, IC10, IC70 and IC71

This remote interface is used to perform remote communication using the RS-422, that is, remote control between the BVU-850 series and the BVE-800s.

The editing system using two different BVU-850 series models will be described here.

When the BVU-850 REMOTE/LOCAL select switch is set to LOCAL using the BVU-850P as a master VTR (LOCAL VTR), a recorder IN signal (low) is input. As a result, IC9 and IC10 are turned on. At this time, since the BVU-850P is being used as a master unit, the control panel information from a serial IN/OUT interface (SIO) is output from pins 2 and 3 of IC9 to the slave VTR (remote VTR) as an X MIT OUT signal. The slave VTR REMOTE/LOCAL select switch is set to REMOTE, and the 9-pin/36-pin REMOTE select switch is set to the 9-pin. Data obtained when each select switch is set to REMOTE and 9-pin, respectively, is read by the data bus on the SY-37A board at a timing of IN7 (address 00F7) and IN8 (address 00F8H).

Player information is output from bit 5 (IC32) of OUT4 (address 00F4H). This information enables IC70 and IC71 in the slave VTR to be turned on. Data from terminals 13A and 14A is fed through IC71 to SIO RXDB. The BVU-850P reads operation status data from the slave VTR as the RXDB signal through SIO to recognize slave VTR operation. This enables full-duplex communications.

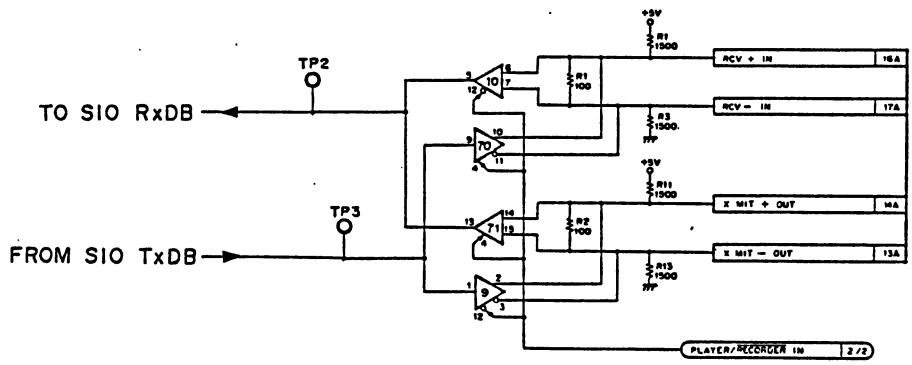

Clock Generator

This circuit generates clocks which synchronize various data handling devices. These clocks are mainly used as follows.

2.46MHz: x1, x1/2
Used for CPU, SIO and STC (System Timing Controller).

0.61MHz: x1, x1/8
Used for an SIO RECEIVE/TRANSMIT clock.

38.4kHz: x2, 1/128
Used as a multi-clock.
(Used for latching lamp and key data on the KY-9 board.)

19.2kHz: x1, x1/256
9.6kHz: x1, x1/512
4.8kHz: x1, x1/1024
Used as a data latch address between the SY-37A and KY-9 boards.

2.4kHz: x1, x1/2048
Used for multiplexer data latch (INH) on the SY-37A board. Also used as a multi-clock.

150Hz: x1
Used as a clock for the JOG data generating circuit on the KY-9 board.

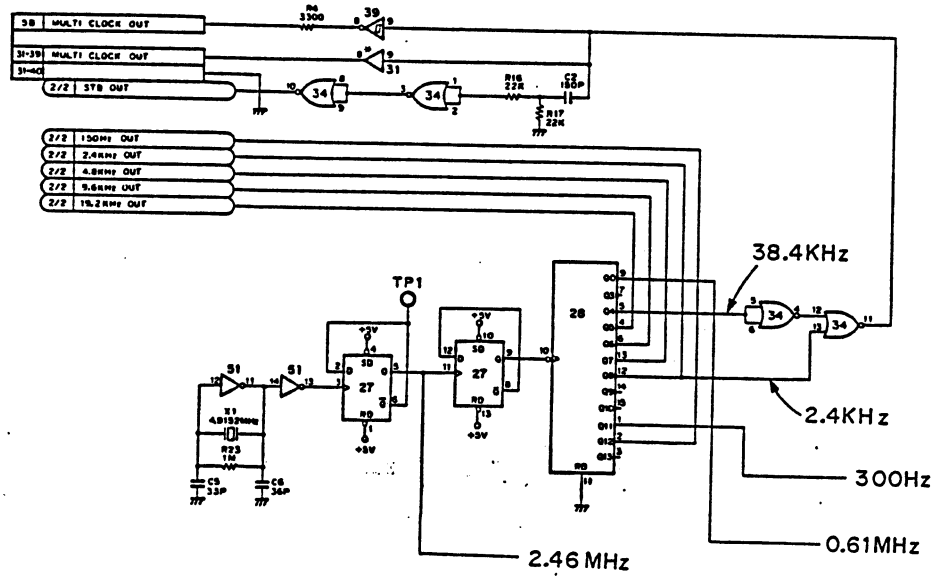

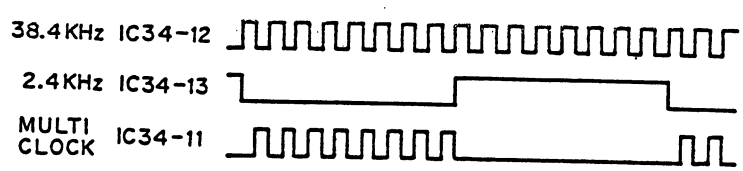

CPU Reset Generator

A CPU reset pulse is sent to the CPU approximately 0.8 second (using a 47uF capacitor C3) after the main AC power is turned on. The CPU reset pulse can also be generated using switch S1.

Moreover, the 9V-power timing is delayed by controlling Q1 and Q2.

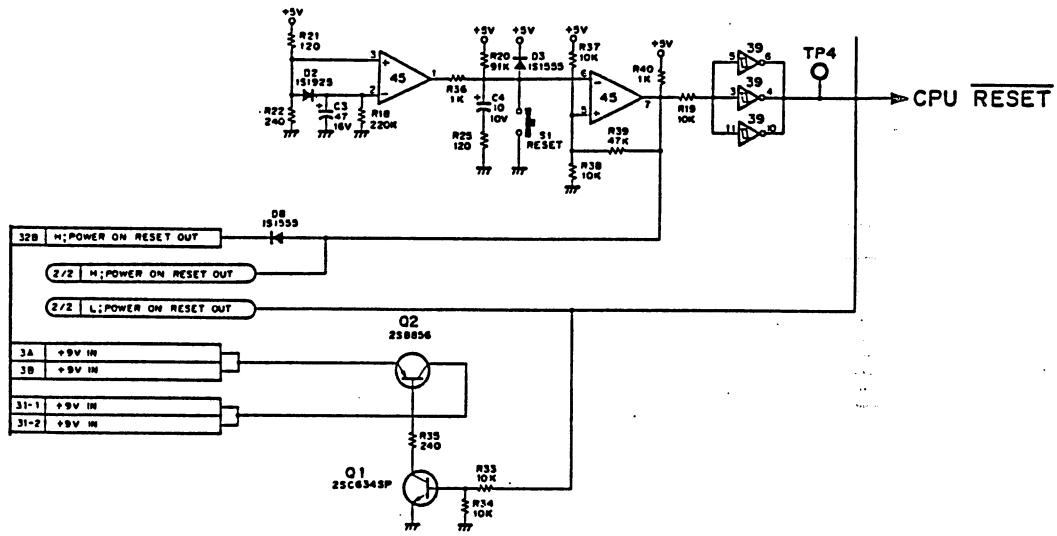

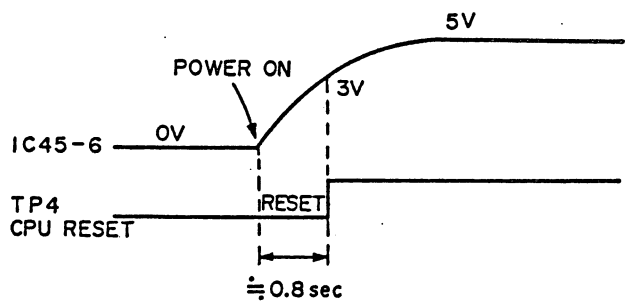

Serial IN/OUT Interface (SIO)

LH0084 is an input/output controller for serial communication purposes. The serial data pulse train which is sent from an externally connected VTR, editing machine and remote controller is converted into 8-bit parallel data and fed to the CPU. Moreover, the contents of an 8-bit data bus on the CPU are externally sent in sequence to the data line as serial data together with the time.

(Example)

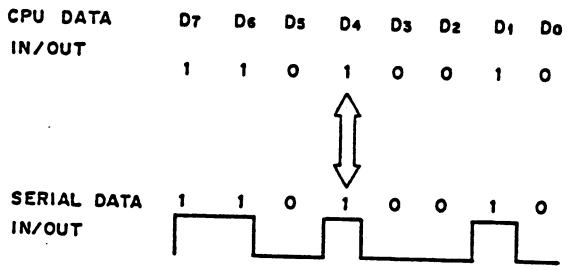

System Timing Controller (STC)

This STC generates timing data to control Universal Interrupt Controller (UIC) IC5 to interrupt and control the CPU.

It is also used as a timer to interrupt the UIC.

(1) This timer vector is assigned during power on.

(2) This timer is used as an 8-min. timer. 8-min. data setting is performed using D0 through D7. O1 through O4 are fed to UIC.

D1 through D4 interrupt the UIC. D5 controls the capstan motor speed.

Universal Interrupt Controller (UIC)

INT is sent to the CPU using the interrupt data (timer OUT) from STC. Then, the CPU receives IACK. Data from the UIC is output to D0 through D7. At this time, CPU "JUMP". ROM data is output to the CPU.

LH0084 (SHARP)
N-MOS 2-CHANNEL SERIAL INPUT/OUTPUT FOR MICROCOMPUTER SYSTEM
— TOP VIEW —

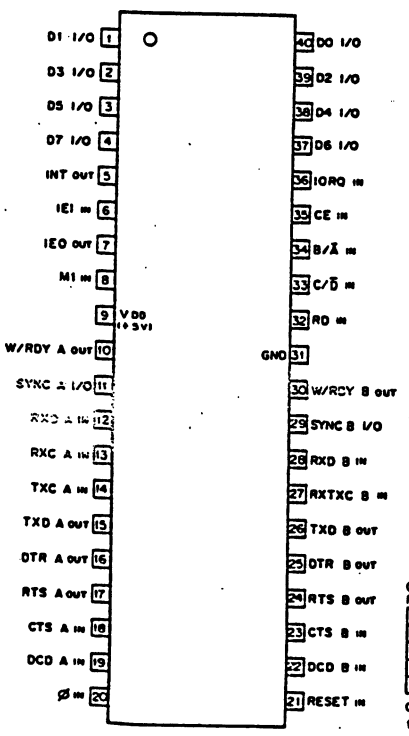

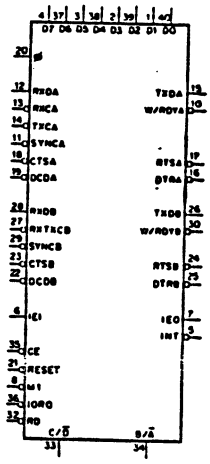

CHANNEL SELECT FUNCTION TABLE

C/D̄	B/Ā	FUNCTION
0	0	CH-A DATA
0	1	CH-B DATA
1	0	CH-A CONT. WORD
1	1	CH-B CONT. WORD

0; LOW LEVEL
1; HIGH LEVEL

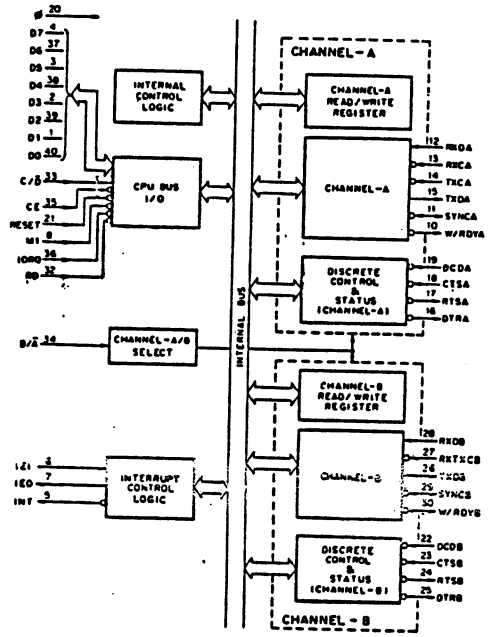

Ø	; SYSTEM CLOCK IN	RXD	; RECEIVE DATA IN
D7-D0	; DATA I/O	RXC	; RECEIVE CLOCK IN
C/D̄	; CONTROL/DATA SELECT IN	TXC	; TRANSMIT CLOCK IN
CE	; CHIP ENABLE IN	TXD	; TRANSMIT DATA OUT
M1	; MACHINE CYCLE 1 IN	SYNC	; EXTERNAL CHARACTER SYNCHRONIZATION I/O
IORQ	; I/O REQUEST IN	W/RDY	; WAIT/READY OUT
RD	; READ IN	DCD	; DATA CARRIER DETECT IN
B/Ā	; CHANNEL B/A SELECT IN	CTS	; CLEAR TO SEND IN
IEI	; INTERRUPT ENABLE IN	RTS	; REQUEST TO SEND OUT
IEO	; INTERRUPT ENABLE OUT	DTR	; DATA TERMINAL READY OUT
INT	; INTERRUPT OUT		

THEORY OF OPERATION

3-1. Z80 (CPU)

The Z80 has 40 pins, and they are arranged as follows:

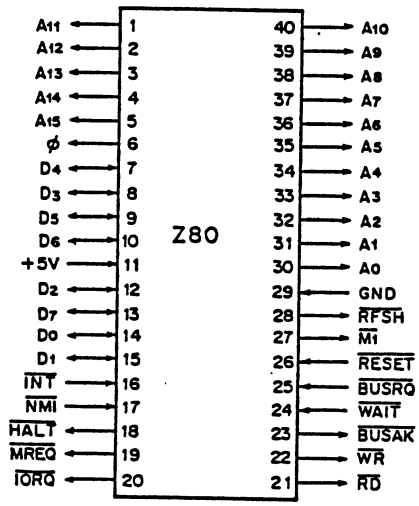

3-1-1. Functions of Pins

① A0 to A15 (Address bus)

A bus line which outputs addresses when reading and writing of the memories and input/output operations.

② D0 to D7 (Data bus)

A bus line which reads and outputs the data.

③ $\overline{MREQ}$ and $\overline{IORQ}$

$\overline{MREQ}$ is output when accessing to memory, and $\overline{IORQ}$ is output when accessing to I/O port.

④ $\overline{RFSH}$

Dynamic RAM (for example 4116) is not able to memorize unless it is refreshed at certain time intervals. $\overline{RFSH}$ is the timing signal for this refreshing purpose.

⑤ $\overline{M1}$

It indicates a cycle in which the CPU reads out a command to the exterior.

⑥ $\overline{HALT}$

It is a signal which informs the outside that the HALT (STOP) command has been executed and that CPU has ceased the carrying out of the program. This HALT will continue until it is interrupted or reset.

⑦ $\overline{WAIT}$

This is a signal which awaits the CPU processing until the peripheral device has completed its operations, since the peripheral device cannot catch up with the processing speed of the CPU.

⑧ $\overline{INT}$ and $\overline{NMI}$

They are input pins for interruptions.

$\overline{NMI}$ enables interruption at any time.

$\overline{INT}$ enables prohibition of interruption in accordance with contents of a program.

⑨ $\overline{RESET}$

A pin which initializes the CPU.

⑩ $\overline{BUSRQ}$ and $\overline{BUSAK}$

$\overline{BUSRQ}$ is a pin which requests the CPU to disconnect addresses and data buses from the CPU.

$\overline{BUSAK}$ is a pin which informs the exterior that the CPU accepts the BUSRQ.

⑪ $\overline{RD}$ and $\overline{WR}$

$\overline{WR}$ signal is output when writing is performed for the memory or I/O devices.

$\overline{RD}$ signal is output when reading is performed for the memory or I/O devices.

3-1-2. Operation of Z80

When power supply of the Z80 is turned ON, RESET signal is fed to it to clear out its internal memory contents.

The RESET pin of the Z80 becomes active when set at "L". Therefore, when "L" signal is applied to it, the pins of the Z80 are established as follows:

[Address and data bus]

Both become "H" level. (Floating condition)

[Control pins]

All the control pins output non-active signals. The signal level of these pins when the Z80 is in active mode is "L" level; therefore, in this state, the Z80 outputs "H" level.

[Program counter]

The contents of the program counter become 0000H.

[Interruption enabling flip-flop]

Becomes zero and becomes prohibition of interruption.

[Interruption mode]
The interruption mode becomes zero.
[Interruption pag address register]
The contents of I register become 00H.
[Refresh register]
The contents of R register become 00H.
[Register file]
The contents of all registers such as A, B, C, D, E, F, A', B', C', D', E', F', IX, IY, H, L, and R become 00H.
When $\overline{\text{RESET}}$ becomes "H" from "L", the Z80 starts to execute operation of the program; however, the contents of the program counter (PC) become command fetch address. This means that the operation code comes from the 0000H address. The Z80 fetches the operation codes when it internally becomes into "a condition to execute operation fetch codes".

At first, the contents of the program counter (PC) are output, and then the contents of the refresh register (R) are output after the Z80 fetches the operation code.

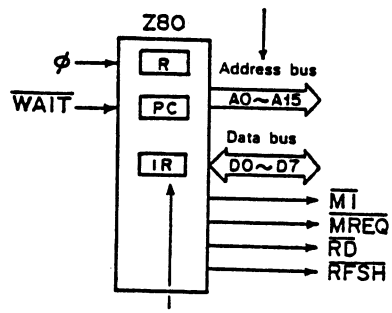

From the address of the memory, which is specified by the program counter, a part of the operation code is fetched to the command register (IR).

3-1-3. M1 Cycle

A sequence to fetch an operation code is called M1 cycle.

① When The Z80 becomes M1 cycle.

② During the interval between the arrivals of the first clock signal and the second clock signal (it is called T1 state), the contents of the program counter are output to the address bus.

③ When it is also in the T1 state, "L" is output to $\overline{\text{M1}}$. At this time, the Z80 is operating in M1 cycle, and it plays a role to inform the outside that an address to fetch the operation code on the address bus is being output.

④ When it is also in the T1 state,"L" is output to $\overline{\text{MREQ}}$ and $\overline{\text{RD}}$.
Access the memory with these signals and fetch the operation code (to the command register).

⑤ When it is in the T2 state, if an xternal input to $\overline{\text{WAIT}}$ pin of the Z80 is "H", the Z80 moves to T3 state. If the $\overline{\text{WAIT}}$ pin is in "L" level, the Z80 does not move to T3, but it becomes in wait state (TW), and waits until it becomes "H".

⑥ At a point when the Z80 moves to T3 state from T2 state, it fetches the operation code, which is read out on data bus (D7 to D0) from the memory, to the command register (when the clock of T3 is being raised up).

⑦ In T3 state, $\overline{\text{MREQ}}$ becomes at first "H" and then returns to "L" again.

⑧ In T3 state, the contents of the refresh register are output to the address bus. However, among the 8 bits of the refresh register, the lower 7 bits are output to the lower 7 bits of the address bus.
To indicate that the refresh address is being output to the address bus, "L" is output to $\overline{\text{RFSH}}$ pin.

⑨ When the Z80 becomes in T4 state, the $\overline{MREQ}$ signal returns to "H" from "L".
It becomes possible to refresh the dynamic memory with the $\overline{MREQ}$, $\overline{RFSH}$ and the address bus.

⑩ In the following Fig., up to the T4 state shows an operation code fetch cycle. The place marked 10 denotes the T1 state in a cycle whichever comes next. (It depends on the command fetched immediately before.)
Up to this point, the refresh address has been output to the address bus, and $\overline{RFSH}$ signal which indicates the abovementioned state has been set at "L". However, the $\overline{RFSH}$ signal also becomes "H" simultaneously when the refresh address on the address bus disappears.

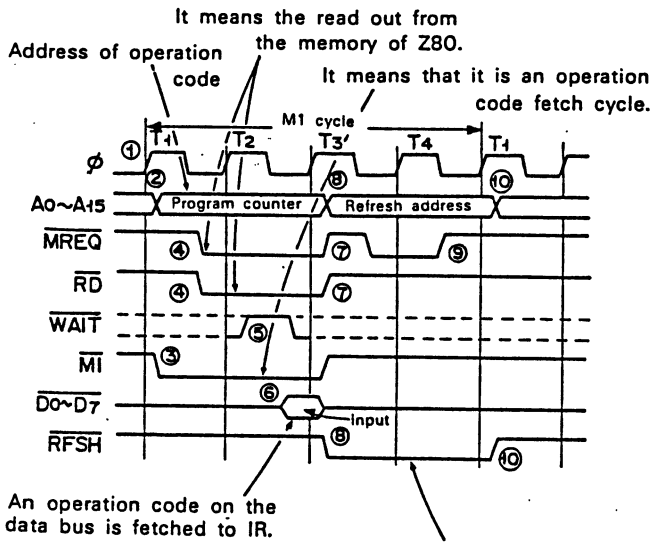

Command OP code fetch cycle (M1 cycle)

3-1-4. Refresh Cycle

Refresh cycle is an indispensable and troublesome operation for DRAM. The memorized contents of the memory will be erased unless the specified row address is not accessed within the determined length of time. The term of row address access used here means that only row address and $\overline{RAS}$ are necessary. Accordingly, even in a normal read cycle and a write cycle, refresh has been completed against their row addresses. The Z80 CPU outputs address in T1 and T2 of the OP code fetch cycle and indicates the output to the memory, and it fetches OP code at the clock rising up of T3, and performs refresh of the dynamic memory at the rest of 2 states (T3 and T4).

There are two methods of refreshing. The first method is to refresh the 128 row addresses continuously (Burst mode refreshing) and the other is a dispersing method to refresh each row within 2ms (Single mode refreshing).

The Z80 is so designed as to be refreshed by conveniently using the latter method.

For the Z80, refreshment is performed so that a row address is refreshed once every M1 cycle. During the refreshing operation, $\overline{CAS}$ output is kept at H level.

Simultaneous refreshing is possible even if the data outputs of several memories are connected with the wired OR. The refreshing operation is a quasi read operation, and data in the memory is not output at that time.

The refreshing operation using only $\overline{RAS}$ is called $\overline{RAS}$ only refreshment. Driving of refreshing cycle of the dynamic memory can be performed by the $\overline{RFSH}$ and $\overline{MREQ}$ signals.

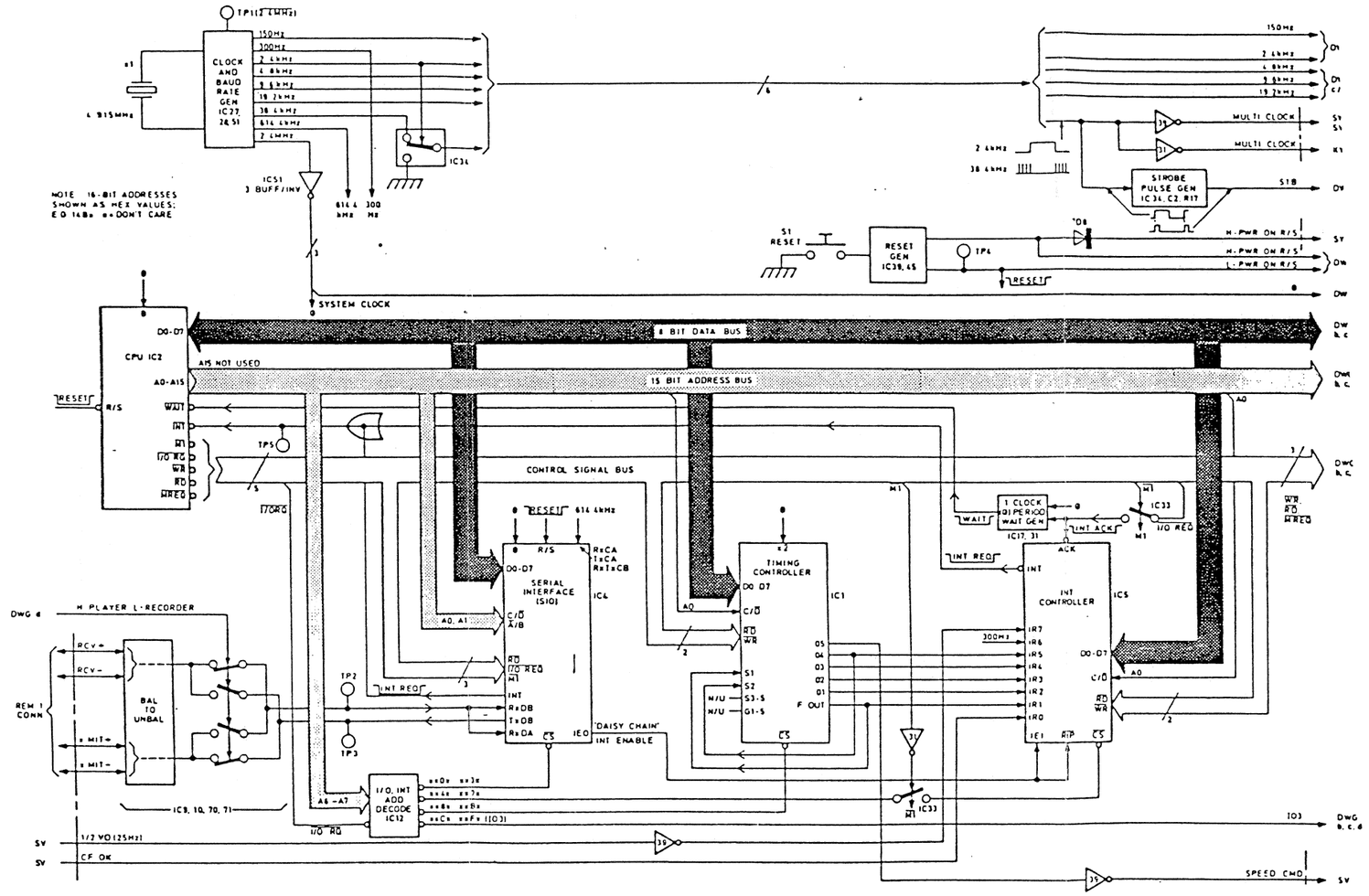

Fig. 3-14a Microprocessor Board SY-37 - CPU,Serial I/O and Timing Control

MEMORY AND I/O DECODE (Fig. 3-14b)

PROM and RAM Memory

Programmable Read-Only Memory (PROM) is non-volatile i.e. it retains its contents with power down. PROM therefore contains the CPU program data. This data is read by the CPU using a true Read (RD) signal (low), a low Memory Request (MREQ) signal and decoded addresses as shown in the diagram. The CPU routines conducted by program are as described within section two.

Random Access Memory (RAM) is volatile and is used only for system data i.e. that which is related to machine operation and is constantly changing. RAM is enabled in a manner similar to PROM but as writing to memory is required the CPU Write (WR) signal is introduced.

I/O Decode

The input/output (I/O) decoder individually enables each of the I/O ports (see Figs. 3-14c/d) which allow, under CPU control, system control data to be output e.g. mode commands; display information; status information to Control Panel lamps etc., or input e.g. mode requirements - from Remotes 1/2 and mode status from Function Control Board SY-36 etc. Signals IN 0-11 enable input ports 0-11, while signals OUT 0-9 enable output ports 0-9.

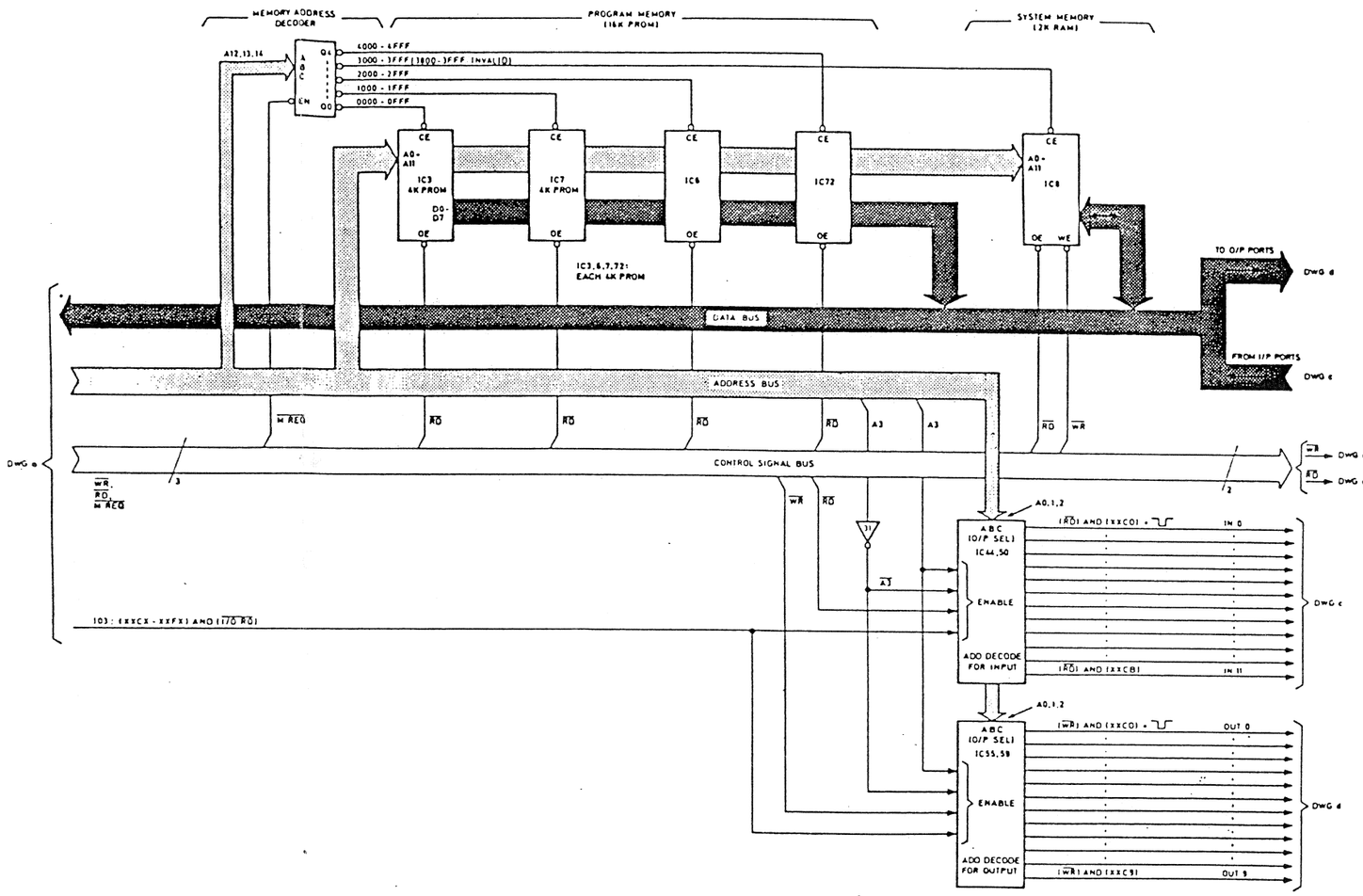

Fig. 3-14b Microprocessor Board SY-37 - Memory and I/O Decode

INPUT PORTS (Fig. 3-14c)

All of the ports shown on this diagram provide for the input of data to the CPU. The lower group provide serial-to-parallel conversion (demultiplex) of data provided by the Control Panel. This is achieved by means of 8-bit data latches each bit of which is selected by the 19.2, 9.6, and 4.8kHz signal (i.e. synchronous with those used by the Control Panel for multiplexing) and the Strobe (STB) signal. It should be noted that an extra board connector (CN32) is provided to allow a separate Control Panel (BK-801) to be used while retaining the original panel with the machine. Switch S3 selects commands input via connector CN32 (instead of CN31), status and display outputs are permanently enabled.

The upper group of ports each allow for the parallel input of mode/status requirements from sources shown.

Each port is output-enabled by one of the IN 0-11 signals (see Fig. 3-14b).

Switch S5 allows for the EIA (60Hz) or CCIR (50Hz) selection for the Timer/Timecode Display, and for diagnostics selection. Switch designations are:

SW5	OFF	ON
1	EIA(60Hz)	CCIR(50Hz)
2	TEST (DIAGNOSTICS)	NORMAL
3	I/O PORTS	MEMORY FLAGS
4	OUTPUT PORTS	INPUT PORTS
5	Switches allow selection of I/O ports (IN 0-11 or OUT 0-9) via a 4-bit binary code. SW5-8 = LSB SW5-5 = MSB. SW ON = 0; SW OFF = 1.	
6		
7		
8		

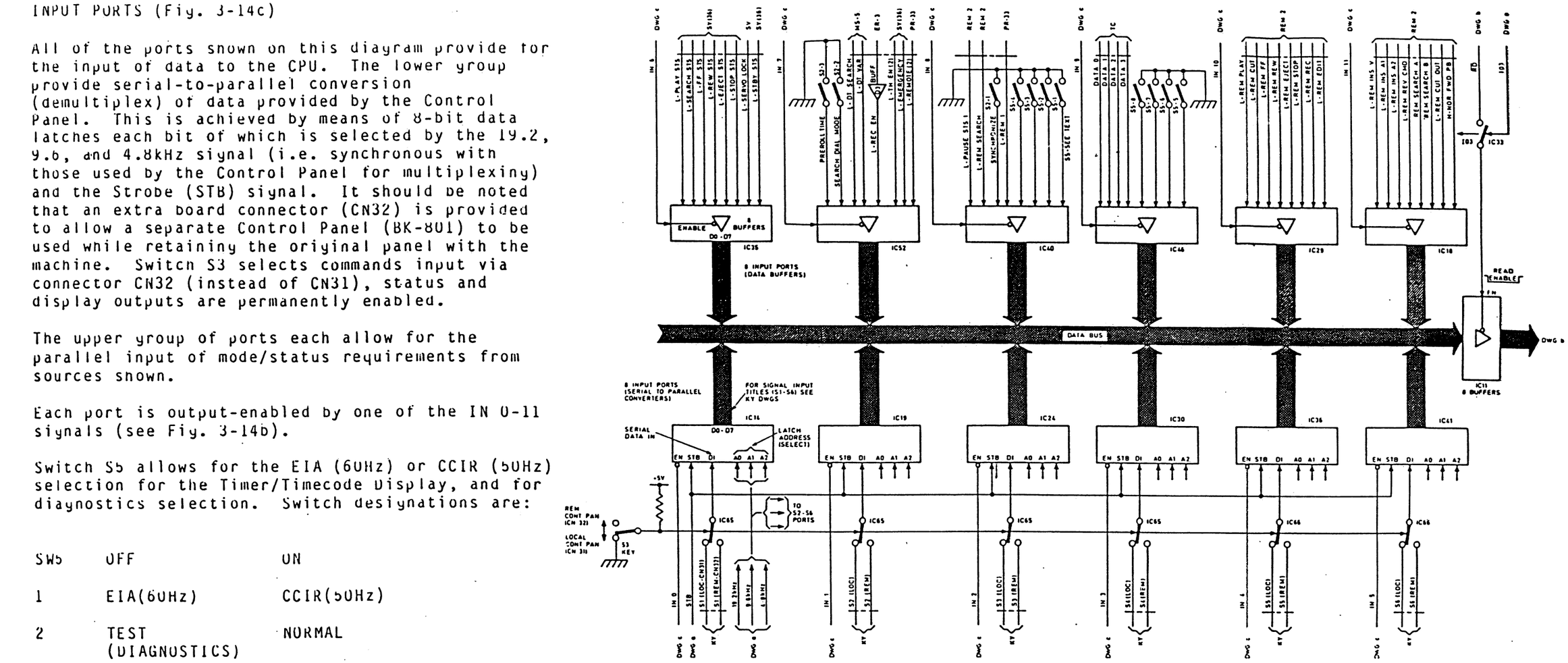

Fig. 3-14c Microprocessor Board SY-37 - Input Ports

OUTPUT PORTS (Fig. 3-14d)

The ports shown on this diagram provide for the output of data from the CPU. All of the ports shown first latch the CPU data using the 2.4MHz system clock and the appropriate address signal (OUT 0-9), and, either output the data in parallel form, or provide conversion to serial . Data conversion to serial form is performed by multiplexers which provide bit selection under the control of the 19.2, 9.6, 4.8 and 2.4kHz clock signals. These are synchronous with those used for the demultiplex process on the SV and KY boards.

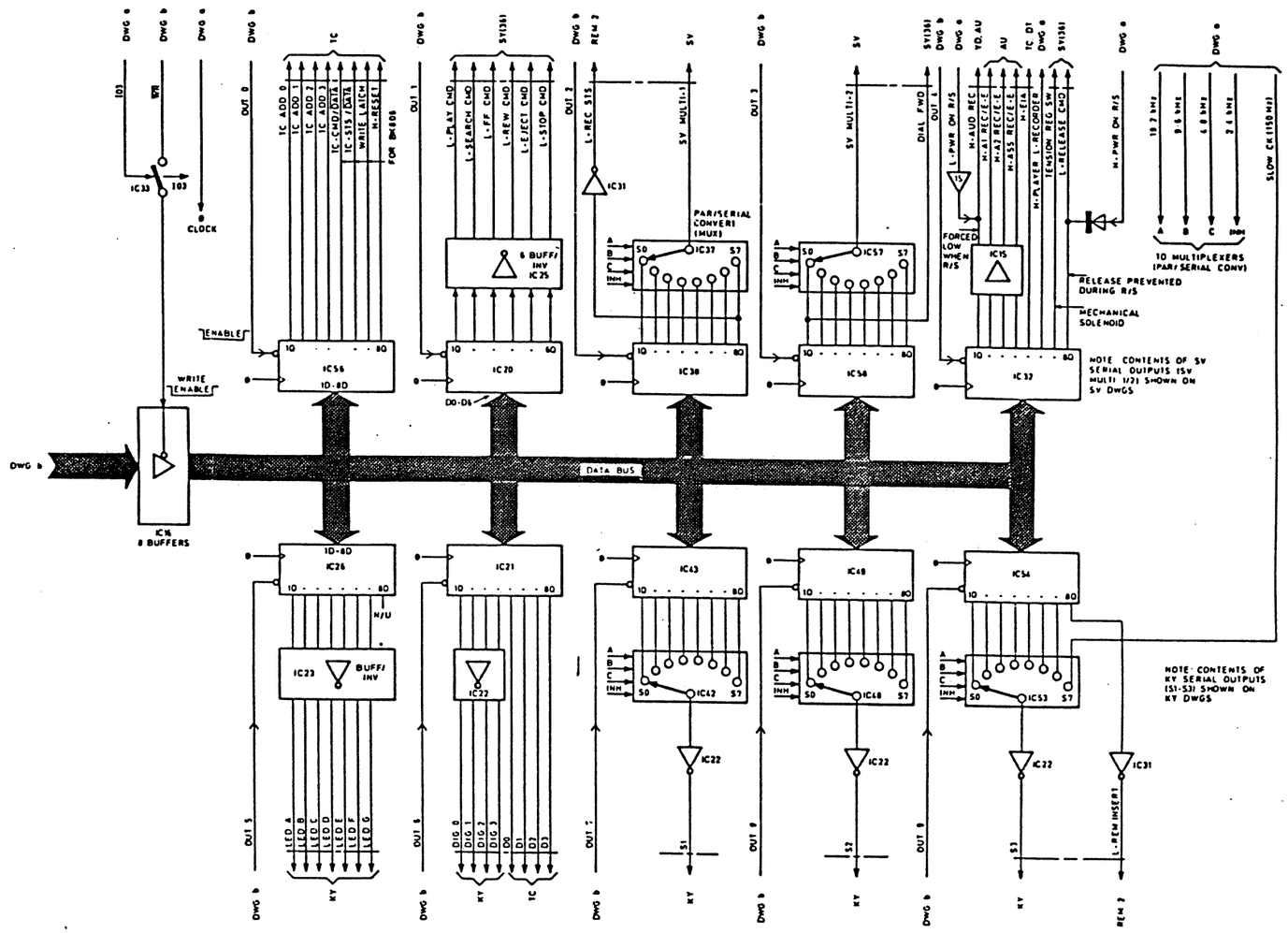

Fig. 3-14d Microprocessor Board SY-37 - Output Ports

SY-37 BOARD'S SELF DIAGNOSTIC FUNCTION

The SY-37 board mounts Z80 (CPU), and it is controlled by software. Therefore, unlike conventional wired logic, the signal waveform, in a CPU bus line, is difficult to check using an oscilloscope.

The SY-37 board is also provided with a self diagnostic function. This function helps to clarify the cause of troubles. It also clarifies whether the troubles are caused by the microcomputer itself.

Using the SY-37 board's self diagnostic function, the signal contents at each I/O port are displayed as "H" or "L" on the front panel LED. The cause of the troubles can be made clear by comparing the system controller operation and the signal information at each port with the displayed contents. The operator is not directly informed of all defective areas. Moreover, information necessary for field service performance is displayed as much as possible.

Operation

The self diagnostic function is described below.

S5 (8-bit DIP switch) is inserted on the SY-37 board to activate the self diagnostic function. The CPU enters the self diagnosis mode or the NORMAL mode according to the selected DIP switch position. The position and function of the DIP switch are shown below.

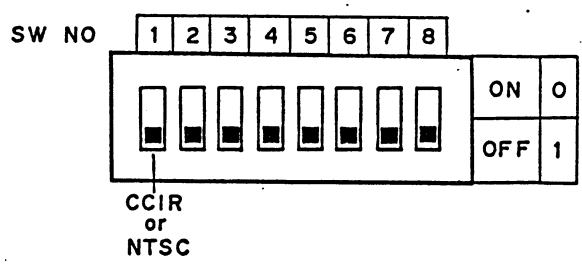

S1 ON: CCIR
OFF: NTSC
Selected according to the destination.

S2 ON: Self diagnosis
OFF: NORMAL
Selected according to the software used.

S3 ON: SYSTEM flag check
OFF: I/O check

S4 ON: IN port
OFF: OUT port

S5 through S8 indicate the I/O address value using a binary code.

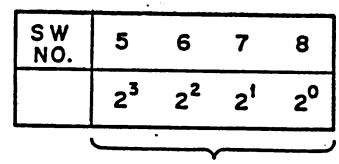

I/O address value setting switches

Several examples are given below.

Ex. 1

Press the PLAY key to check whether the signal input is displayed. While the PLAY key is pressed, the signal input is sent to bit D0 of IN port No. 32. The S5 setting is as shown below.

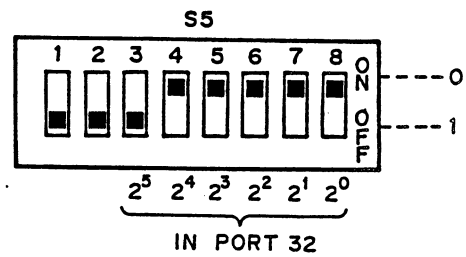

As a result, the following is displayed.

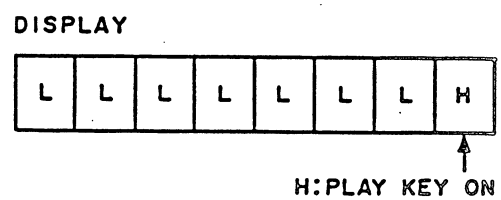

Next, when the PLAY key is pressed, a PLAY command is output from the CPU. Then, the PLAY command is output to bit D0 of OUT port No.49. The display is as shown below.

DISPLAY

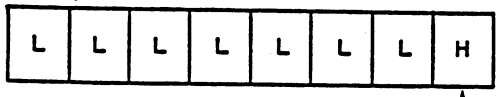

H:PLAY COMMAND

The contents of system control signals for the IN and OUT ports are shown in the table below.

Self Diagnosis

Flag Selection (How to set SY-37 to the TEST mode.)

(1) NOR (SW No. 1)

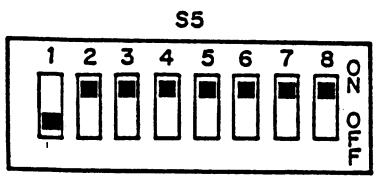

NTSC

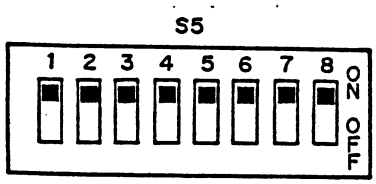

CCIR

(2) FLAG (SW No. 2)

ON : NORMAL mode
OFF : FLAG SELECT mode

(SW No. 3 - No. 8)

SET "FLAG # (Number)"

FLAG #
0 - 31: System flag check
32 - 47: IN port check
48 - 63: OUT port check

SW No. 3	ON	- System flag
	OFF	- I/O check
SW No. 4	ON	- IN port
	OFF	- OUT port

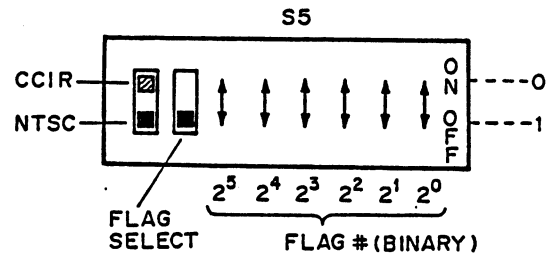

Ex. 1 When the PLAY key is pressed, FLAG 32 (BIN 0) appears on the display as shown below.

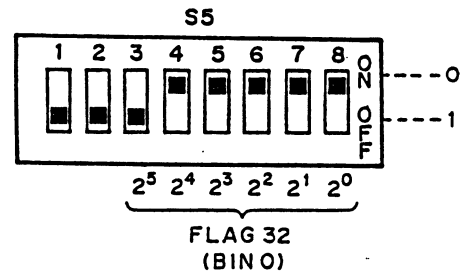

DISPLAY

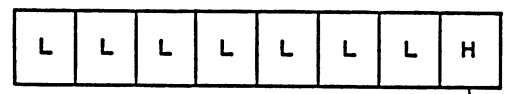

H:PLAY KEY ON

Ex. 2 When the PLAY command is output from the SY-37 board, FLAG 49 (BOUT 1) appears on the display as shown below.

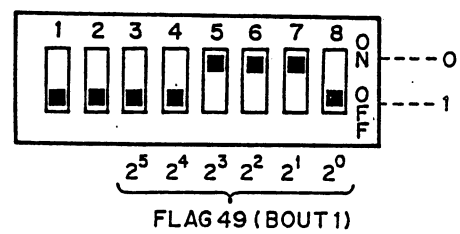

DISPLAY

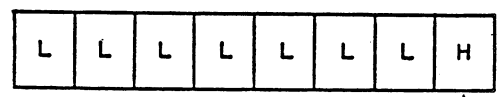

H:PLAY COMMAND

System Flag 1

Flag#/	D7	D6	D5	D4	D3	D2	D1	D0	
0	MECH TEN, REG OFF(BVU-820)					PREVIEW EDIT	END OF REVIEW		
1	IRIM-OUT DISABLE	IRIM-IN DISABLE	ENTRY-OUT DISABLE	ENTRY-IN DISABLE	TIMER RESET	PREROLL WAIT	AUTO MODE	DIAL ABORT	
2				REMOTE E-E	PB/EE SW E-E	STANDBY OFF E-E	LOADING OFF E-E	REC KEY E-E	-Full E-E Req. Flag
3	8 MIN. TIMER ON	PAUSE	STILL	STOP	1	REVIEW ENABLE		FUNCTION KEY ON	
4					PREVIEW AUTO E. BLINK	OUT BLINK	IN BLINK	EDIT MODE BLINK	
5	MASTER MODE		PLAYER REQ.	RECORDER REQ.			TX ENABLE	PLAYER CONTROL	-TX: Trans-mission
6									
7			CASSETTE UP (CASS OUT)					LOCAL (REM/LOC SW)	
8	STANDBY LAMP		STOP LAMP	EJECT LAMP	REW LAMP	FF LAMP	REC LAMP	PLAY LAMP	
9	SERVO LOCK		SHUTTLE	JOG	VAR	TAPE DIREC-TION	STILL	CUE-UP	
10	AUTO MODE						OUT	IN	Status for 9-pin Remote Controller
11	SELECTED E-E	FULL E-E		EDIT	REVIEW	AUTO EDIT	PREVIEW	PREROLL	
12		INSERT	ASSEMBLE	VIDEO			A2	A1	
13									
14									
15					COLOR FRAME LOCK			REC INHIBIT	

System Flag 2

Flag#/		D7	D6	D5	D4	D3	D2	D1	D0	
16										
17										
18										
19										
20										
21										
22										
23										
24										
25										
26										
27				PLAYER CASSETTE UP			PLAYER HARD ERROR		PLAYER LOCAL	Status of Player
28		PLAYER STANDBY		PLAYER STOP	PLAYER EJECT	PLAYER REW	PLAYER FF	PLAYER REC	PLAYER PLAY	
29		PLAYER SERVO LOCK		PLAYER SHUTTLE	PLAYER JOG	PLAYER VAR	PLAYER TAPE DIR.	PLAYER STILL	PLAYER CUE-UP	
30								PLAYER OUT	PLAYER IN	
31					PLAYER EDIT	PLAYER REVIEW	PLAYER AUTO EDIT	PLAYER PREVIEW	PLAYER PREROLL	

Input Port Buffer

Flag#		D7	D6	D5	D4	D3	D2	D1	D0	
32	BIN 0	EDIT KEY	REC KEY	STOP KEY	EJECT KEY	REW KEY	FF KEY	SEARCH KEY	PLAY KEY	From KY-9
33	BIN 1	REVIEW KEY	AUTO EDIT KEY	PREVIEW KEY	PREROLL KEY	AS-SEMBLE KEY	INS. A2 KEY	INS. A1 KEY	INS. V KEY	
34	BIN 2	- KEY	+ KEY			ENTRY KEY	LAP KEY	OUT KEY	IN KEY	
35	BIN 3			PLAYER KEY	RE-CORDER KEY		RESET KEY	PB. PB/EE SW	STANDBY KEY	
36	BIN 4	JOG DATA								
37	BIN 5	L: DIAL CMD	H: JOG L: SEARCH	H: FWD L: REV	SHUTTLE DATA 3	DATA 2	DATA 1	DATA 0		
38	BIN 6	L: STAND BY	L: SERVO LOCK	L: STOP	L: EJECT	L: REW	L: FF	L: SEARCH	L: PLAY	Status from SY-36, SW, etc. (SY-92)
39	BIN 7	L: REMOTE (36p)	L: EMER-GENCY	L: LOAD-ING END	L: REC OK	L: DT (VAR)	L: DT (SHUT-TLE)	L: DIAL ENABLE	P.ROL TIME H: 7sec. L: 5sec.	
40	BIN 8					L: REMOVE (9 PIN)			L: PAUSE	
41	BIN 9									
42	BIN 10	L: EDIT CMD	L: REC CMD	L: STOP CMD	L: EJECT CMD	L: REW CMD	L: FF CMD	L: CUTIN CMD	L: PLAY CMD	From RM4 (34P-Flat Cable)
43	BIN 11	NOR. FWD PB MACHINE	L: CUT OUT CMD	SPEED B CMD L L	SPEED A CMD L-1/30 H-1/5	L: REV CMD	L: INS A2	L: INS A1	L: INS V	
44	BIN 12			H H	H-1 L-5					
45	BIN 13									
46	BIN 14									
47	BIN 15									

Output Port Buffer

Flag#		D7	D6	D5	D4	D3	D2	D1	D0	
48	BOUT 0	RESET		PRESET	H:CONT. L:DATA	A3	A2	A1	A0	To TC13/20 (Not used)
49	BOUT 1			STOP CMD	EJECT CMD	REW CMD	FF CMD	SEARCH CMD	PLAY CMD	To SY-36
50	BOUT 2	REC ASSY	SKEW	ASS. REC	RE ENABLE	INS. V REC/EE	VIDEO REC/EE	INS. V REC	NOR. REC	To SV-24
51	BOUT 3	COLOR FRAMING	L:VIDEO SYNC (SV REF)	STILL CMD	NOR.FWD PB MACHINE (L: INT/ EXT SV REF)	DT ON	DRUM DELAY	CONFI	DIAL FWD	
52	BOUT 4									
53	BOUT 5									
54	BOUT 6									
55	BOUT 7	STANDBY	SERVO LOCK	STOP	EJECT	REW	FF	SEARCH	PLAY	To KY-9 (Lamp)
56	BOUT 8	REVIEW	AUTO E	PREVIEW	P.ROLL	ASSEM-BLE	INS.A2	INS.A1	INS.V	
57	BOUT 9	INSERT (To 36 PIN)	STILL	PLAYER	RECORDER	EDIT	REC	OUT	IN	
58	BOUT 10		AUTO.E, BLINK	PREVIEW BLINK		ASS BLINK	INS.A2 BLINK	INS.A1 BLINK	INS.V BLINK	
59	BOUT 11							OUT BLINK	IN BLINK	Local
60	BOUT 12							OUT BLINK	IN BLINK	9-Pin Remote
61	BOUT 13	STANDBY	SERVO LOCK	STOP	EJECT	REW	FF	SEARCH	PLAY	9-Pin Player Control (Lamp)
62	BOUT 14	REVIEW	AUTO E.	PREVIEW	P.ROLL	ASSEM-BLE	INS.A2	INS.A1	INS.V	
63	BOUT 15		STILL LAMP	PLAYER LAMP	RECORDER LAMP	EDIT LAMP	REC LAMP	OUT LAMP	IN LAMP	

SERIAL DATA TRANSMISSION COMPARISON OF RS-422 and RS-232C

1. Outline of Various EIA Standards

Parameter		RS232	RS423	RS422	Proposed Std 1360
Operation mode		Single end	Single end	Differential	Differential
Number of connectable devices		1 driver, 1 receiver	1 driver, 10 receivers	1 driver, 10 receivers	32 drivers, 32 receivers
Maximum cable length		50 feet	4000 feet	4000 feet	4000 feet
Maximum transmission rate		20K bits/sec	100K bits/sec	10M bits/sec	10M bits/sec
Maximum in-phase voltage		±25V	± 6 V	+ 6 V −0.25V	+12V − 7 V
Driver output voltage		+ 5 V min ±15V max	±3.6V min ±6.0V max	± 2 V.min	±1.5V min
Driver load		3 kΩ − 7 kΩ	450Ω min	100Ω	54Ω
Driver through rate		30V/μs max	Determined by the variable cable length and data transmission rate.	Not variable	Not variable
Driver output resistance	Power ON	N A	N A	N A	±100μs max − 7 V≤Vcm≤12V
	Power OFF	300Ω	±100μa max @ ± 6 V	+100μa max −0.25V≤Vcm≤6V	±100μs max − 7 V≤Vcm≤12V
Receiver input resistance		3 kΩ − 7 kΩ	> 4 kΩ	> 4 kΩ	>12kΩ
Receiver sensitivity		± 3 V	±200mV	±200mV − 7 V≤Vcm≤ 7 V	±200mV −12V≤Vcm≤12V

(Comparison of various EIA standards)

2. Relation between the Transmission Rate and the Transmission distance in the EIA Standards

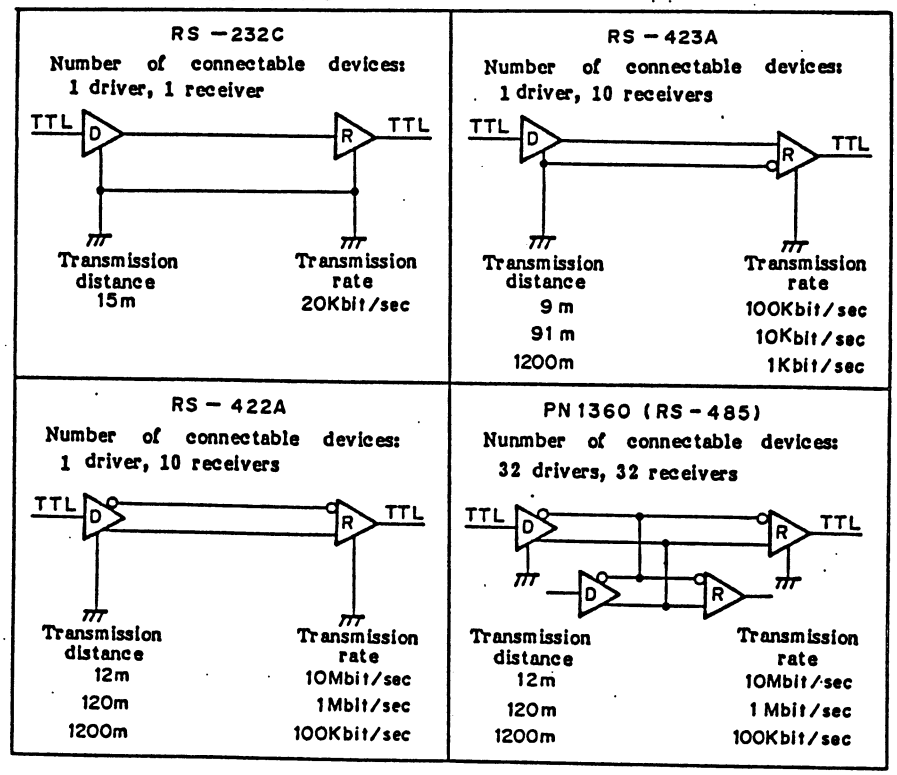

3. Data Transmission Systems

Data transmission circuits are fundamentally divided into two types: the unbalanced type and the balanced type. Each type has merits and demerits, so the suitable type should be selected.

3-1. Outline of the unbalanced data transmission circuit

As shown in Fig. 3-1, this circuit uses a single signal line and a ground line for returning. This method can be easily implemented. However, it is now assumed that noise is added at point P due to magnetic or capacitive induction. If such noise is added when the signal level is "H," the circuit will be damaged, although it depends on the input voltage range of the receiver. If the noise is added when the signal level is "L," the circuit will regard this noise as an "H" signal. To prevent these problems, the driver output voltage level is increased; the driver output current capability is improved so that the circuit has high enough driving capability even if the termination value is reduced; the threshold voltage of the receiver is increased, hysteresis exists so that the circuit does not respond to the impulse noise, or shielded transmission lines are used.

3-2. Outline of the balanced data transmission circuit

As shown in Fig. 3-2, the driver has a differential output, the receiver has a differential input, and the data is transmitted between the signal lines (A) and (B) as differential data. It is now assumed that noise is added at point P as in the unbalanced type. In this case, a pair of twisted wirings or the like are used as the signal lines (A) and (B), so that similar noises are added to both lines (A) and (B). When the noise is added as an in-phase signals, it is removed by the high in-phase component removing capability of the receiver, so that the output does not change. The signal components are output since they are input as differential signals. In addition, even when noise is added at point Q of the ground line, the result is the same as if the noise was added at point P of the signal lines. Therefore, the output does not change. As described above, the balanced type is superior to the unbalanced type for noise suppression.

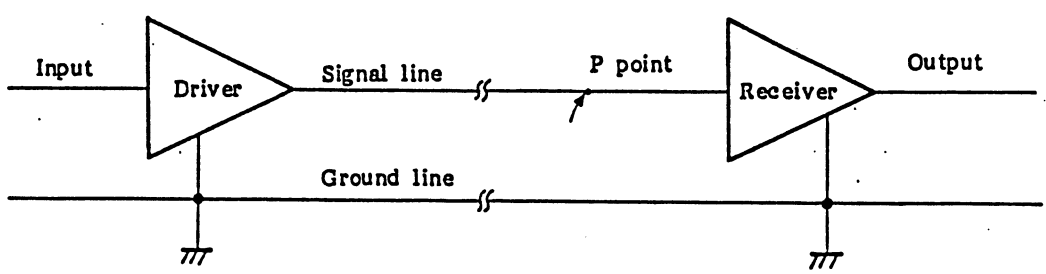

(Fig. 3-1 Conceptual Diagram of an Unbalanced Transmission Circuit)

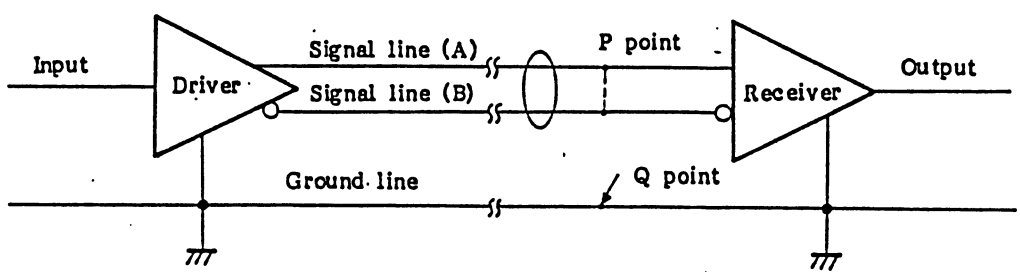

(Fig. 3-2 Conceptual Diagram of the Balanced Transmission Circuit)

1-6. EDITING

1-6-1. Preparation

Rear panel

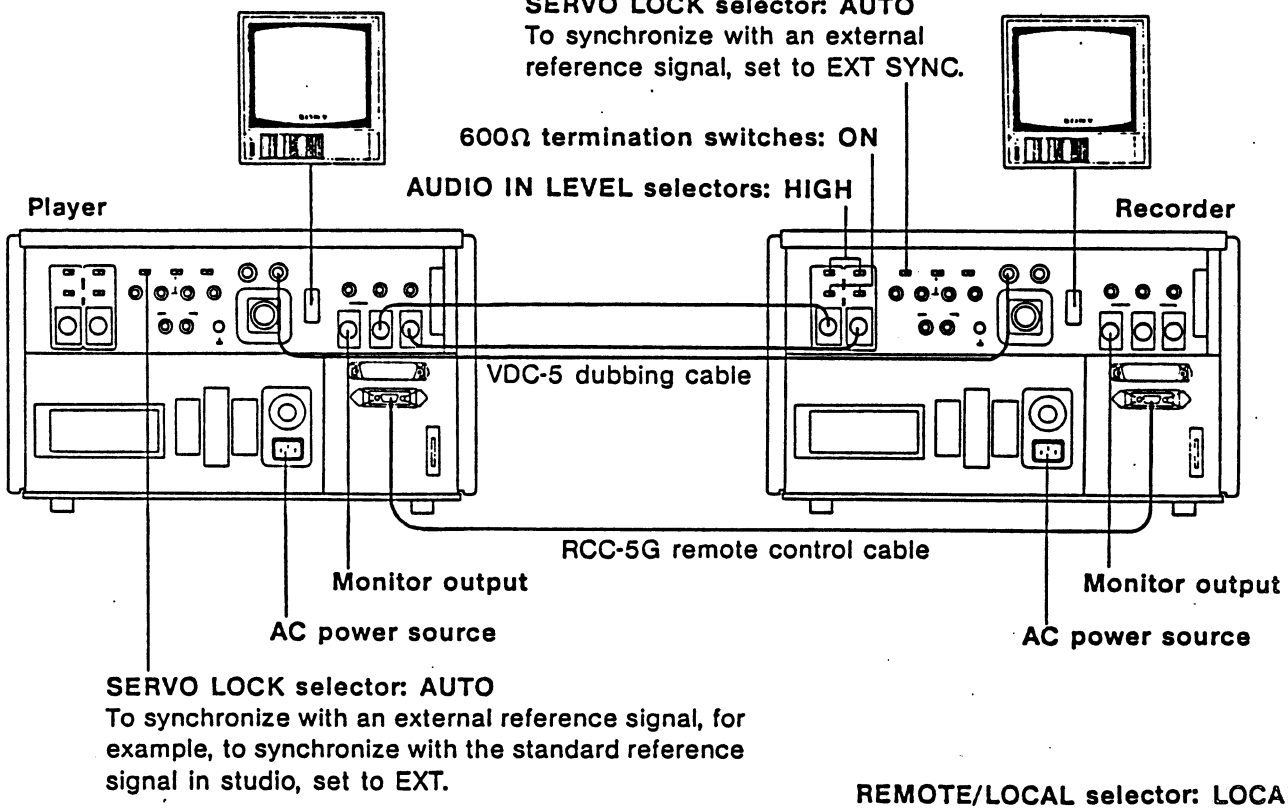

Front panel

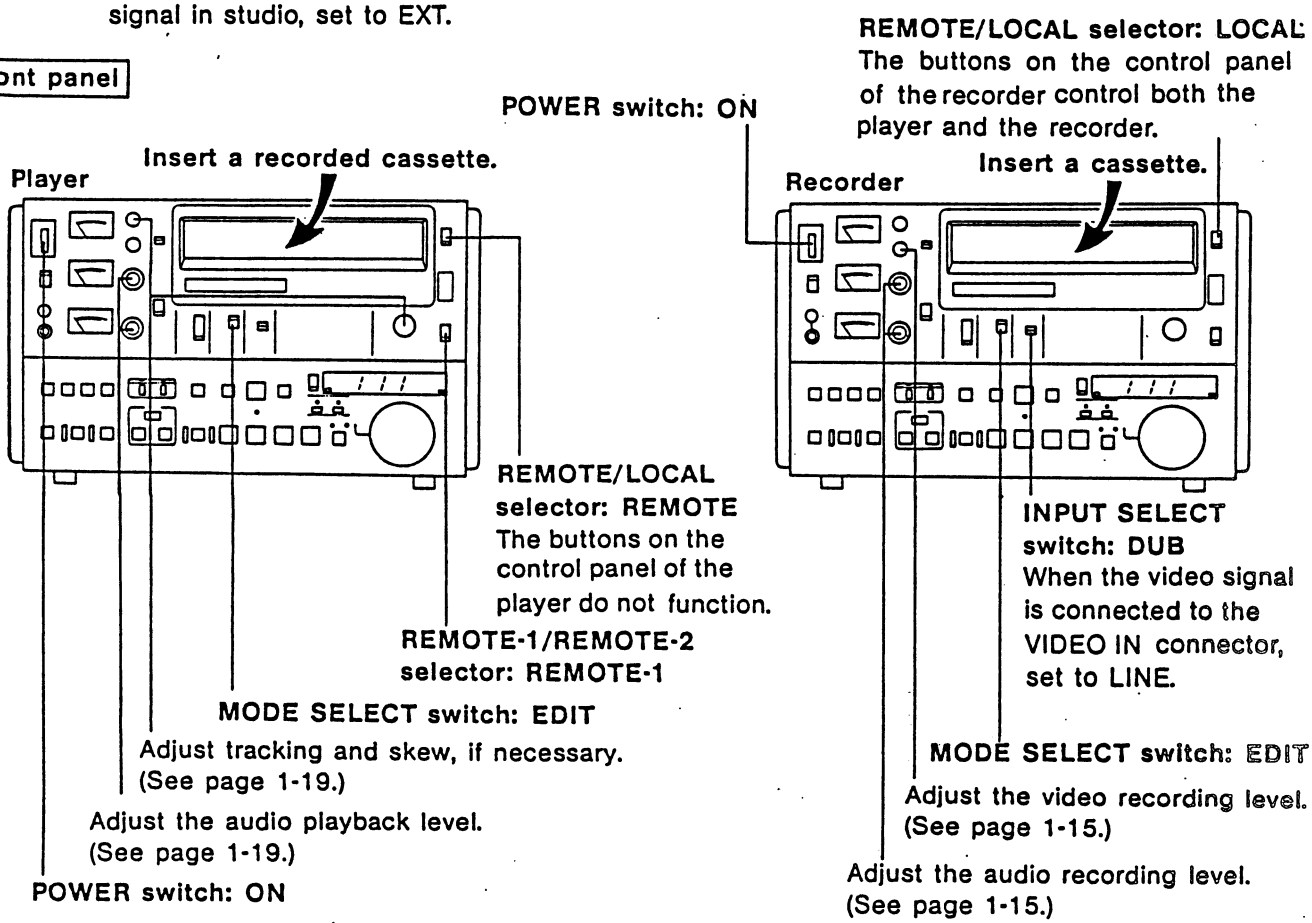

For the settings of the other switches, see page 1-18.

For the settings of the other switches, see page 1-14.

1-6-2. Operation

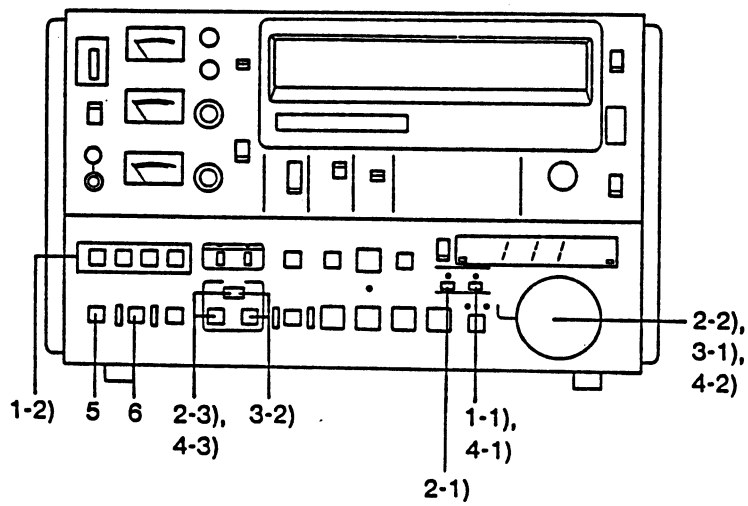

1. Select the editing mode.
   Assembly editing
   1) Press the RECORDER button. The RECORDER lamp will light.
   2) Press the ASSEMBLE button. The ASSEMBLE button will light.

   Insert editing
   1) Press the RECORDER button. The RECORDER lamp will light.
   2) Press any or all of the INSERT buttons whose signals you want to insert and the pressed button(s) will light.

To release the selected mode
Press the same button again.

2. Determine the IN point of the player.
   1) Press the PLAYER button.
      The PLAYER lamp will light, and the IN and OUT buttons will start blinking slowly.
   2) Search for the IN point with search dial.
   3) Press the ENTRY and IN buttons simultaneously.
      The IN button will light and the digits displayed on the time counter display will be entered as the IN point.

Note
The first IN point should be at least 10 seconds after the recording start point on the tape.

3. Determine the OUT point of the player.
   1) Search for the OUT point with the search dial.
   2) Press the ENTRY and OUT buttons simultaneously.
      The OUT button will light and the digits displayed on the time counter display will be entered as the edit-out point.

Note
The OUT point should be placed after the IN point. If the OUT point is placed before the IN point, the entered IN point is erased and the automatic editing will not be performed correctly.

4. Determine the IN point of the recorder.
   1) Press the RECORDER button.
      The RECORDER lamp will light, and the IN button starts blinking slowly.
   2) Search for the IN point with the search dial.
   3) Press the ENTRY and IN buttons simultaneously.
      The IN button will light and the digits displayed in the time counter display will be entered as the IN point.
      When the OUT point has been entered on the player, the entry of the OUT point on the recorder is not necessary.

5. Press the PREVIEW button if you want to rehearse the editing.
   The PREVIEW button will light, and the rehearsal of editing can be performed. Observe the recorder's monitor: the picture from the player will be displayed in the E-to-E mode between the IN and OUT points.
   If necessary, trim the edit points and press the PREVIEW button again.
   To stop the tape during previewing
   Press the STOP button. Press the PREROLL button to rewind the tape to the preroll point.
   To start auto editing during previewing
   Press the AUTO EDIT button.
   The tape will rewind to the preroll point and the edit recording will begin.

6. After deciding the edit points, press the AUTO EDIT button.
   The edit recording will be performed as shown below.

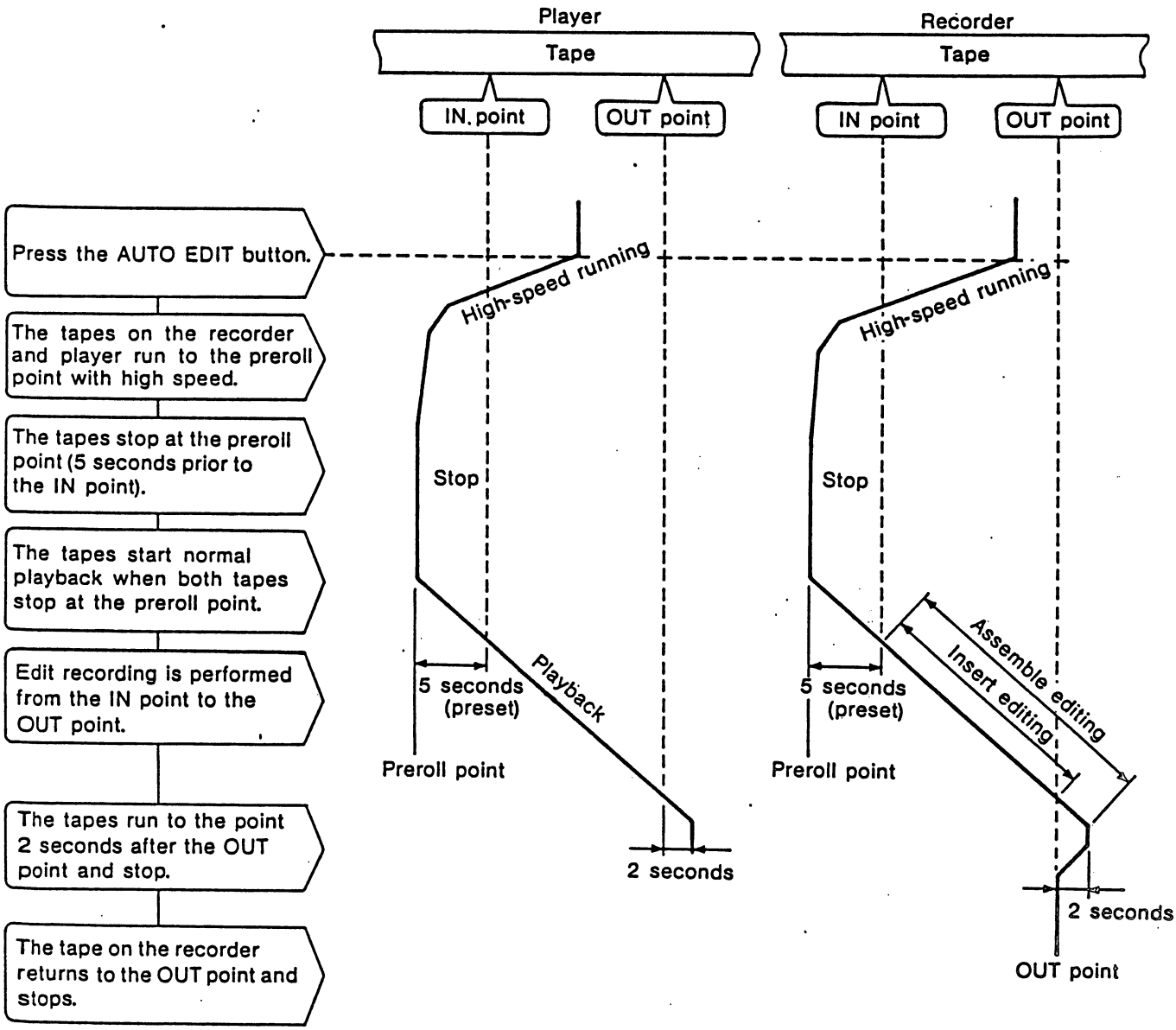

To review the editing result
After edit recording, press the REVIEW button to display the editing result on the recorder's monitor. The tape stops at the OUT point.
To stop the review, press the STOP button.

To monitor the edit recording
You can monitor the recording from 10 seconds prior to the IN point to 2 seconds after the OUT point on the recorder's monitor. In insert editing, if some CTL signals are missed on the tape on the recorder, the playback picture of the recorder will appear on the monitor indicating that the edit recording has not been made at that portion.

To stop edit recording
To stop edit recording before the OUT point, press the OUT and ENTRY buttons simultaneously.

When the edit recording is finished
When the edit recording of one scene is finished, search for and enter the IN and OUT points for the next scene, as described on the previous pages. You can make the OUT point of one scene as the next IN point for the recorder.

To search for and fix an edit point

Play back the inserted KSP tapes before setting the unit in the search mode. Otherwise, the SP/conventional mode circuit may not properly function.

Turn the search dial to the right or left to search for an editing point. When the RECORDER lamp lights, the point on the recorder will be searched for, and when the PLAYER lamp lights, the point on the player will be searched for. Decide the editing point by monitoring the picture on each monitor. If the SHUTTLE lamp is not lit, press the search dial in.

1. Set the VTR in the shuttle mode (the SHUTTLE lamp is lit), and search for the desired point by turning the search dial.
   When the dial is turned beyond the click position, 10 times the normal playback speed can be obtained. When the VTR enters the 10 times normal speed playback, the picture stops or may be temporarily distorted.

Note

After the power is turned on, be sure to set the dial to the center position.

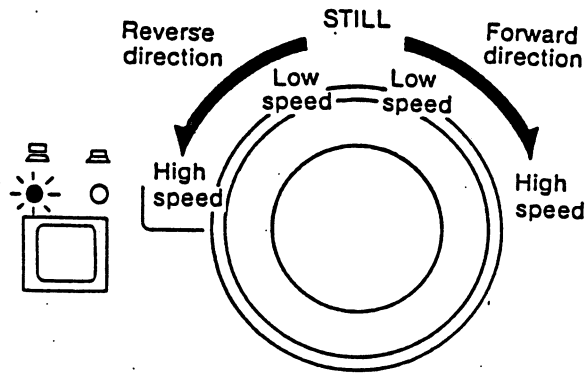

2. Press the dial in to set the VTR in the jog mode (the JOG lamp will light).
3. Turn the dial. The playback speed depends on the speed with which the dial is turned. Decide the editing point precisely.

How to use a search button

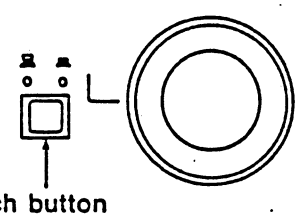

Simply turn the search dial to enter the search mode. Pressing the search button is not necessarily required. Turn the search dial under the following circumstances.

To start playback at a desired speed

1. Turn the search dial in the shuttle mode and set it at the desired playback speed.
2. Press the PLAY button.
3. Press the search button, and playback will begin at the speed set in step 1.

To prevent accidental entry into the search mode

The search dial can be set to be activated only when the search button is pressed to prevent the VTR from accidentally entering the search mode. (For details, refer to Section 2.)

To check the IN and OUT points

The entered IN and OUT points are displayed on the time counter display.

To check the IN and OUT points on the player

Press the PLAYER button, and then the IN or OUT button and hold it down.

The IN or OUT point will be displayed while the corresponding button is pressed.

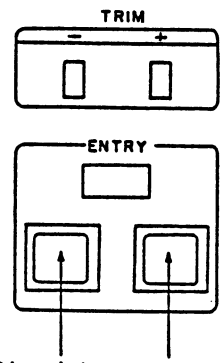

To check the IN and OUT points on the recorder

Press the RECORDER button. Then press the IN or OUT button and hold it down. The IN or OUT point will be displayed while the corresponding button is pressed.

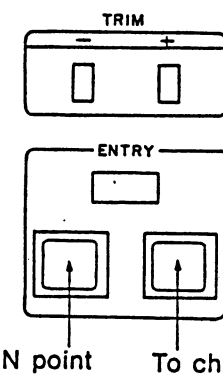

To trim the editing point

There are two methods to trim the entered editing point: trimming the point by one frame or entering a new editing point.

To trim frame by frame

The IN and OUT points can be trimmed by one frame.

1. Press the IN or OUT button to display the point to be trimmed on the time counter display.

2. While pressing the IN or OUT button, press the TRIM + or TRIM − button.
   Every time the TRIM + button is pressed, the editing point advances one frame and every time the TRIM − button is pressed, the editing point is pushed back one frame.

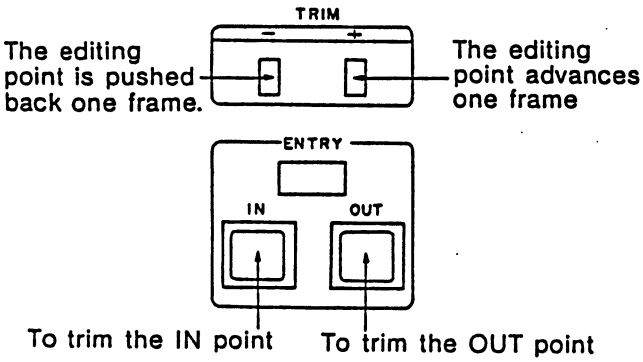

To enter a new editing point

Search for the new editing point and press the ENTRY button and the IN or OUT button simultaneously. The new point will be entered as the IN or OUT point and the previous point will be erased.

Time counter display

The time counter display shows the tape running time with the normal playback speed. When the RESET button is pressed, the display shows "0:00:00:00". When the tape runs in the reverse direction from "0:00:00:00", a minus sign "—" will be displayed to the left of the digits. The time counter counts the CTL signals recorded on the tape.

Therefore, if the tape lacks the CTL signals, the digits on the display will not indicate the correct time. If fast forward or rewind is repeated several times, correct indication of time is impossible. When a new tape is played back, the digits will not change because the CTL signals have not been recorded.

When the RECORDER lamp is lit, the tape position on the recorder is displayed. When the PLAYER lamp is lit, the tape position on the player is displayed.

When the IN or OUT button is pressed after entering the IN and OUT points, the IN or OUT point will be displayed.

When the RESET button is pressed after entering the editing point, the entered points will be erased. Never press the RESET button before edit recording is complete.

To display lap time

When the LAP button is pressed after entering the IN and OUT points, the lap time (duration between the IN and OUT points) will be displayed on the time counter display as long as the button is pressed. When the RECORDER lamp is lit, the lap time on the recorder is displayed. When the PLAYER lamp is lit, the lap time on the player is displayed. When the OUT point is entered on the player, the lap time will be transferred to the recorder after the preview or auto editing is performed.

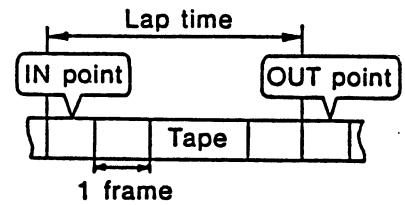

If the LAP button is pressed without entering the editing point, the following lap times will be displayed. When neither of the IN and OUT points have been entered, the lap time of the previous editing will be displayed. When only the IN point has been entered, the period from the IN point to the present tape position will be displayed. When only the OUT point has been entered the lap time of the previous editing will be displayed.

Blinking lamps

Press the following buttons whose lamps are blinking, and the editing can be completed. The blinking and lighting of lamps are as follows.

- The ASSEMBLE and INSERT (VIDEO, AUDIO CH-1, AUDIO CH-2) lamps blink to indicate that the editing mode must be determined by pressing the appropriate button.
  The pressed buttons stop blinking, but stay lit to indicate that the editing mode has been determined.
- The IN and/or OUT lamp(s) for the player and recoder blink to indicate that the editing point(s) must be entered.
  The IN and OUT lamps stop blinking, but stay lit when the IN and OUT points have been entered, and when editing has not yet been performed.
- The PREVIEW and AUTO EDIT lamps blink to indicate that you can proceed either to the preview or the auto edit operation.
  The PREVIEW or AUTO EDIT lamp stops blinking, but stays lit to indicate that the recorder is in one of these modes.

To change the preroll time

The preroll time is set to 10 seconds, but can be changed to 5 seconds.

When the preroll time is changed, the recording period of the CTL signals before the IN point or the period between the record-start point and the first IN point should be changed according to the new preroll time. The preroll time set on the recorder will be selected for both the player and recorder. For details, see Section 2. If the color framing mechanism is to be activated, the preroll time should be set to 10 seconds.

1-6-3. Parallel Operation of Player and Recorder

Search, entry, playback, fast forward, or rewind can be controlled by the player or recorder while the other is being used. This significantly reduces the time required for editings.

Method 1

Set the remote selector on the player to LOCAL so that the control panel on the recorder and player will contol each machine.

Method 2

Set the remote selector on the player to REMOTE (and to REMOTE 1), and use the control panel on the recorder as follows.

1. Press the RECORDER button. The RECORDER lamp will light. Operate the recorder with the buttons on the control panel.
2. Press the PLAYER button. The PLAYER lamp will light and the following buttons will control the player. The time counter display shows the tape portion on the player.
   Search dial, search button, PREROLL, PLAY, F FWD, REW, STOP, STANDBY, EJECT, ENTRY IN, ENTRY OUT, TRIM +, TRIM −, LAP, RESET.
   The recorder keeps the operation in step 1.
3. Press the RECORDER button to control the recorder again.

- If the control panel is detached and connected with an optional BK-802 remote control cable, the recorder and player will be remotely controlled.

1-6-4. Quick Editing

You can save time by entering the IN and OUT points in the preview mode.

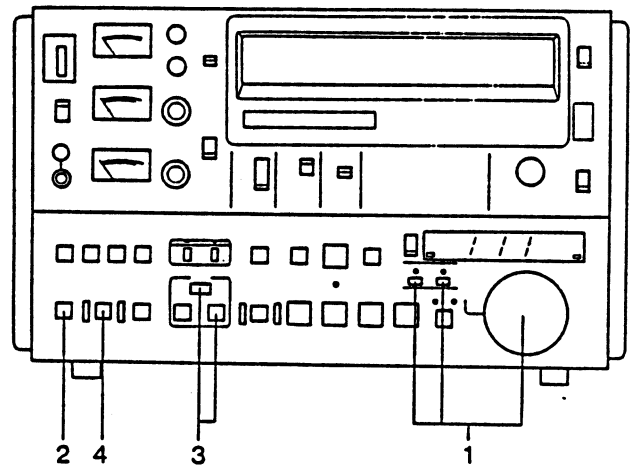

1. Locate the desired IN points for the player and recorder using the search dial, and stop the tape.
2. Press the PREVIEW button. The points obtained in step 1 will be memorized as the IN points for the player and recorder (the IN button will light), and the preview will start.
3. Watch the recorder's monitor and at the point where the scene is to end, press the OUT and ENTRY button simultaneously on the player or the recorder. This point will be memorized as the OUT point. The tape will run for 2 more seconds, as a post roll and will then return to the preroll points.

- You may also use the search dial to locate the OUT point accurately.
- If necessary, preview the tape again and trim the IN and/or OUT points.

4. Press the AUTO EDIT button to start the edit recording.

To edit even more quickly

Press the AUTO EDIT button in step 2 of the above procedure, and the edit recording will begin from the IN point decided in step 1.
Press the OUT and ENTRY buttons simultaneously on the player or the recorder at the point where the scene is to end, and that point will be the OUT point.

1-6-5. Continuous Editing (Butt Edit)

After recording from the IN point to the OUT point, the recorder returns to the OUT point and stops. The OUT point can be used as the next IN point for the recorder.
This technique is called "Butt edit".

1. Decide the next IN and OUT points on the player.
2. Press the AUTO EDIT button.
   Recording will be performed.

The entry of the OUT point in step 1 can be omitted. To omit the OUT point, press the OUT and ENTRY buttons simultaneously on the recorder or player to end the editing at the point where the scene is to end.

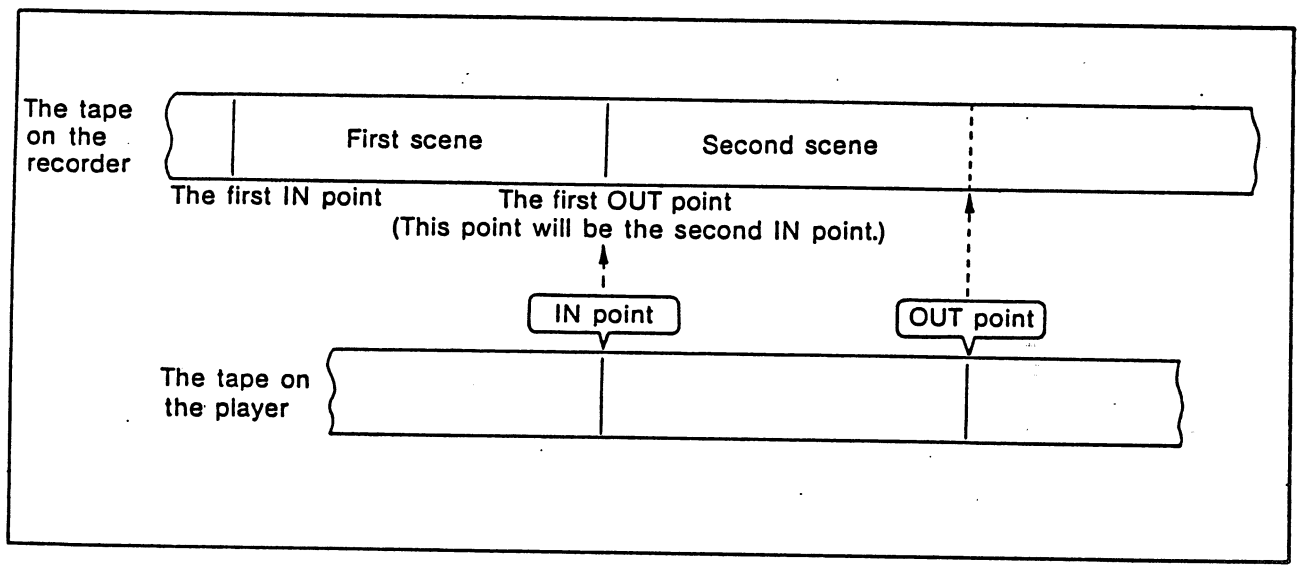

1-6-6. Split Edit

In the insert mode, edit recording of the video, audio channel 1, and audio channel 2 can be started and stopped independently.

1. Select the desired input signal with any or all of the INSERT buttons.
2. Press the AUTO EDIT button to start automatic edit recording.
3. At the point where the edit recording of the video or audio is to stop, press the appropriate INSERT button(s). The corresponding button(s) will turn off.
   At the point where the edit recording of the video or audio is to begin, press the appropriate INSERT button(s).
   The corresponding button(s) will light.
   You may cut in or cut out the desired signal(s) at any point by pressing the INSERT button(s).
   Even if all the signals are cut out, the desired signal(s) can be cut in simply by pressing the INSERT button(s).
4. When the OUT point has been entered, the recording will stop automatically.
   When the OUT point has not been entered, press the OUT and ENTRY buttons to stop edit recording.

Note
Once you stop edit recording, the video or audio signals cannot be cut in by simply pressing the INSERT buttons.
In the manual insert mode, you can split-edit in the same way.

To stop edit recording
Press the PLAY button.

Example of split edit

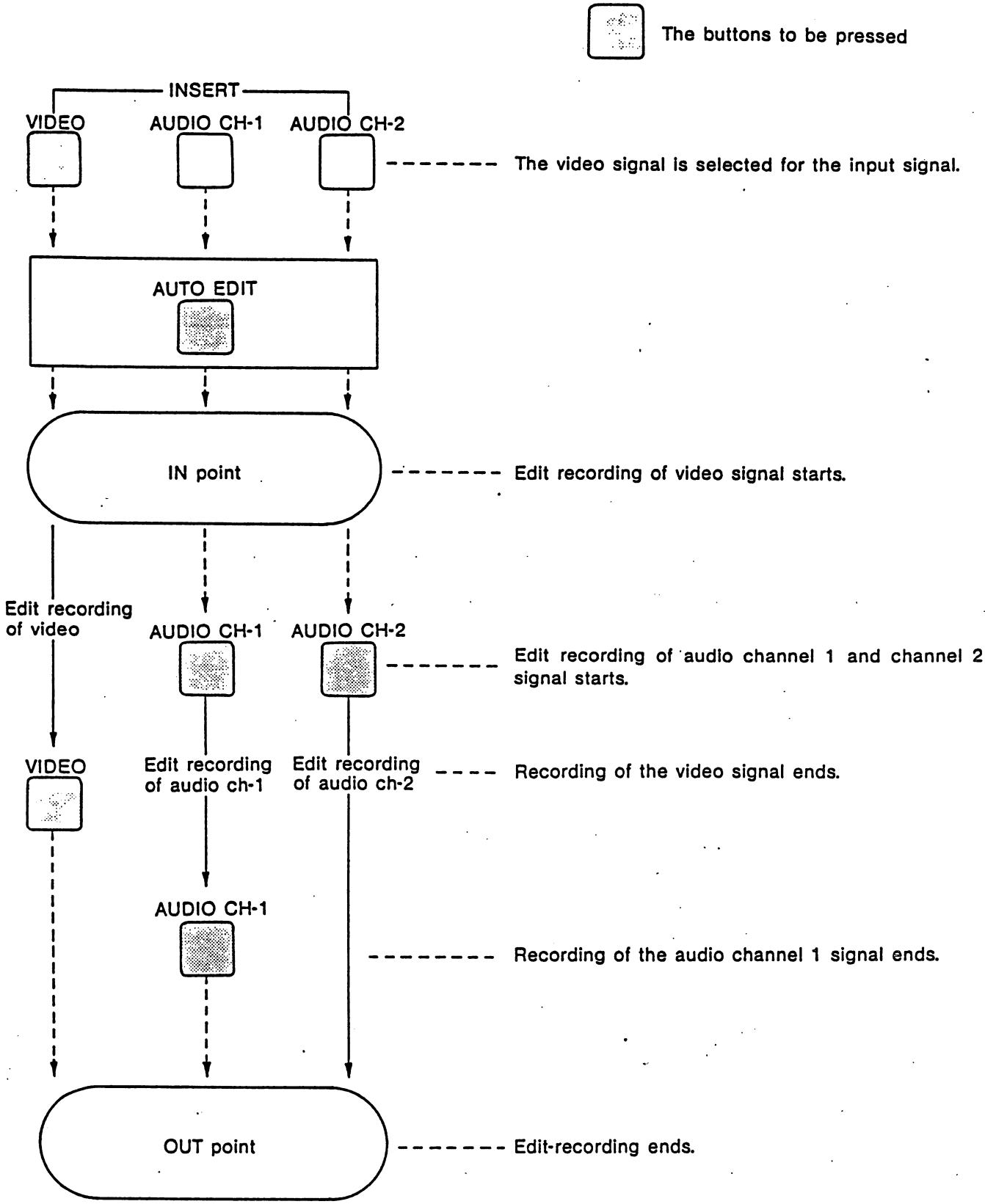

1-6-7. Editing the Camera Picture

To edit the camera picture during tape-to-tape editing

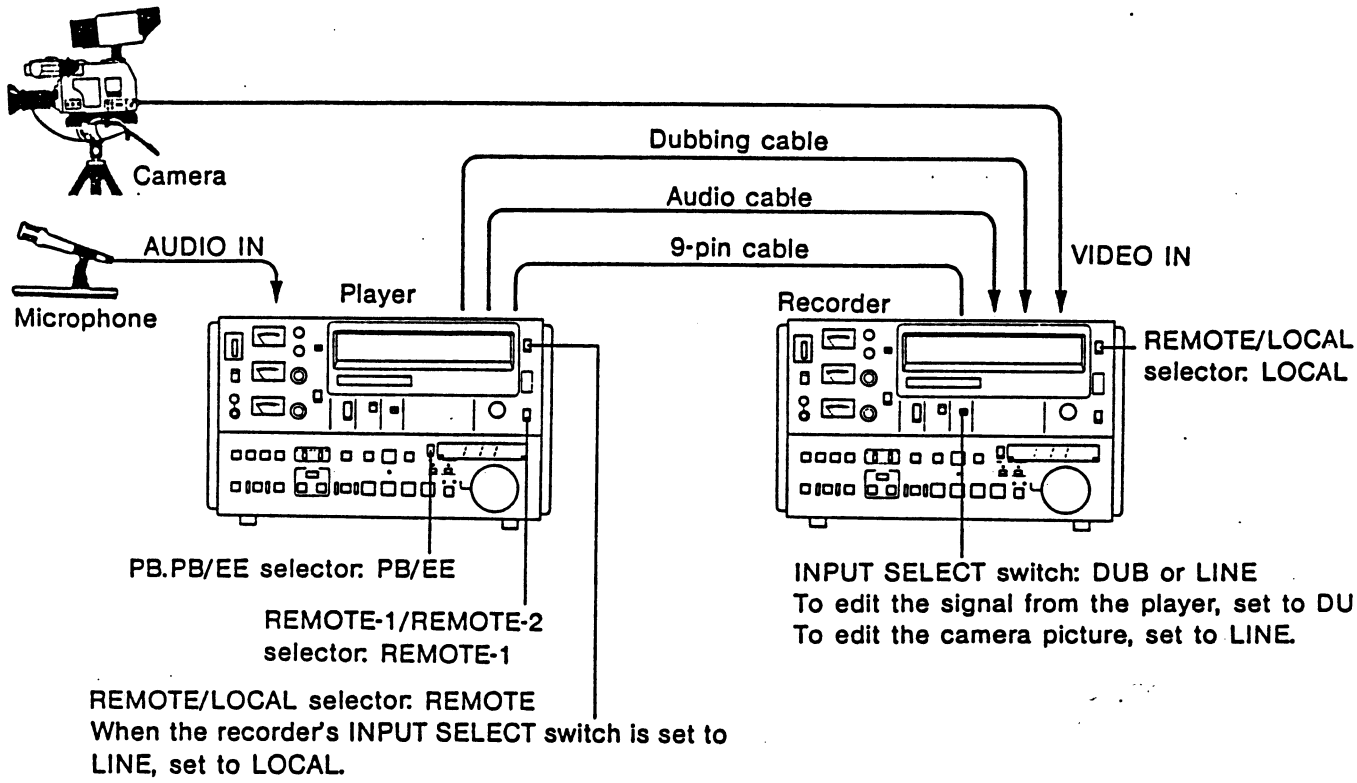

Note

To record the camera signals, set the player in the stop mode.

To edit camera picture only

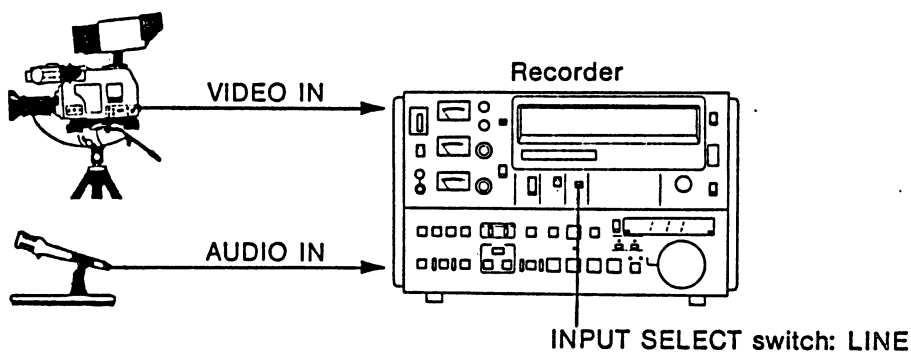

Assembly editing

Enter the IN point of the recorder and press the AUTO EDIT button. The recording of the camera signal will start.

To stop recording, press the ENTRY and OUT buttons simultaneously.

Note

The OUT point cannot be entered on the recorder for assembly editing.

Insert editing

Enter the IN and OUT points of the recorder and press the AUTO EDIT button. The interval between the IN and OUT points will be recorded.

When the OUT point has not been entered, press the ENTRY and OUT buttons simultaneously to stop recording.

1-6-8. Manual Editing

The connections and the settings of the switches are the same as those on page 1-20.

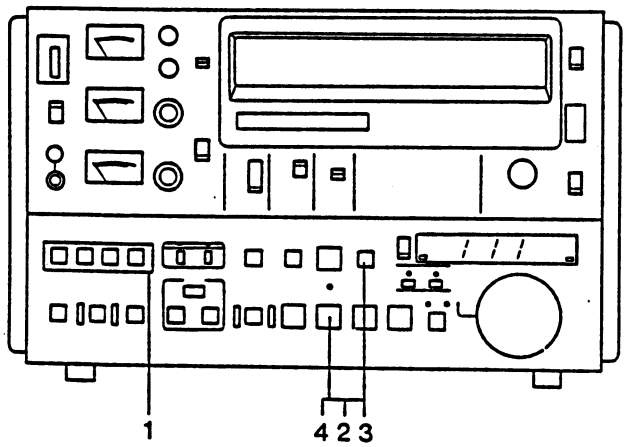

1. Select the editing mode: assembly or insert.
2. Play back the tapes of the recorder and player.
3. At the point where the scene is to begin, press the PLAY and EDIT buttons on the recorder simultaneously.
   Edit recording will begin at the point where the buttons have been pressed.
4. At the point where the scene is to end, press the PLAY button on the recorder.
   The edit recording will stop and the recorder will enter the playback mode.

Notes

- If editing is started from the stop mode or stopped by the STOP button, the picture will be unstable at the IN or OUT point.
- To obtain a perfectly stable playback picture, start the playback at least 10 seconds prior to the IN point.
- If the inserted KSP cassette is not played back before making an edit recording so that the SP/conventional mode circuit cannot detect the recorded format, the edit recording cannot be made with the proper recording format.

1-6-9. Editing with One BVU-850P

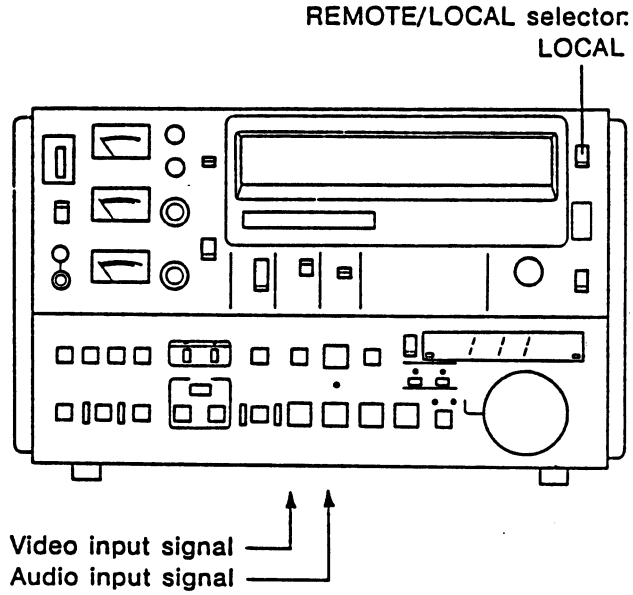

If a video and audio input signal is connected to this unit, editing can be made as described on the previous pages.

Note

The IN and OUT points can be entered and the AUTO EDIT, PREVIEW and TRIM buttons can be operated with this unit.
Operate the input video and audio signal source separately.

1-6-10. Editing with Conventional Editing Control Unit

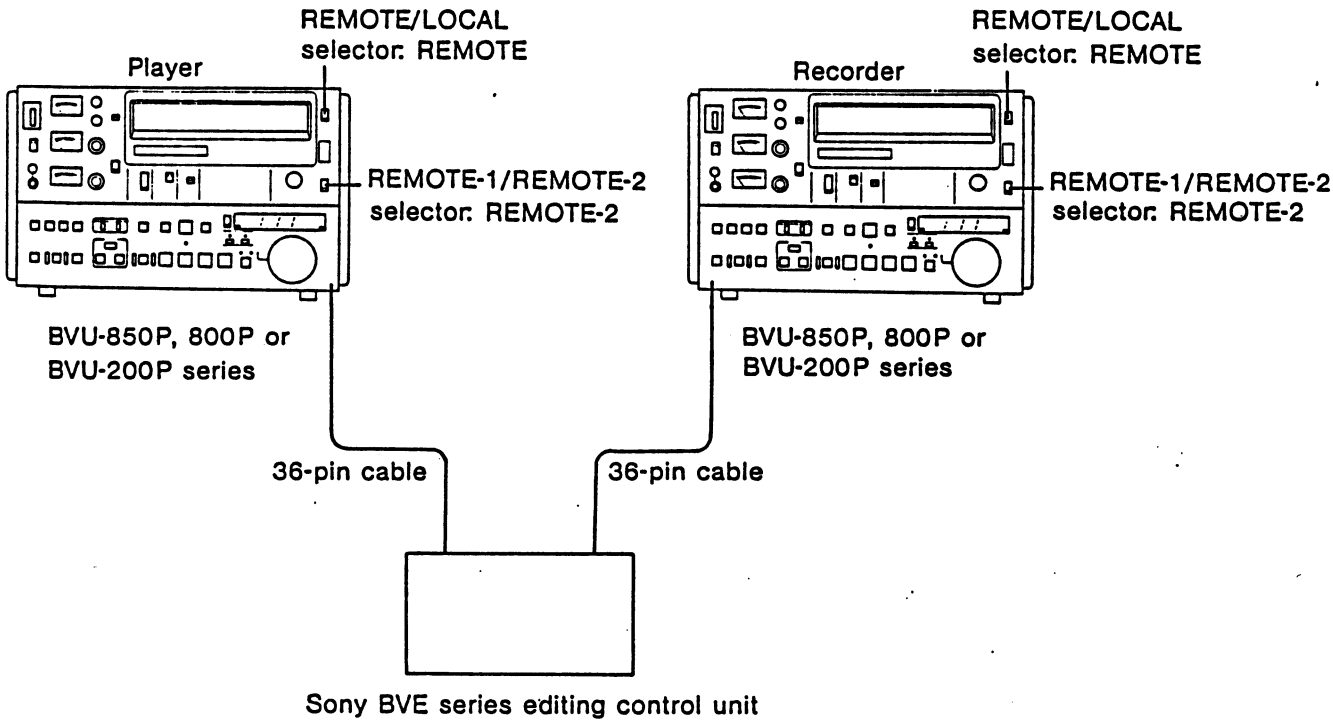

Use the function buttons on the control unit to remotely control the player and the recorder.

To take the inserted cassette out
Set the REMOTE/LOCAL selector to LOCAL and then press the EJECT button.

Notes on use of the BVE-500 series editing control unit

- When the BVE-500 series search dial is set to × 2, the tape of the BVU-850P runs at 5 times normal speed and when set to × 1/20, at 1/30 normal speed.
- When changing the mode of the BVU-850P from the search mode using a button on the BVE-500 series, be sure to keep the button pressed until the machine is set in your desired mode.
- When the buttons on the BVE-500 series are pressed, the appropriate lamps on the BVU-850P may not light. The lamps on the BVE-500 series indicate the correct operating mode of the player and recorder.
- When the BVE-500 series control unit is connected, the preroll time of the VTRs is set with the preroll time switch in the BVE-500 unit to 3 or 5 seconds.
- When the BVU-850P is used as a recorder with the BVE-500 series unit connected, set the COLOR FRAMING switch on the recorder to OFF.

1-7. PROTECTING TAPES

In order to prevent any damage to the tape, the unit automatically goes into the reset mode, when something wrong happens during operation.
For example:

Fast foward/rewind/forward/reverse/stop/still mode:
When irregular reel rotation or tape tension is detected, system control forces the unit to STOP or EJECT, then after 3 seconds, if irregular reel rotation or tape tension is still detected, the reel motor power will turn off and the mechanical brake is applied simultaneously.

During threading/unthreading:
When irregular reel rotation or tape tension is detected, system control forces the unit to STOP or EJECT.

Irregular voltage, sensor LED damage:
When irregular voltage at B + power line or sensor LED damage (no light) is detected, system control forces the unit to STOP or EJECT, and the mechanical brake is applied.

1-8. CLEANING HEADS

Clean the video heads and audio heads with an optional KC-1C video head cleaning cassette. For details, refer to the instructions attached to the cleaning cassette.

Note
As the head drum rotates even in the stop mode, be sure to eject the cleaning cassette after use.

BVU-800/820 SERIES

PROTOCOL OF REMOTE-1 (9 Pin) CONNECTOR

The REMOTE-1 (9-pin) connector for remote control operation is provided on the connector panel of BVU-800/820 series and Betacam series VTRs. The serial signal transmitted using the 9-pin connector is described here.

1. COMMUNICATION SIGNAL

- Full duplex (4-wire) communcation channel
- Asynchronous/synchronous bit serial/word serial digital signal
- Transmission rate: 38.4K bits/second (Kb/s)
- Each bit is configured as follows.
  1 START bit + 8 DATA bits + 1 PARITY bit + 1 STOP bit

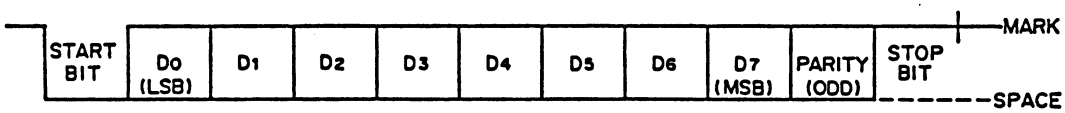

Odd parity: Indicates that the sum of the parity bit and data bits D0 through D7 is odd.

2. COMMAND BLOCK FORMAT

Commincation between the controller and device is received or sent in the form and sequence specified by CDM 1/DATA COUNT, CMD 2, and CHECKSUM. When the DATA COUNT is not zero, data containing the number of bytes corresponding to the value is inserted between the CMD 2 and CHECKSUM. This is shown below.

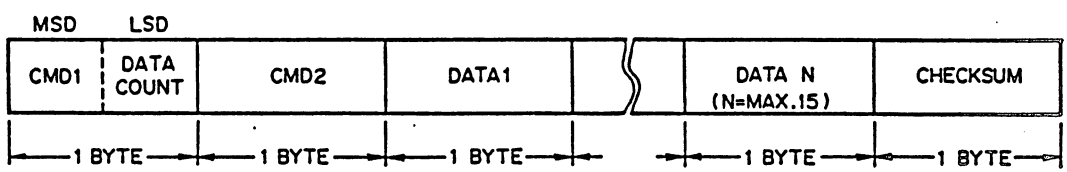

CMD 1: Indicates the command transmission direction and characteristic through its command classification. (Refer to the next table.)

CDM 1 Contents

CMD 1	FUNCTION	DIRECTION CONTROLLER DEVICE
0	SYSTEM CONTROL	⟶
1	SYSTEM CONTROL RETURN	⟵
2	TRANSPORT CONTROL	⟶
4	PRESET&SELECT CONTROL	⟶
6	SENSE REQUEST	⟶
7	SENSE RETURN	⟵

DATA COUNT: Indicates the number of data bytes when data is added to the command. (0 to FH)

CMD 2: Specifies each command.

DATA: Each command defines the number of bytes and their contents when data is added to the command.

CHECKSUM: Indicates the value of the low-order 8 bits obtained when addition is performed between the first bit of the command and the bit just preceding the CHECKSUM. Also, checks communication errors.

The relationship between the controller and device is shown below.

- When two BVU-800/820 series and Betcam series VTRs are connected through the REMOTE-1 (9-pin) connector, the recorder VTR is called a controller and the player VTR a device.
- When a commander other than the BVU-800/820 series and Betacam series VTRs is connected to one or more BVU-800/820 series and Betacam series VTRs, the commander is called a controller and the VTRs a device.

3. CONNECTIONS

Connector: 9-pin D-subminiature female (D-9S)

Each signal transmitted using a 9-pin connector of the controller and device is shown in the table below.

The controller and device are automatically selected.

4. COMMUNICATIONS PROTOCOL

1) For commincation between the controller and device, the controller takes priority. When the device must send an ACK, NAK, or DATA signal in response to the command from the controller, it sends back a CMD + DATA. When the device receives an error or undefined command, it sends back data which indicates the NAK CMD and error statuses.

Signal / Pin	CONTROLLER	DEVICE
1	Frame Ground	Frame Ground
2	Receive A	Transmit A
3	Transmit B	Receive B
4	Transmit Common	Receive Common
5	Spare	Spare
6	Receive Common	Transmit Common
7	Receive B	Transmit B
8	Transmit A	Receive A
9	Frame Ground	Frame Ground

A and B are defined as follows.

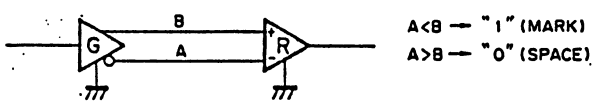

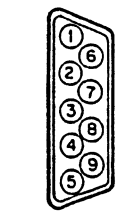

(EXTERNAL VIEW)

2) When the controller sents a command to the device (BVU-800/820 series and Betacam series VTRs), it should not output the next comand prior to receiving the response from the device.

3) The controller should not have a byte transmission interval of more than 10msec in one command block. When the device (BVU-800/820 series and Betacam series VTRs) detects that the controller has a byte transmission interval exceeding 10msec in the command, it invalidates the received command as a TIME OUT operation and sends an NAK (TIME OUT) signal.

4) The device should start to send the response command within 9msec after it receives the command block from the controller (BVU-800/820 series and Betacam series VTRs). Therefore, when the the device sends no response command 10msec or more after command block transmission is completed, the controller should take necessary measures due to incorrect communication between the controller and device.

5) When an error is detected in communication from the controller, the device (BVU-800 series and Betacam series VTRs) sends back an NAK signal. (For details of the response error, refer to the command list.) When the controller receives the above NAK signal, it should immediately stop sending the current command. For 10msec after that, the device receives no command (not including an NAK undefined command).

5. COMMAND LIST

When BVU-800/820 series and Betacam series VTRs are used for both the controller and device, they send commands shown in attached table (A) to respond to the controller and device. When a controller other than the BVU-800/820 series and Betacam series VTRs is used, VTRs receive commands shown in attached tables (A) and (B).

Table A

COMMAND FROM CONTROLLER				RETURN FROM DEVICE			
NAME	CMD 1	CMD 2	DATA	NAME	CMD 1	CMD 2	DATA
LOCAL DISABLE (＊＊1)	00	0C	——	ACK	10	01	——
DEVICE TYPE REQUEST (＊＊2)	00	11	——	DEVICE TYPE	12	11	1000: 30 FRAME 1100: 25 FRAME
LOCAL ENABLE (＊＊3)	00	1D	——	ACK	10	01	——
STOP	20	00	——	ACK	10	01	——
PLAY	20	01	——	ACK	10	01	——
STANDBY OFF	20	04	——	ACK	10	01	——
STANDBY ON	20	05	——	ACK	10	01	——
EJECT	20	0F	——	ACK	10	01	——
FF	20	10	——	ACK	10	01	——
JOG FWD	21	11	(＊1)	ACK (＊3)	10	01	——
SHTL FWD	21	13	(＊2)	ACK (＊3)	10	01	——
REW	20	20	——	ACK	10	01	——
JOG REV	21	21	(＊1)	ACK (＊3)	10	01	——
SHTL REV	21	23	(＊2)	ACK (＊3)	10	01	——
PREROLL	20	30	——	ACK	10	01	——
ANTI-CLOG TIMER DISABLE (＊＊4)	20	54	——	ACK	10	01	——
ANTI-CLOG TIMER ENABLE	20	55	——	ACK	10	01	——
EDIT OFF (＊＊5)	20	64	——	ACK	10	01	——
CUE UP WITH DATA (＊＊6)	24	31	(＊4)	ACK	10	01	——
TIMER 1 PRESET	40	08	——	ACK	10	01	——
IN ENTRY	40	10	——	ACK	10	01	——
OUT ENTRY	40	11	——	ACK	10	01	——
IN + SHIFT (＊＊7)	40	18	——	ACK	10	01	——
IN − SHIFT	40	19	——	ACK	10	01	——
OUT + SHIFT	40	1A	——	ACK	10	01	——
OUT − SHIFT	40	1B	——	ACK	10	01	——
IN FLAG RESET (＊＊8)	40	20	——	ACK	10	01	——
OUT FLAG RESET	40	21	——	ACK	10	01	——
EDIT PRESET	41	30	00 (for device clearing)	ACK (＊5)	10	01	——
PREROLL TIME PRESET	44	31	(＊4)	ACK	10	01	——
HEAD SELECT (＊＊9)	41	34	00 (R/P HEAD) FF (selected by VTR operation SW)	NAK (UNDEFINED)	11	12	01
AUTO MODE ON	40	41	——	ACK	10	01	——
CURRENT TIME SENSE	61	0C	01: TC 04: TIMER 1	TIMER 1 DATA	74	00	(＊4)
				SMPTE TC DATA	74	04	(＊4)
				SMPTE INTERPOLATED TC DATA	74	14	(＊4)
IN DATA SENSE	60	10	——	IN DATA	74	10	(＊4)
OUT DATA SENSE	60	11	——	OUT DATA	74	11	(＊4)
STATUS SENSE	61	20	(＊6)	STATUS DATA	7X	20	1 ~ 8 (＊7)
PREROLL TIME SENSE	60	31	——	PREROLL TIME DATA	74	31	——
TIMER MODE SENSE	60	36	——	TIMER MODE STATUS	71	36	00: TC 01: TIMER 1

Table B

COMMAND FROM CONTROLLER				RETURN FROM DEVICE			
NAME	CMD 1	CMD 2	DATA	NAME	CMD 1	CMD 2	DATA
REC	20	02	——	ACK	10	01	——
VAR FWD	21	12	0 ~ 7F	ACK (*3)	10	01	——
VAR REV	21	22	0 ~ 7F	ACK (*3)	10	01	——
FULL EE OFF (**10)	20	60	——	ACK	10	01	——
FULL EE ON	20	61	——	ACK	10	01	——
SELECT EE ON	20	63	——	ACK	10	01	——
EDIT ON	20	65	——	ACK	10	01	——
TIMER 1 PRESET (**11)	44	00	——	ACK	10	01	——
TIME CODE PRESET	44	04	(*4)	ACK	10	01	——
USERS BIT PRESET	44	05	(*8)	ACK	10	01	——
T.C.G. HOLD (**12)	40	0E	——	ACK	10	01	——
T.C.G. RUN	40	0F	——	ACK	10	01	——
IN DATA PRESET	44	14	(*4)	ACK	10	01	——
OUT DATA PRESET	44	15	(*4)	ACK	10	01	——
IN RECALL (**13)	40	24	——	ACK	10	01	——
OUT RECALL	40	25	——	ACK	10	01	——
COLOR FRAME SELECT (**14)	41	35	FF(selected by VTR operation SW)	ACK	10	01	——
TIMER MODE SELECT	41	36	00: TC 01: TIMER 1	ACK	10	01	——
INPUT CHECK (**15)	41	37	00: OFF 01: ON	ACK	10	01	——
VID REF DISABLE OFF	40	48	——	ACK	10	01	——
VID REF DISABLE ON (**16)	40	49	——	ACK	10	01	——
GEN DATA SENSE (**17)	61	0A	——	TC DATA	74	08	——
				UB DATA	74	09	——
				TC & UB DATA	78	08	——
CURRENT TIME SENSE	61	0C	(*9)	SMPTE UB DATA	74	05	(*8)
				TC & UB DATA	78	04	——
				TC & UB DATA	78	14	——
				NAK	11	12	(*10)
EDIT PRESET SENSE	60	30	——	EDIT PRESET STATUS	71	30	——

Note 1

* 1.

DATA	0	16	1C	22	28	2E	34	3A	40
SPEED	0	×1 /20	×3 /40	×0.12	×0.18	×0.28	×0.43	×0.67	×1

* 2.

DATA	0	10	20	2A	36	40	4A	57
SPEED	0	×1 /30	×1 /10	×1 /5	×1 /2	×1	×2	×5

* 3. Data 0 through 7F are received. Data exceeding 6.5 times normal speed (5 AH) is sent at 10 times normal speed, and data under 1/30 times normal speed is in the STILL mode.

*4. The beginning of data is located at the position designated by data 1 through 4.

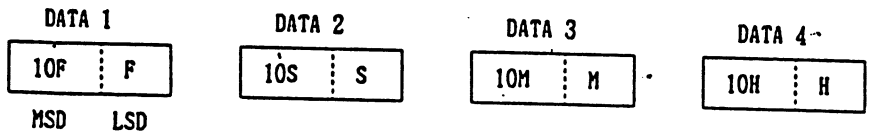

*5. The device receives the following data.

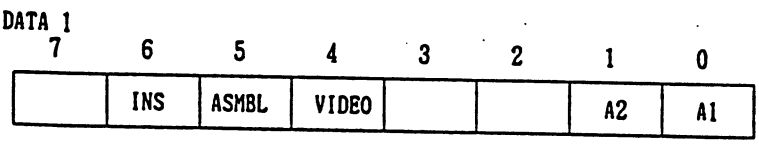

*6. STATUS data is requested.

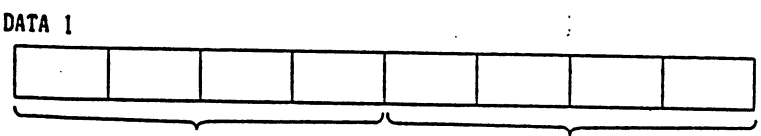

*7. The device status is indicated using data 0 through 8. The number of bytes to be transmitted from data is determined by STATUS SENSE data 1.

BIT / DATA	7	6	5	4	3	2	1	0
0			TAPE UNTHREAD (CASSETTE UP)					LOCAL
1	STANDBY		STOP	EJECT	REW	FF	REC	PLAY
2	SERVO LOCK		SHTL	JOG	VAR	TAPE DIRECTION 0=FWD	STILL	CUE UP
3							OUT	IN
4	SEL EE ON	FULL EE ON		EDIT	REVIEW (†)	AUTO EDIT (†)	PREVIEW (†)	PREROLL
5		INS	ASMBL	VIDEO		TC	A2	A1
6								
7								
8					COLOR FRAME LOCK			REC INHIBIT

(+) Used only for the BVU-800/820 series VTR.

*8. The value designated by data 1 through 4 is preset to the users' bit of a time code generator.

DATA 1		DATA 2		DATA 3		DATA 4	
UB2	UB1	UB4	UB3	UB6	UB5	UB8	UB7

*9. Sending of time data to the device is requested.

DATA 1

(MSB) 7	6	5	4	3	2	1	0 (LSB)
			SMPTE UB		TIMER 1		SMPTE TC
			MSD				LSD

The LSD and MSD exist independently, and each priority is taken sequentially from respective low-order bits. Also, when high-priority data exists with one or more "1" bits, the data is sent; when it doesn't exist, the next-priority data is sent.

*10. The next corresponding data is sent according to the data to be received.

DATA 1

(MSB) 7	6	5	4	3	2	1	0 (LSB)
TIME OUT	FRAMING ERROR	OVERRUN ERROR	PARITY ERROR		CHECKSUM ERROR		UNDEFINED COMMAND

Note 2

**1. The command is used only for BVW-40. BVW-10 and BVU-800/820 series VTRs do not receive this command. When the VTR's REMOTE select switch is set to REMOTE, the device's LOCAL function cannot be activated. For BVW-10 and BVU-800/820 series VTRs, the return command from the device is NAK.

**2. The command requests sending of the device type data.

**3. The command is used only for BVW-40. BVW-10 and BVU-800/820 series VTRs receive this command. When the VTR's REMOTE select switch is set to REMOTE, the device's LOCAL function can be activated. For BVW-10 and BVU-800/820 series VTRs, the return command from the device is NAK.

**4. This command stops operation of the tape protection mode (STOP to STANDBY or STILL to 1/30 times normal speed in the forward direction).

**5. When this command is sent in the manual EDIT REC mode, the unit enters the EDIT OFF mode (EDIT PLAY mode). This also sets the SELECT EE mode to off.

**6. Whe beginning of data is located at the position designated by data 1 through 4 using this command.

**7. The IN ENTRY value is incremented by one frame using the command.

**8. The command turns off the lamp at the IN point.

**9. The command selects the head used only for BVU-820.
For 00, the REC/PLAY head is used. For FF, the head is selected according to the VTR's DT select switch.

**10. The command inhibits outputting of all the input signals to the VTR as an EE signal.

*11. The command is used only for BVW-40, and it presets data to the CTL counter.

**12. The command holds the time code generator.

**13. The command turns on data at the IN point again.

**14. The command is used only for BVU-800/820 series VTRs. At this time, the servo color frame lock mode is selected.

**15. The command checks the input signal.

**16. The reference signal in the servo system is selected as an external or internal signal according to the presence of the external signal (the reference signal cannot be selected as the input video signal).

**17. The command is used only for BVW-40.

SECTION 8

SWITCHING REGULATOR

SECTION 8
SWITCHING REGULATOR

CIRCUIT DESCRIPTION

The PW-79 operation will be described below with reference to the block diagram in Fig. 1 and a circuit diagram.

1. Filter circuit (I)

A low-pass filter consists of an in-phase coil (L1), a filter coil (L2), and a capacitor and reduces noise in the common normal modes.

2. REG switching circuit (Regulator circuit)

Receives pulse width modulated (PWM) signal from a REG drive circuit and switches over power transistors Q1 and Q2 of the regulator.

3. REG drive circuit (Regulator drive circuit)

Receives a signal of the PWM circuit at the base of driver transistor Q5, amplifies and wave-shapes the signal by Q5, Q4, and Q3; then sends it to the REG switching circuit.

4. PWM circuit (Pulse width modulation circuit)

Performs pulse width modulation (PWM) with a differential amplifier circuit and outputs to the REG drive circuit. This circuit operates as follows.

The differential amplifier circuit compares the reference voltage of ZD1 with the voltage divided by R11, R12, and RV1. A triangular wave synchronized with the oscillation period of the converter from the integration circuit is added to the divided voltage, so that a pulse width modulated square wave is generated from the differential amplifier circuit.

As shown in the illustration below, the duty ratio of a terminal voltage of R13 decreases with an increase in the divided voltage and vice versa. The pulse width is controlled in this way.

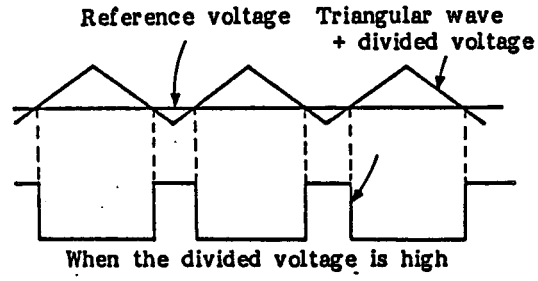

When the divided voltage is high

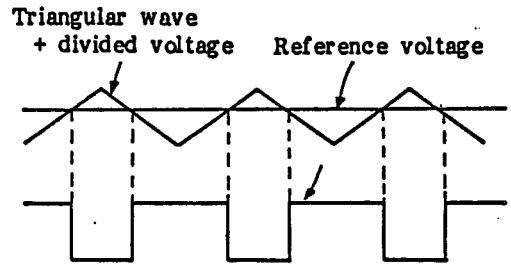

When the divided voltage is low

5. Smoothing circuit (Regulator transistor)

When regulator transistors Q1 and Q2 are on, as shown by the solid line in the illustration below, current flows through choke coil L4 and return capacitor C13 and the magnetic energy is accumulated in L4. When Q1 and Q2 are off, as indicated by the broken line, current flows through the return diodes D1, L4, and C13, so that the magnetic energy accumulated in choke coil L4 is released. By repeating the above operations, the switching of the regulator power transistors Q1 and Q2 is smoothed and the voltage across C13 is converted to DC.

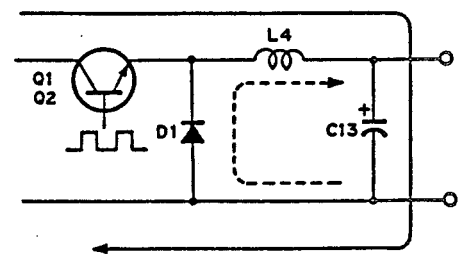

6. Converter drive circuit

When the REG circuit is turned on, a voltage is applied to the converter drive circuit. This voltage is divided by R17, R20, and R23. When the voltage across R23 equals VBE of the drive circuit transistor Q9, the drive transistors Q8 and Q9, which are thyristor-connected, are rapidly turned on.

Although C11 is charged by the voltages across R20 and R23, when Q8 and Q9 are turned on, the current is discharged along the path of C11 →emitter of Q8 →base of Q8 →collector of Q9 →emitter of Q9 →winding 18T of T1 →C11.

The magnetic flux density of T1 increases due to the discharged current and the magnetomotive force is generated, so that a base current flows from T1 through one of the power transistors (Q10 and Q12) of the converter and Q10 and Q12 is turned on. When either Q10 or Q12 is turned on, a current flows through 18T of T1 due to the auxiliary winding 2T of converter transformer T3, so that the magnetomotive force is increased. When the magnetic flux density reaches the saturation, the magnetomotive force is disappears, resulting in a reduction of the magnetic flux density to the residual magnetic flux density. Due to this slight reduction, either transistor Q10 or Q12 which has been on, is turned off and a very small voltage with polarity opposite to the previous polarity is induced in each winding of T1, so that the transistor that is on is completely cut off and the off transistor is turned on. When the transistor is turned on, a current flows through 18T of T1 due to the auxiliary winding 2T of converter transformer T3 and the magnetomotive force is increased. When the magnetic flux density reaches saturation, the magnetomotive force disappears and the magnetic flux density decreases to the residual magnetic flux density. Due to this slight reduction, either transistor Q10 or Q12 which has been on is turned off and a very small voltage with polarity opposite to the previous polarity is induced in each winding of T1, so that the transistor that is on is completely cut off and the off transistor is turned on. When the transistor is turned on, a current with polarity opposite to the previous polarity flows through 18T of T1 due to the auxiliary winding 2T of converter transformer T3, so that the magnetomotive force is increased and the transistor is completely turned on. When the magnetic flux density reaches the negative saturation, the magnetomotive force disappears and the magnetic flux density is reduced to the negative residual magnetic flux density, so that the on transistor is cut off and the other transistor is turned on.

The above operations are repeated continuously, so that drive currents flow through the bases of Q10 and Q12. When Q8 and Q9 are turned on and the converter transformer oscillates, a current flows through the closed loop of the auxiliary winding 2T of the converter transformer, C10, D6, and D7, reducing the base potential of Q9. Thus, Q8 and Q9 are cut off when the oscillation continues.

7. Protection circuit

An overcurrent protection circuit detects the secondary overcurrent on the primary side, stops the oscillation of the converter, and reduces the secondary output voltage to zero, thereby protecting the device. This protection circuit operates as follows.

The voltage drop of R25 is integrated and divided, then input to the base of Q9 through D4. When this voltage exceeds VBE of Q9, transistor Q9 is turned on. At this time, the winding 18T of T1 is short-circuited by D3 and Q9, so that the magnetomotive force of T1 is reduced to zero and the oscillation is stopped.

8. Converter circuit

A drive current is alternately sent to the bases of Q10 and Q12 from the converter drive circuit. When Q10 is on and Q12 is off, a current flows along path A. When Q10 is off and Q12 is on, a current flows through path B and is converted to a square wave voltage, generating an alternative current.

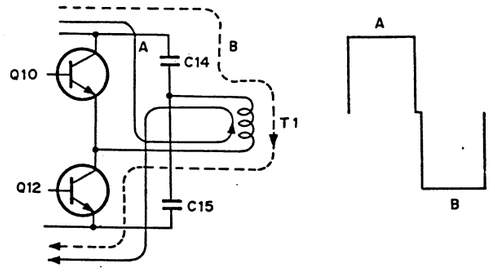

9. Integration circuit

The square wave of the auxiliary winding 3T of converter transformer T3 is integrated by R15 and C8 to produce a triangular wave. This triangular wave is input to the PWM circuit, so that the regulator performs pulse width modulation.

10. Rectifier circuits (I), (II), (III), (IV)

Square waves proportional to the number of windings appear the output of the converter transformer. These square waves are rectified and converted to a direct current.

11. Filter circuits (II), (III), (IV), (V), (VI)

The direct current derived from the rectifier circuit is passed through two π low-pass filters to reduce the high-frequency noise and then output.

12. Overvoltage protection circuit

When the voltage abnormally increases due to a faulting primary REG transistor or the like, the overvoltage protection circuit makes SCR1 operative to short-circuit the secondary output, thereby protecting the device. This overvoltage protection circuit operates as follows.

A reference voltage is applied from ZD2 to input pin 2 of comparator IC1. A detection voltage proportional to the output voltage is applied to pin 3. When this voltage exceeds the reference voltage, the output voltage of pin 1 of IC goes high to turn on Q11. Thus, the gate voltage of SCR1 is applied to turn on SCR1.

BVU-850P BLOCK DIAGRAM

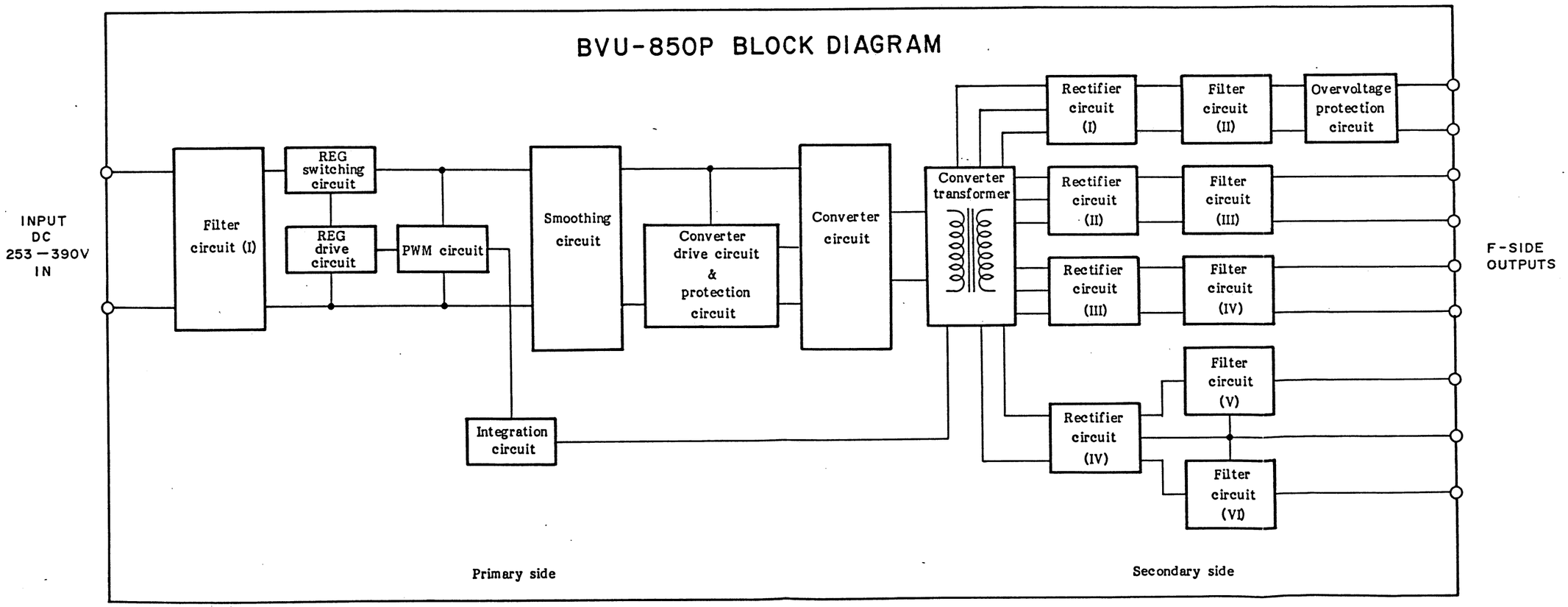

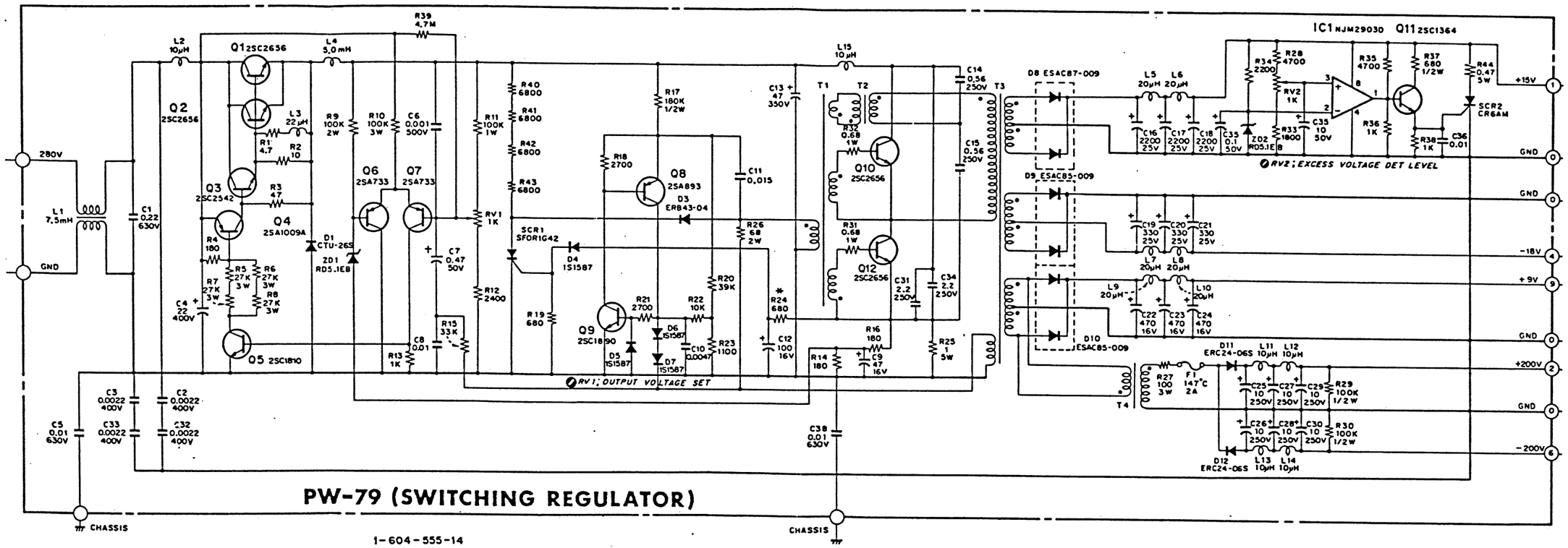

PW-79 (SWITCHING REGULATOR)

1-604-555-14

SECTION 9

SIGNAL DESCRIPTION

SECTION 9
SIGNAL DESCRIPTION

<Light and Color>

Light beams are electromagnetic waves having specific frequencies, and their attributes vary according to the wavelengths that correspond to their frequencies. Light is perceived by the human eye as color according to its wavelength (nm). The shortest wavelength that can be perceived by the human eye is approximately 380(mμ; milli-microns) and the longest wavelength is 780(mμ). Spectral distribution of sunlight and color is shown in Fig. 1.

Color produced by a specific wavelength is known as a primary color. Light perceived by the human eye is usually a mixture of colors. This mixture of colors can be separated into its component colors. Resultant wavelengths obtained through spectral analysis is known as light spectra. Spectral distribution dispersing sunlight into seven different wavelengths using a prism is shown in Fig. 2.

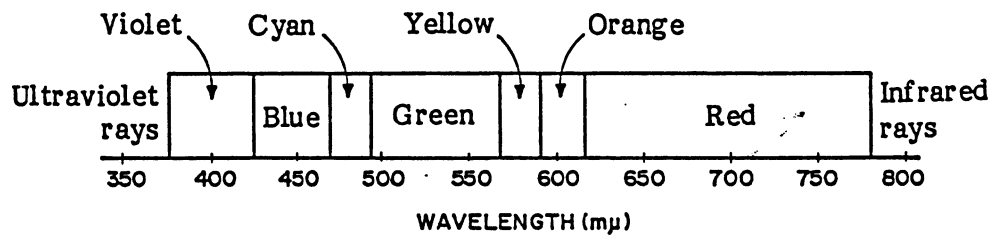

Fig. 1 Relation between Light Wavelength and Color

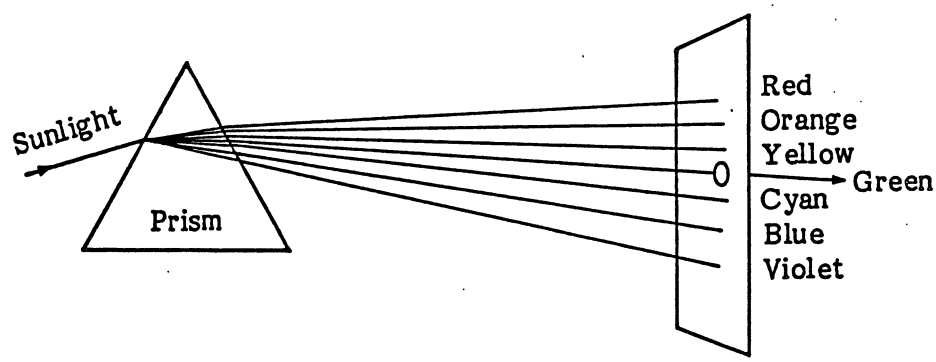

Fig. 2 Spectral Analysis of Sunlight by Prism

<Three Primary Colors of Light and Three Properties of Color>

The spectral distribution of sunlight is shown in Fig. 2. Any color can be produced by mixing single colors. The three primary colors of a color television are red, green and blue.

The same colors seen in nature can be produced by a mixture of these three primary colors. Colors obtained by mixing the three primary colors; red (R), green (G) and blue (B) of color television systems are shown in Fig. 3.

A mixture of the three primaries is known as an additive mixture while creating a new color by mixing paints is known as a subtractive mixture. The three primary colors used in a subtractive mixture are cyan, magenta and yellow (the complementary colors of red, green, and blue). Since color reproduction of color televisions is achieved using phosphers of the three primary colors, the additive mixture principle of R,G,B is used. The color reproduction of color film is achieved by a subtractive mixture.

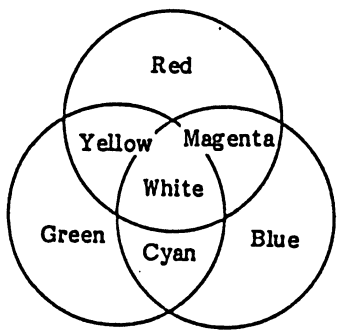

Additive mixture

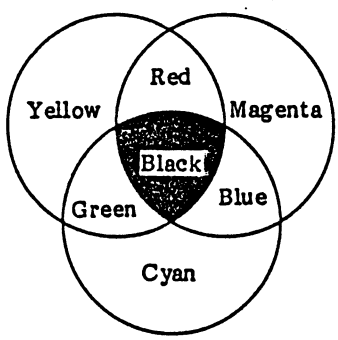

Subtractive mixture

Fig. 3 Three Primary Colors and Mixture

Color has three characteristics, known as the three properties of color, and they are used to express color in qualitative terms.

(a) Hue

Hue means the type of color, such as red, green, blue, yellow, etc.

(b) Saturation

Saturation expresses the degree to which a specific color is whitened. Thus, the saturation of 100% red is pure red. The saturation of 50% red is red that is half whitened.

(c) Luminance

Luminance means the brightness of a color. When a color has much energy, it looks bright, when it has little or no energy, it looks dark.

Hue and saturation are expressed in terms of chromaticity, while brightness is expressed quantitatively in terms of luminance. Chromaticity is shown in the CIE (International Commission on Illumination) chromaticity diagram of Fig. 4. Any color inside the horseshoe area of Fig. 4 can be located on a line connecting two primary colors. This means that any color can be produced by a mixture of any two colors that form a line.

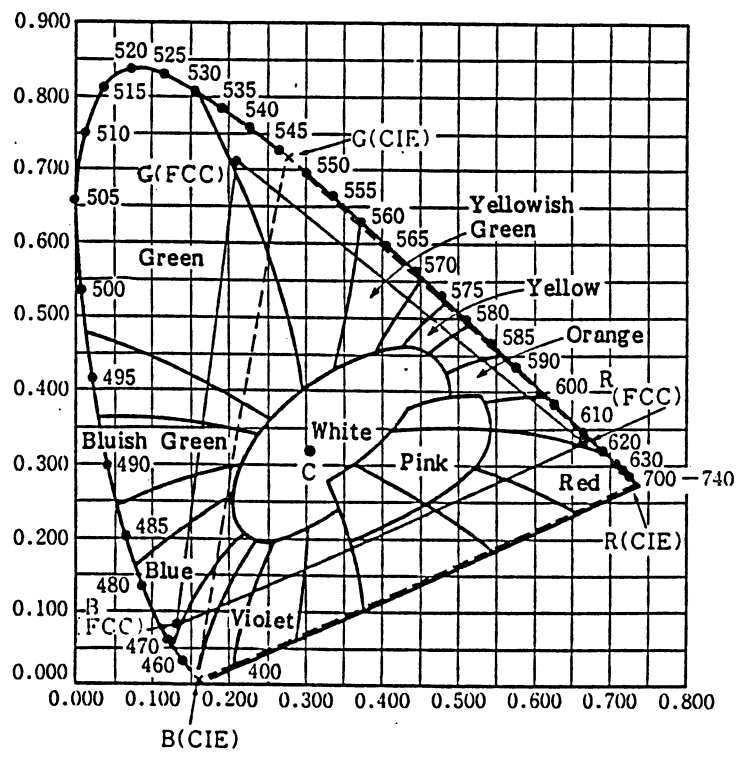

Fig. 4 CIE Chromaticity Diagram and Colors

2 STANDARD TELEVISION SYSTEM

<Television System>

1. Transmission and Reception

Fig. 5 shows the transmission and reception system.

The pickup tube is used to convert an optical image into electrical signals at the transmitting end. The pick-up tube is capable of detecting the strength of incoming light and thereby generating electrical output signals of corresponding strength.

The color transmission system can separate the incoming light into the three primary colors and can output electrical composite signals including both the luminance and chrominance signals. The output signal contains the amplitude modulated (AM) video signal and frequency modulated (FM) audio signal which are transmitted from the antenna. The receiver receives the televised signal and detects these signals at the receiving end in reverse of the transmitting process so that the image is reproduced on the display tube surface.

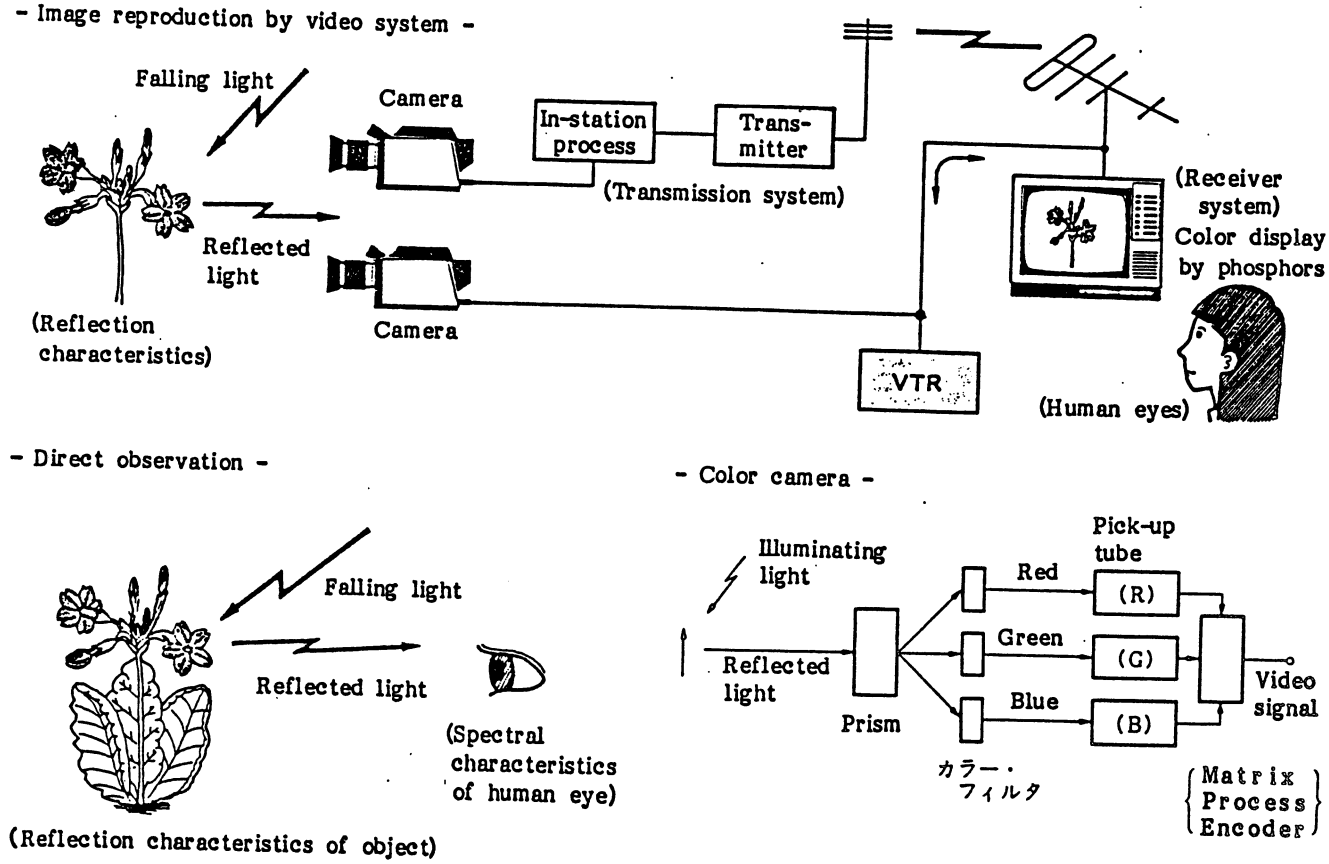

Fig. 5 Transmission, Reception and Color Camera System

2. Television Picture Structure

A television picture consists of numerous points. Each point on the picture is known as picture element. This picture element is the smallest unit comprising a picture. All picture elements are uniform in size but have different levels of gradation. A picture is separated at the transmitting end as shown in Fig. 6. Moreover, these elements are reassembled at the receiving end to form a complete picture. Complete synchronization between the transmitting and receiving ends should be established to reassemble the picture elements that were separated from the picture. A synchronizing signal is thus needed. One complete picture is separated from the left to right and top to bottom. This process is known as a scan.

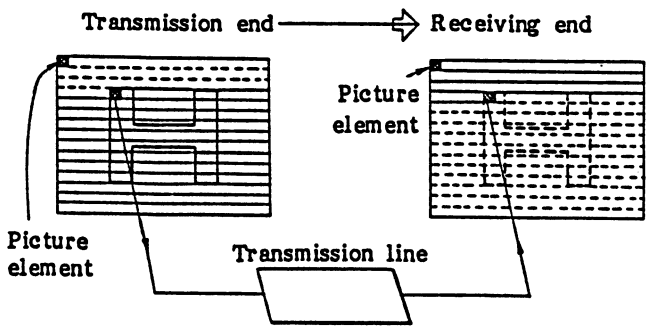

Fig. 6 Screen Diassembling and Reassembling

3. Interlaced Scan

A complete picture is separated into picture elements from the left to right and top to bottom. This is known as a sequential scan. This scan is performed in the following order; 1-1'-2-2', as shown in Fig. 7. Each line is a scanning line. These lines, that form a picture, are known as rasters. The raster size a verticval scan versus a horizontal scan is 3:4. Scanning in the horizontal direction is called a horizontal scan while shifting the horizontal direction is called a vertical scan.

The dotted lines in Fig. 7 are retrace lines. The number of scanning lines differs depending on the different types of television systems. Practical television systems do not employ the sequential scan but the interlaced scan. The interlaced scan divides scanning into two picture scanning times. Sequential scanning of 525 horizontal lines, for instance, produces flicker. The human eye is capable of residual image and can retain the original image for a short period of time. But if it takes 1/30 second until the next image appears at the same picture location, this residual image is lost to the human eye. It perceived by the eye as flickering. This is resolved through interlaced scanning, where 525 lines for instance, are not scanned at once but are divided among two different scannings. The first scan completes the coarse 262.5 lines of scan in 1/60 second while the next scan fills the blanks caused by the remaining 262.5 lines. Practical scanning pictures require 30 pictures per second but 60 coarse pictures are sent. If a display tube has a 50cm width, it is scanned from left to right and retraced back to left, running 1 meter in all.

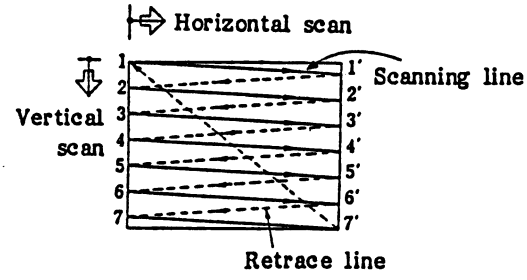

Fig. 7 Sequential Scanning

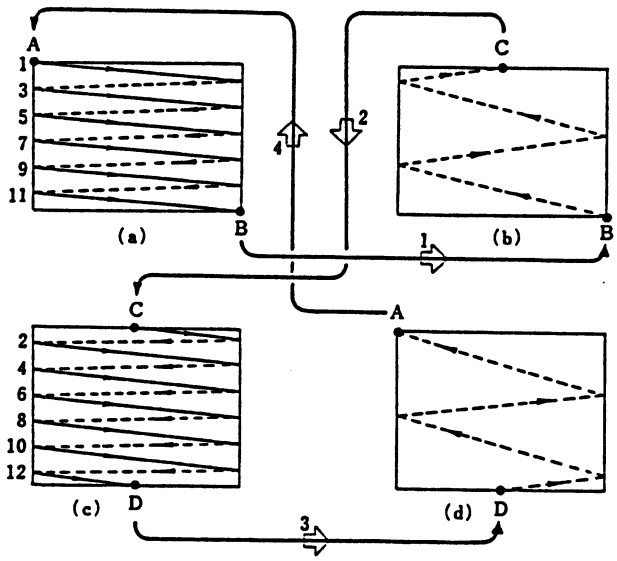

(a) Odd field's horizontal scan
(b) Odd field's vertical scan
(c) Even field's horizontal scan
(d) Even field's vertical scan

Fig. 8 Interlaced Scan

In the NTSC system, for example, there are 525 scanning lines, and 30 pictures are sent per second. Therefore, the beam spot on a display tube runs 15750 meters (15750m = 525 x 30) per second. The beam spot runs on the display tube from left to right to form one scanning line and is then retraced back to the left 10 times as fast. This period is called the retrace period. The sawtooth waveform shown in Fig. 9 is needed to make a fast scan. Fig. 10 shows practical horizontal and vertical scan sawtooth waves. The 15750Hz horizontal scan and 60Hz vertical scan frequencies are used.

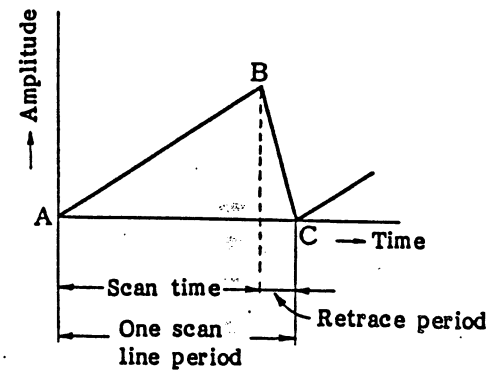

Fig. 9 Sawtooth Wave

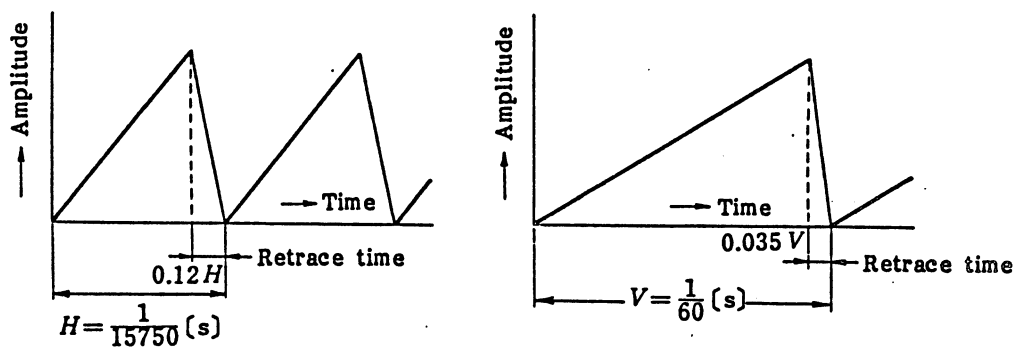

(a) Horizontal scan sawtooth

(b) Vertical scan sawtooth

Fig. 10 Horizontal & Vertical Scan Sawtooth

4. Synchronizing Signals

Synchronizing signals are sent together with the video signal because they are superimposed on the video signal. This causes sync signal to have the same beam spot scanning speed and to take the same amount of time to complete one scan both at the transmitting and receiving ends.

Fig. 11 (a) shows the video signal output from the pickup tube. It requires the frequency response bandwidth from DC to approx. 4MHz. Fig. 11 (b) shows the retrace blanking signal that blanks out the retracing beam spot on the display tube. As Fig. 11 (b) is added to (a), (c) is obtained. When the blanking pulse amplitude is clipped at the pedestal level, (d) is obtained.

This retrace blanking level is used as the black reference level. This black reference level indicates the blackest level which is known as the pedestal level. The sync signal (e) is added during the blanking period so that the composite video signal (f) is obtained. The sync signals shown in the illustration are horizontal sync signals which enable the beam spot to finish the scan and to start retrace. When one scan field is finished, the scan point should be moved upward to the top. This timing is given by the vertical sync signal. The composite video signal including the video signal, horizontal sync and vertical sync signals are shown in Fig. 12.

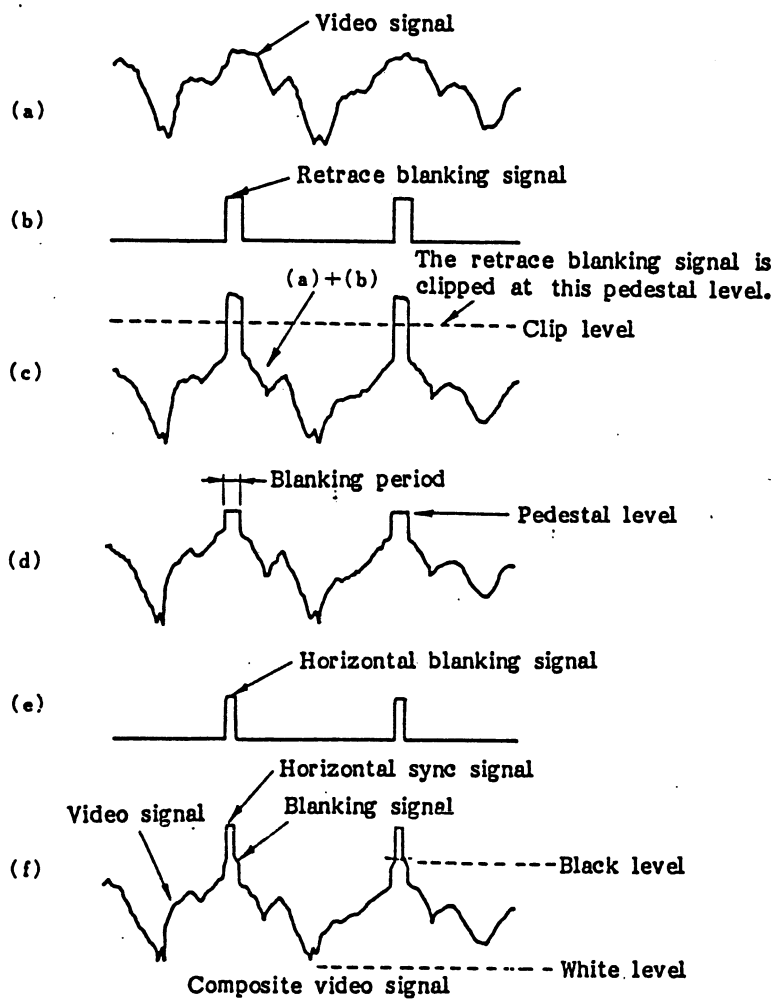

Fig. 11 Video Signal and Sync Signal

The horizontal sync signal is transmitted at each horizontal line in order to maintain horizontal scanning synchronization. The vertical sync is transmitted for every field. The color burst signal, that is the chroma signal reference, is inserted with a minimum of 8 cycles of sinusoidal signals at the back porch of each horizontal sync signal. Fig. 13 shows an enlarged view of a part of Fig. 12's signal.

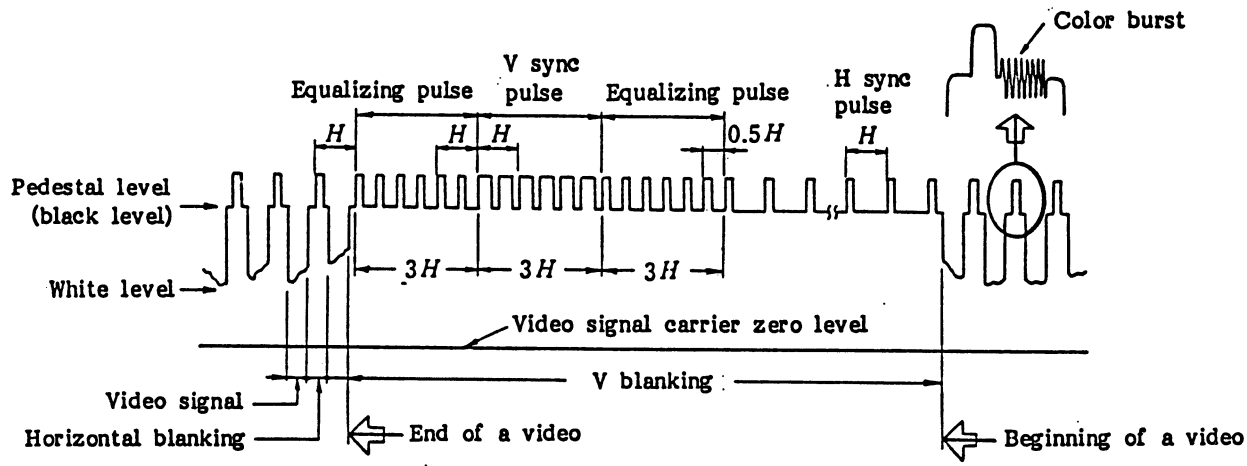

(a) First field

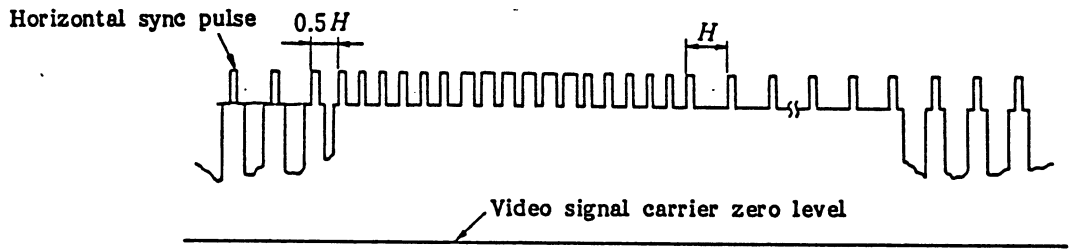

(b) Next field

Fig. 12 NTSC Composite Video Signal

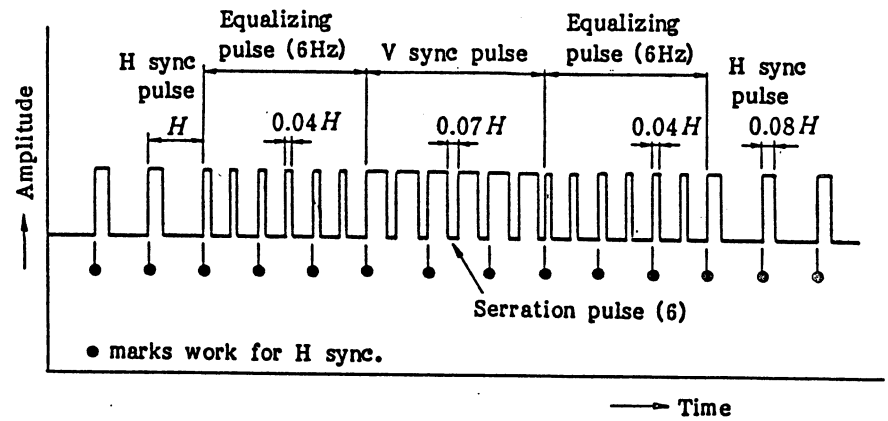

Fig. 13 Sync Signal

3 NTSC SIGNAL

This section describes NTSC (National Television System Committee) television standards. The PAL and SECAM standards are described in a later section. The NTSC system is known as the compatible system because color broadcasts can be received by B/W receivers as well as color receivers where the B/W receiver reproduces a B/W picture and the color receiver reproduces a color picture. The color receiver can also receive B/W broadcasts. This particular system is developed by RCA, and is used in the USA, Canada, Japan, etc. Japan adopted it in 1960.

1. Luminance Signal

The NTSC system sends three types of color information whenever an object has a large area. It sends only two types of color information whenever ever an object has a medium sized area and only B/W information when an object has a small area. Since chroma information sends only hue and saturation information, brightness information for small sized B/W areas as well as large sized colored areas must also be sent. The signal representing the brightness and darkness of an object is known as the luminance signal or Y signal. The luminance information for a color broadcast is the same as that for a B/W broadcast. This luminance signal is generated by adding 59% green pickup tube output, 30% red pickup tube output and 11% blue pickup tube output.

$$Y = 0.59G + 0.30R + 0.11B \qquad (3.1)$$

The above equation was selected because it is the best suited for human eye color sensitivity.

2. Color Difference Signal

Color difference signals, R-Y, G-Y and B-Y are used in transmitting color information. These color difference signals are produced by subtracting the luminance signal (Y signal) from the R, G and B color signals. If the equation (3.1) is applied to all color difference signals, the following equations are obtained.

$$\begin{aligned} R-Y &= R-0.59G-0.30R-0.11B \\ &= 0.70R-0.59G-0.11B \qquad (3.2) \\ G-Y &= G-0.59G-0.30R-0.11B \\ &= 0.41G-0.30R-0.11B \qquad (3.3) \\ B-Y &= B-0.59G-0.30R-0.11B \\ &= 0.89B-0.59G-0.30R \qquad (3.4) \end{aligned}$$

All three color difference signals are not needed for transmission purposes. Only the two color difference signals of (R-Y) and (B-Y) and the luminance (Y) signal are necessary. Consequently, the NTSC system generates the (R-Y), (B-Y) and Y signals and the G-Y signal is generated at the receiver end using the (R-Y), (B-Y) and Y signals. The G-Y signal is obtained by adding 0.51(R-Y) and 0.19(B-Y) derived as follows from equations (3.2), (3.3) and (3.4).

$$\begin{aligned} 0.51(R-Y) &= 0.51(0.70R-0.59G-0.11B) \\ &= 0.36R-0.30G-0.056B \qquad (3.5) \\ 0.19(B-Y) &= 0.19(0.89B-0.30R-0.59G) \\ &= 0.17B-0.057R-0.11G \qquad (3.6) \end{aligned}$$

Equations (3.5) and (3.6) are added.

$$\begin{aligned} &0.51(R-Y)+0.19(B-Y) \\ &\quad = 0.36R-0.30G-0.056B+ \\ &\quad\quad 0.17B-0.057R-0.11G \\ &\quad = -0.41G+0.30R+0.11B \qquad (3.7) \end{aligned}$$

The equation (3.7) is equal to -(G-Y) from equation (3.3). Therefore, G-Y is obtained by reversing the polarity of equation (3.7).

$$G-Y = 0.41G-0.30R-0.11B$$

If the Y signal is added to the color difference signals, the equations designated as (3.8) are obtained to produce the RGB signals.

$$(R\text{-}Y) + Y = R$$
$$(G\text{-}Y) + Y = G \qquad (3.8)$$
$$(B\text{-}Y) + Y = B$$

Current NTSC systems are sending I and Q signals instead of R-Y and B-Y signals. The I signal derives its name from the fact that it is In-phase with the chroma subcarrier. The Q signal derives its name from the fact that this signal is 90 degrees phase different (quadrature phase) from the chroma subcarrier. If the I signal is transmitted, all the colors along the orange-to-cyan axis of Fig. 3-1 can be sent. If the Q signal is transmitted all the colors along the green-to-magenta axis can be sent. Fig. 3-2 shows the R-Y, B-Y, I and Q signals' phase relations as a vector display.

The Q signal axis leads the B-Y vector by 33 degrees. The I signal vector leads the R-Y vector also by 33 degrees. The I and Q signals are quadrature (90 degrees) phase related. Selection of either R-Y/B-Y signals or I/Q signals produce the same results in terms of chroma signal processing. However, I/Q signals are selected because the characteristics of these signals are the most suitable for human eyes.

Fig. 3-3 shows that the I signal has a 1.5MHz bandwidth while the Q signal a 0.5MHz bandwidth.

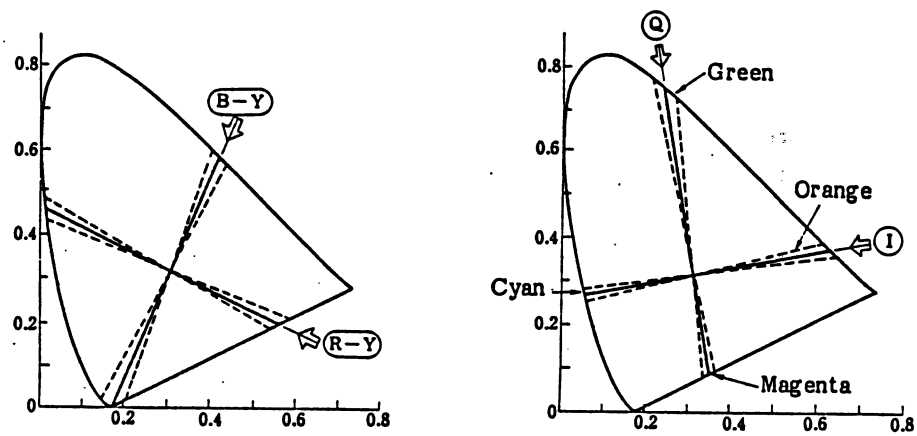

(a) R-Y, B-Y axes on chromaticity diagram

(b) I, Q axes on chromaticity diagram

Fig. 3-1 R-Y, B-Y Axes, and I, Q Axes on Chromaticity Diagram

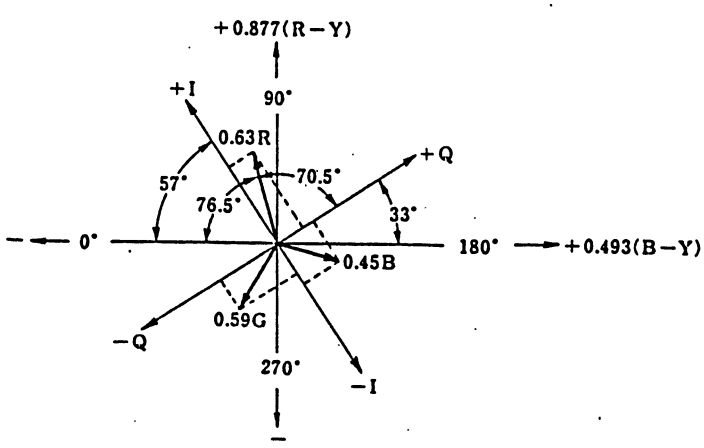

Fig. 3-2 Relations between R-Y, B-Y, I and Q Signals

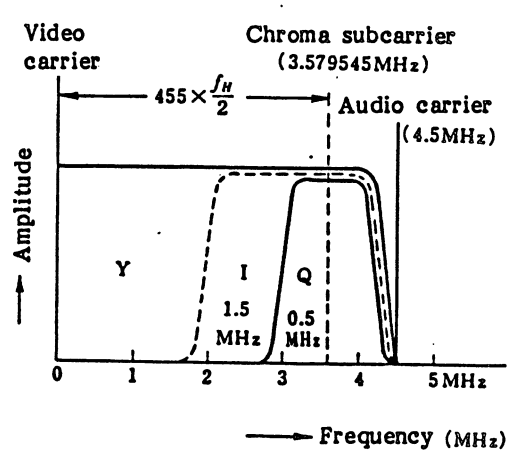

Fig. 3-3 Luminance and Chrominance Signals' Bandwidth

3. Frequency Interleaving

Frequency interleaving consists of finding vacant frequency areas and inserting other signals into these areas. For example, the vacant frequency areas of the luminance signal are found and the chroma signal spectrum is inserted in these areas. Television signals do not use its full bandwidth but only a 0 to 4MHz bandwidth. The energy spectrum of a television exists as a group and not as a continuous distribution of the energy spectrum. This energy spectrum exists every 15750Hz apart in he NTSC system because of a 15750Hz horizontal sync that exists continually regardless of the video signal content.

The harmonics of a 15750Hz horizontal sync is shown in Fig. 3-4. Each harmonic has a sideband signal that is generated by vertical sync, 60Hz apart from each other. Moreover, major spectrum energy exists 15750Hz apart where vacant areas exist between the 15750Hz harmonics. The frequency interleaving method inserts a chroma signal into these vacant areas.

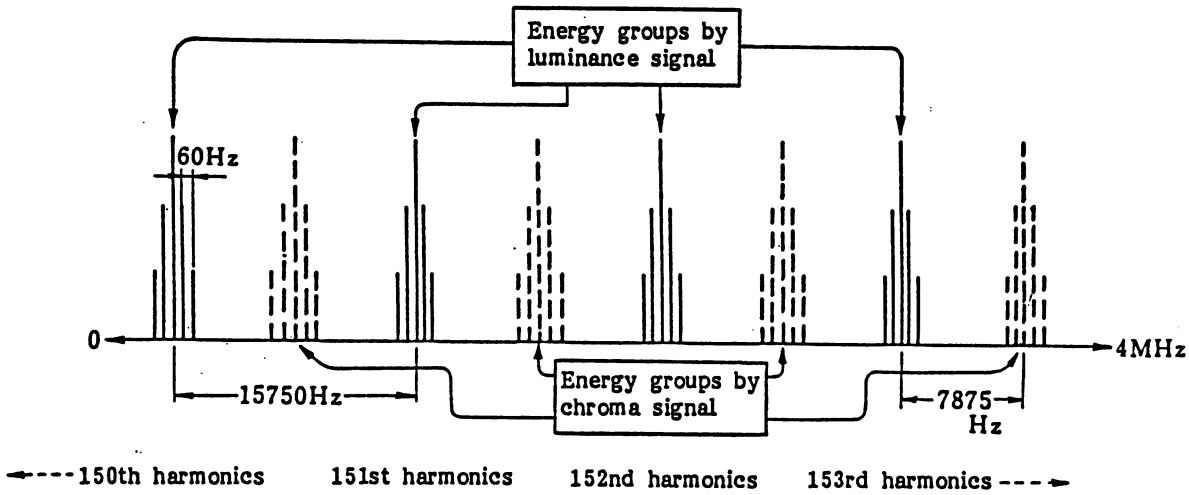

(a) Chroma signal is inserted between luminance signal

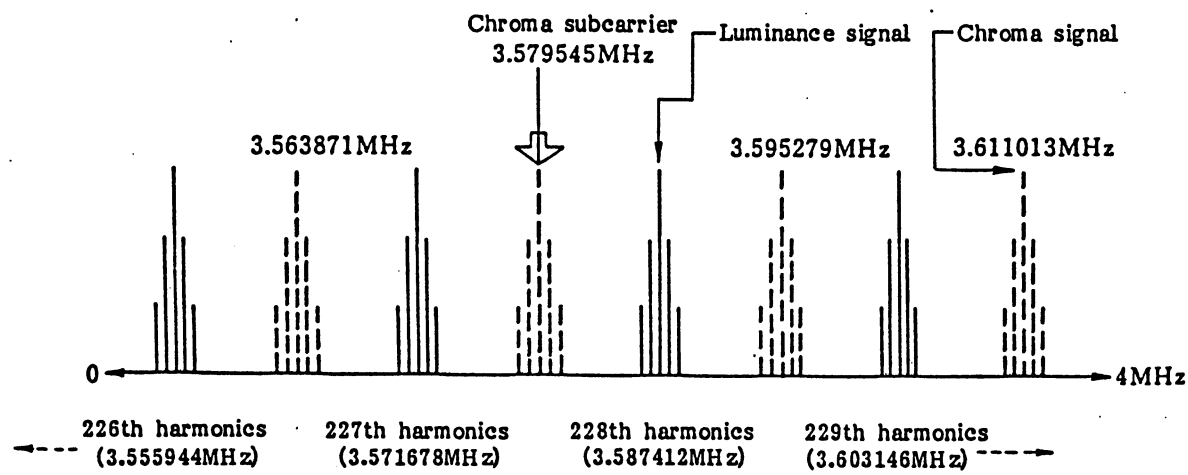

(b) Chroma subcarrier and sideband locations

Fig. 3-4 Frequency Interleaving

To provide frequency interleaving, the chroma subcarrier frequency is selected by 1/2 times an odd number of the horizontal scan frequency. It is otherwise known as 3.58MHz. This frequency is the 455th multiple of 7875Hz where 787Hz is 1/2 of the 15750Hz horizontal scan frequency. The odd multiple of 7875Hz is selected as the chroma subcarrier.

Chroma subcarrier frequency = fH/2 x 455 (3.9)

,where fH is the horizontal sync frequency.

The chroma subcarrier frequency in equation (3.9) is located between the 227th and the 228th harmonics of the horizontal scan frequency. One of the advantages of using the frequency interleaving method is that the beat pattern casused by the chroma subcarrier signal, is decreased, during color broadcast reception. Fig. 3-5 shows the effects of this method. Fig. 3-5 (a) is the Y signal of the 1st line of a picture. In (b), the corresponding chroma signal of the same line is shown. The Y signal is sent to a display tube to produce contrast. The chroma signal (b) is also sent to the display tube to produce contrast along with the contrast produced by the Y signal. Since the chroma subcarrier frequency is synchronized with the horizontal sync and because the chroma subcarrier freuqency is an odd multiple of 1/2 the horizontal scan frequency, the chroma signal of the next line is represented as dotted line (c) in Fig. 3-5. This line has the reverse polarity of the solid line (a) of the 1st line. Therefore, adding (a) and (c) of Fig. 3-5, produces (d) which means that the contrast caused by the chroma signal is cancelled so hat only the Y signal can be seen on the display tube.

Consequently, if chroma subcarrier signal frequency is selected according to equation (3.9), the contrast produced by the chroma subcarrier is made less visible by the effect of the next scanning line. The number 455 was selected in equation (3.9) which locates the chroma subcarrier frequency in the upper part of the video signal frequency.

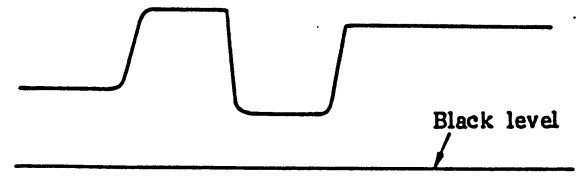

(a) Luminance (Y) signal

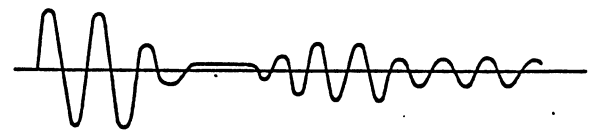

(b) Chroma signal (first frame-scan)

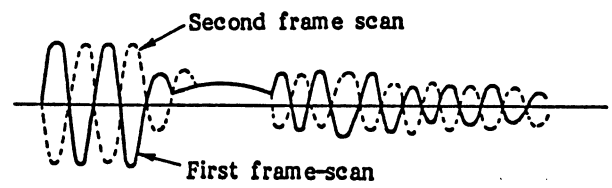

(c) Chroma signal (added output of the first frame-scan and second frame-scan)

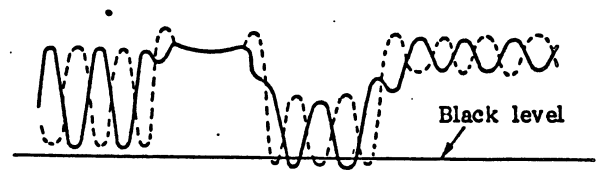

(d) (a) + (c)

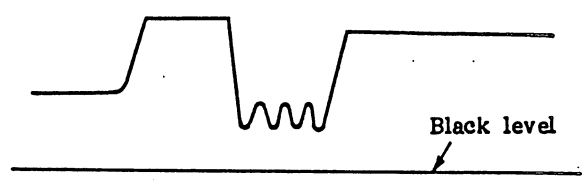

(e) Average brightness by scan

Fig. 3-5 Effect of Frequency Interleave

4. Chroma Subcarrier Freuqency, Horizontal Scan Frequency and Vertical Scan Frequency

The chroma subcarrier frequency is selected as 3.579545MHz in NTSC, the horizontal scan frequency as 15734.264Hz ± 0.047Hz, and the vertical scan frequency as 59.94Hz (2/525 x 15734.264Hz). The following are the reasons for these selections.

The audio carrier is selected to be 4.5MHz higher than the video carrier. When the video carrier is detected, a beat signal of 920kHz (4.5MHz - 3.58MHz) is produced when the video carrier interferes with the audio carrier. Therefore the chroma subcarrier frequency is selected making the 920kHz beat an odd multiple of 1/2 the horizontal scan frequency even though the audio carrier is 4.5MHz higher than the video carrier.

Since the frequency between the video carrier and audio carrier must be 4.5MHz apart, and because the subcarrier frequency is selected so that the 920kHz beat frequency is an odd multiple of 1/2 the horizontal scan frequency, the 920kHz beat frequency can be interlaced by selecting the proper horizontal scan freuqency as shown below.

The horizontal scan frequency (fH) is selected so that its 286th harmonics becomes 4.5MHz.

$$fH = 4.5 \times 10^6/286 = 15734.264Hz \quad (3.10)$$

The chroma subcarrier frequency (fc) is selected as an odd (455th) multiple of 1/2 of 15734.264Hz.

$$fc = 15734.264/2 \times 455$$
$$= 3.579545MHz \quad (3.11)$$

The frequency difference between 4.5MHz and 3.579545MHz, i.e. the beat frequency becomes 0.920455MHz which is the odd (117th) harmonic of 1/2 the horizontal scan frequency.

$$15734.264/2 \times 117 = 0.920455MHz$$

The vertical frequency (fv) is selected so that the horizontal scan frequency (fH) is an odd (525th) multiple of fv.

$$fv \times 252 = 2 \times 15734.264$$
$$fv = 2/525 \times 15734.264 = 59.94Hz \quad (3.12)$$

5. Chroma Signal Multiplexing

Chroma information is transmitted by amplitude-modulating the 3.58MHz subcarrier with the color-difference signal. Since there are two color-difference signals, both of them will amplitude-modulate two subcarriers if these subcarriers have the same frequency and amplitude, and a 90 degree phase difference to each other. The resultant sideband signals produced by amplitude modulation are mixed to form one modulated chroma output signal. This type of modulation is known as quandrature two phase modulation and its output signals as modulated-carrier chroma signals.

The color-difference signals of R-Y and B-Y are sent to independent modulators where 3.58MHz subcarriers, having a 90 degree phase difference to each other, are amplitude-modulated independently. The outputs of the two modulators are mixed. These modulators are balanced type modulators in which the chroma subcarrier, in the output, is suppressed.

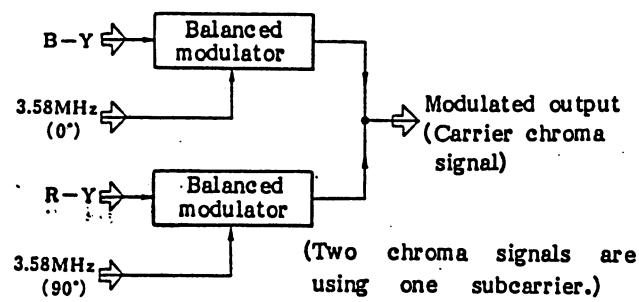

Fig. 3-6 Chroma Signal Modulating Principle

Fig. 3-8 shows a vector display of various colors. It shows that the phase-angle of the subcarrier is determined by an object's hue while the vector length (amplitude) is determined by saturation. The modulation factor of some colors becomes high while the modulation factor of other colors becomes low. Therefore, the coefficient of 1/2.03 is multiplied by B-Y and the coefficient of 1/1.14 is multiplied by R-Y so that the modulation level for all colors are nearly equal.

Fig. 3-9 shows the principle of synchronous detection. The balanced-modulated signal (e) can be detected and outputs the original carrier-chroma signal (b), by feeding the same subcarrier (f) used during the modulation process (a) in order to generate the amplitude modulated signal (g). In short, the feeding of a carrier signal, synchronized with the chroma subcarrier, that was fed to the balanced-modulator in the transmitter, into the receiver's demodulator circuit.

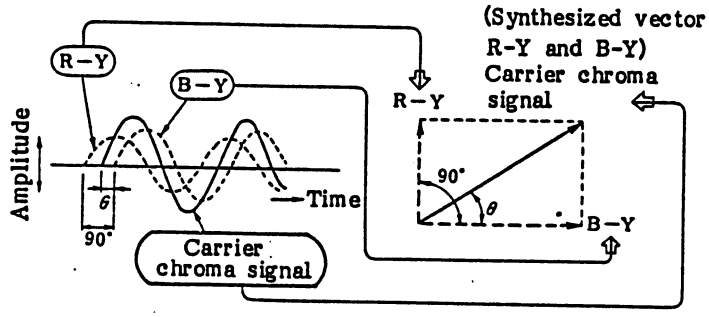

(a) Waveform of carrier chroma signal (b) Vector display of carrier chroma signal

Fig. 3-7 Vector Display of Carrier Chroma Signal

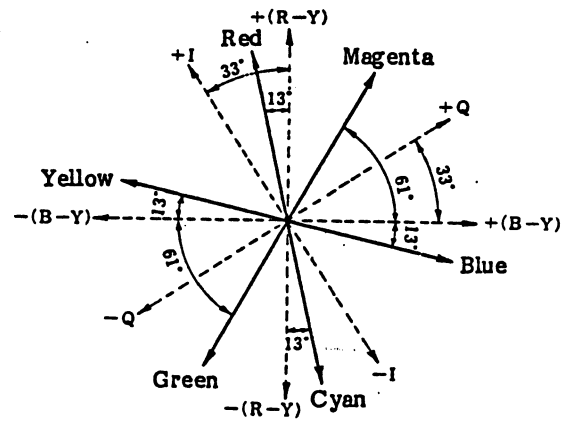

Fig. 3-8 Vector Display of Carrier Chroma Signal

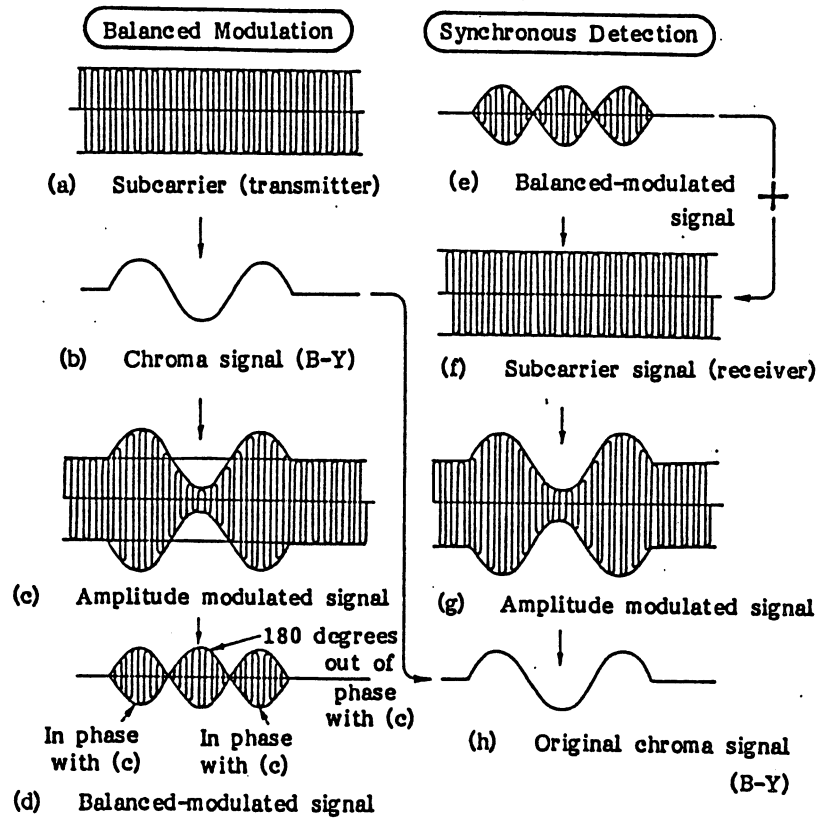

Fig. 3-9 Balanced Modulation and Synchronous Detection

6. Color Sync Signal (Color Burst)

When the chroma signal is sent with the Y signal, the chroma signal can be demodulated by this reference signal.

The minimum eight cycles of this signal is placed in the back porch of the horizontal sync signal, as shown in Fig. 3-10.

7. Composite Color Television Signal

A color television signal is a composite signal having a luminance signal containing a carrier chroma signal and burst signal, as shown in Fig. 3-11. The 3.58MHz sinusoidal signal is superimposed wherever an object has color. The 3.58MHz signal exhibits a large amplitude when the saturation is high. It exhibits a small amplitude whenever the saturation is low.

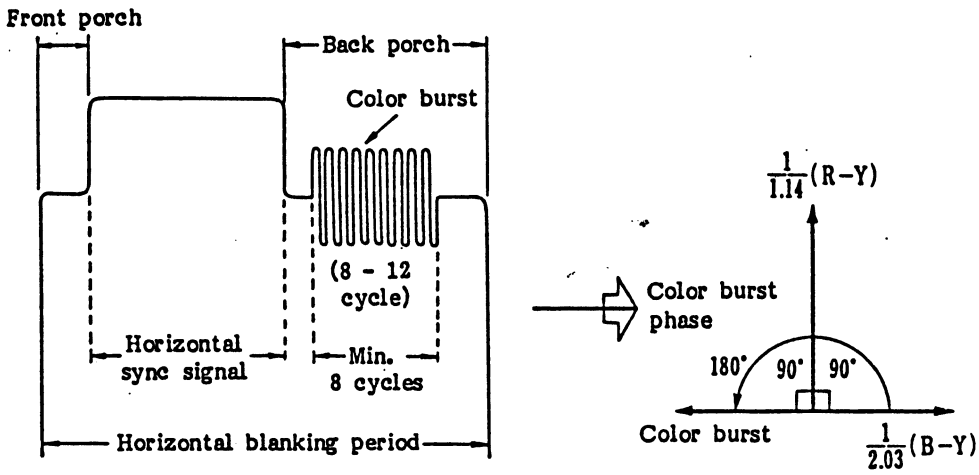

Fig. 3-10 Color Burst Position

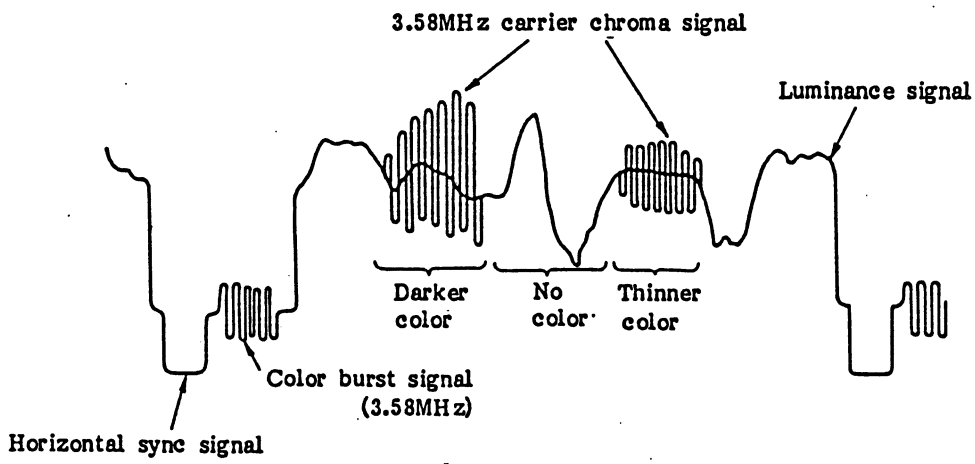

Fig. 3-11 Color Television Signal

4 PAL AND SECAM SYSTEMS

The PAL and SECAM systems were developed in Europe in an effort to provide a uniform color television standard for color television broadcasts. This hoped for standard was to be developed to facilitate program exchange among countries, but resulted in the different color television standards of NTSC, PAL and SECOM. However, a television standards committee has succeeded in setting the standard number of scanning lines at 625 lines, and the subcarrier frequency at 4.43MHz in Europe to facilitate international program exchange.

The PAL chroma subcarrier freuqency of 4.43MHz can be higher than the 3.58MHz in NTSC because the European 625 line system has a wider bandwidth of 8MHz per channel for broadcasting. England, West Germany, Holland, etc. are using PAL and France and the USSR, etc. are using the SECAM system. It is interesting to note that many parts of PAL/SECAM are common to NTSC. Two major differences are how to send the two color-difference signals and how to multiplex them within the luminance signal bandwidth.

1. PAL System

This system was developed by the Telefunken Co. of West Germany. In this system one of the two color-differnece signals is transferred with its phase reversed at every line. This method is known as "Phase Alteration by Line" and is abbreviated as "PAL". This is why the luminance signal and color-difference signals of the PAL system is equal to those of NTSC. However, the modulated-carrier-chroma signal and the color-difference signals of PAL differ from those of NTSC. The encode circuit block diagram is shown below.

The Y signal is the same as that of NTSC. ER', EG' and EB' are gamma corrected signals.

$$EY' = 0.299ER' + 0.587EG' + 0.114EB \quad (1)$$

$$EU' = 0.493\,(EB' - EY') \quad (2)$$

$$EV' = 0.877\,(EB' - EY') \quad (3)$$

The composite signal can be expressed as follows:

$$EM = EY' + EU' \sin\omega ct \pm Ev'.\cos\omega ct \quad (4)$$

$$\omega c = 2\pi fc$$

$$fc = 4.43361875[MHz]$$

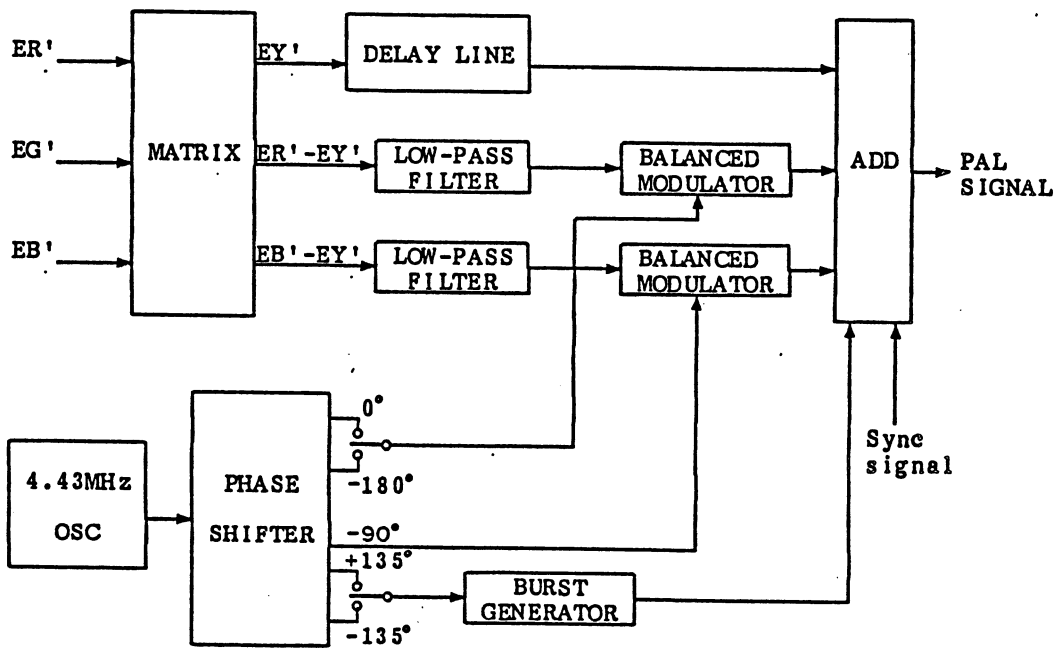

(Selected every one line)

<PAL system color composite signal generator block diagram>

The "±" sign before Ev'ωcos ct is positive for the odd lines of the first and second fields and the even lines of the third and fourth fields. It is negative for the even lines of the first and second fields and the odd lines of the third and fourth fields.

The two color-difference signals from the matrix circuit are passed through the same bandwidth low-pass filters and are applied to a balanced modulator circuit.

The subcarrier phase is reversd at every line for the (ER'-EY') signal. The reason for changing the (ER'-EY') phase 180 degrees at every line, is to correct the phase distortion of the carrier chroma signal during line transmission.

In the PAL system, the subcarrier frequency cannot be locked to the odd multiple of 1/2 the horizontal sync frequency originally selected to decrease dot interference in NTSC. This is because the (R-Y) modulated carrier frequency's spectrum coincides completely with the luminance signal providing the subcarrier frequency is selected as 1/2 the line offset frequency. Therefore, the PAL system selects the 1/4 line offset frequency as its chroma subcarrier signal to decrease the dot effect.

The subcarrier signal (fs) is expressed as follows:

$$fs = (n-\tfrac{1}{4})fH + 25(Hz) \qquad (5)$$

fH = horizontal scan frequency

The last figure, 25(Hz), in the above equation is 1/2 the field frequency and was selected to decrease the carrier chroma signal's dot effect, providing fs is, 1/4 the line offset frequency.

The PAL system has the color sync (burst) signal standard at its inserting position in the trailing edge of the horizontal sync signal or its amplitude is the same as that of NTSC. However, its phase is advanced by +45 degrees or delayed by -45 degrees with respect to the phase of NTSC at every line. The two phases of the burst signal are used as a reference color sync signal and to identify the -(R-Y) line by detecting the difference between the burst signal's two phase.

The chroma decoding circuit block diagram is shown below. The input carrier chroma signal can be obtained from chroma bandpass filter output just as in the NTSC system. This signal is fed to the two chroma demodulator circuits. Further, a one-horizontal period delay circuit is employed in the PAL system. The output signal from the one-line delay circuit is either added to or subtracted from the original signal to generate the original color sync phase, because the subcarrier phase for the (ER'-EY') signal is reversed at every line. A glass type ultrasonic quartz delay line is used.

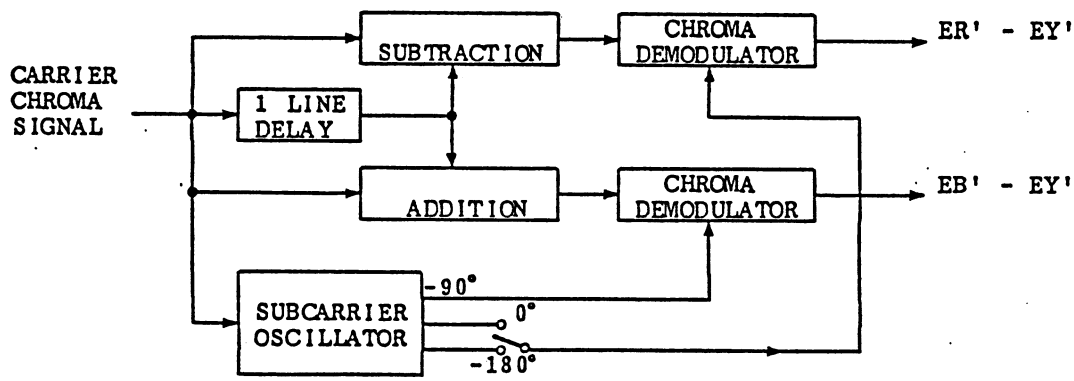

<Block diagram of PAL system color-difference signal demodulator>

The output signals obtained by adding to or subtracting from the original and one-H delayed subcarriers are as follows.

The signals shown in the above table such as (ER'-EY') and (EB'-EY') are still modulated subcarrier signals that have not been demodulated. Therefore, the added signal, 2(EB'-EY'), has constant polarity, and can be sent to the synchronous detector to output the (EB'-EY') chroma signal. However, subtracted signals, such as -2(ER'-EY') and 2(ER'-EY'), change their polarity at every line making it necessary to reverse the polarity of local oscillator outputs before they are used for synchronous detection.

The phase relationships between the burst and carrier chroma signals in the PAL and NTSC systems are shown below.

The addition circuit output is a direct (B-Y) signal, that is, a U signal that can readily be demodulated by he synchronous detector of the (B-Y) chroma demodulator. However, the subtraction circuit provides output whose phase is reversed. This necessitates the phase alternation of the local subcarrier oscillator output signal before it is fed to the (R-Y) chroma demodulator. The phase alternation pulse is generated by the chroma phase detector circuit which identifies B-Y and R-Y, and generates 7.8kHz (half the horizontal scan frequency) in order to trigger the horizontal length pulse generator (astatic MV).

	Subcarrier Polarity		Subtraction output	Addition output
	(ER'-EY')	(EB'-EY')		
•				
•				
•				
n	(ER'-EY')	(EB'-EY')		
n+1	-(ER'-EY')	(EB'-EY')	-2(ER'-EY')	2(EB'-EY')
n+2	(ER'-EY')	(EB'-EY')	2(ER'-EY')	2(EB'-EY')
n+3	-(ER'-EY')	(EB'-EY')	-2(ER'-EY')	2(EB'-EY')
•				
•				
•				

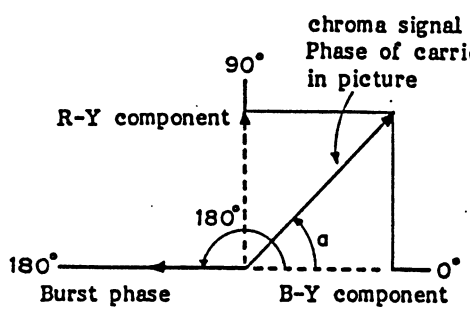

(a) NTSC SYSTEM

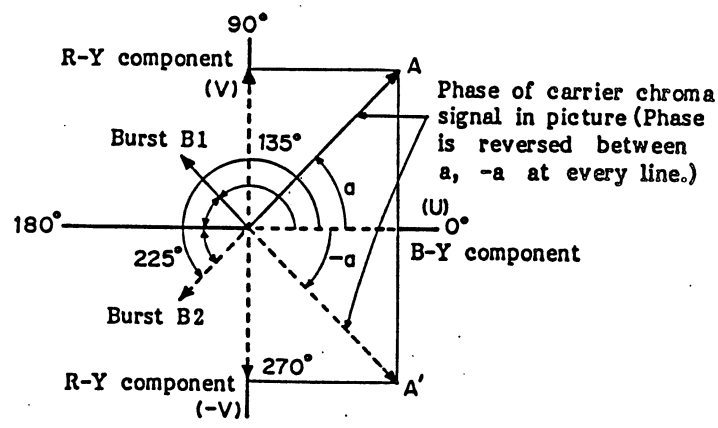

(b) PAL system

The PAL system is characterized as being minimally affected by the phase distortion of a transmission line. The following drawing shows this characteristic by using a vector diagram of the carrier chroma signal.

In this example the PAL carrier color signal vector of color (magenta) (a) has three stimuli; R=1, G=0 and B=1.

"A" in the figure represents the vector of the 1st line signal and is the same as in the NTSC system. The 2nd line signal is sent with the phase of the (R-Y) modulated subcarrier and reversed. This signal is represented as A' and is the second line's vector, that is, magenta.

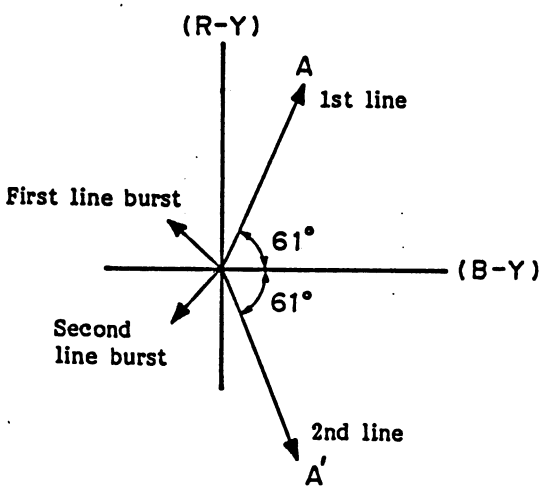

(a)

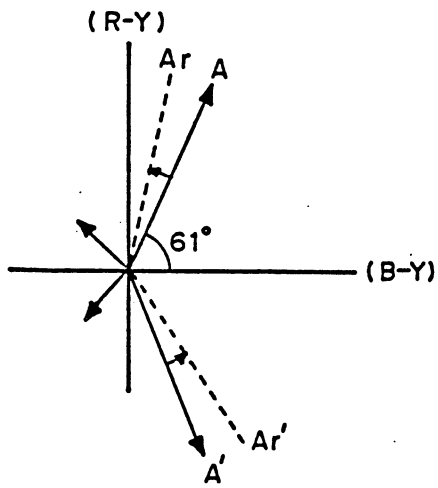

(b)

(b) in the above illustration shows the vector diagram of the carrier chroma signal when it is distorted during line transmission. This distortion shifts the signal's phase in the positive (+) phase direction. The subcarrier phase is advanced to the dotted line in the vector diagram as shown, both from A to Ar and from A' to Ar'. This phase distortion means that color A's shift to Ar results in a reddish color to original magenta of the first line. Also, the second line A' will be bluish to original magenta. Therefore, phase distoriton induced during signal transmission will shift the color hue in the opposite direction of that between two neighbouring lines. If the color-difference signals of two neighbouring lines are added, the phase distortion cancels each other and provides a distortion free color picture.

Illustration (c) shows the phase canceling process as a vector diagram. The PAL system has characteristics that the carrier chroma signal phase distortion has cancelled resulting in an amplitude (saturation) change of the carrier chroma signal. The human eye is less sensitive to saturation changes than to hue changes. The PAL system is able to transmit a more beautiful picture than NTSC if the transmission line has much distortion. Experiments indicate that the maximum allowable tolerance for phase error in the carrier chroma signal is ±10 in NTSC and ±35 in PAL. This means that picture quality deterioration is less for PAL than for NTSC providing the transmission line and/or receiver has phase distortion.

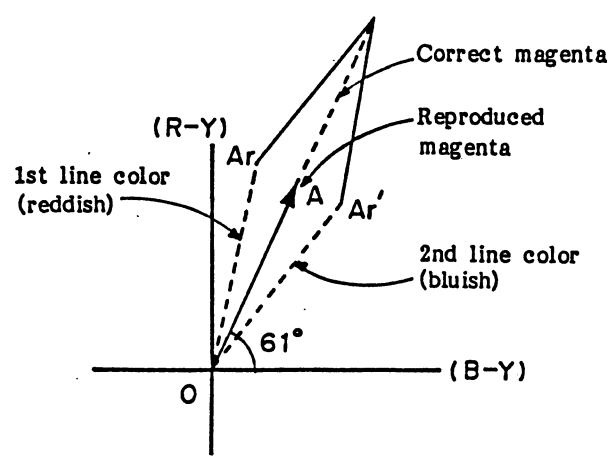

(c)

2. SECAM System

France has developed the SECAM system that sends a color-difference signal sequentially, line by line, so that the receiver memorizes the one-line equivalent chroma information to produce a color image. The Sequential Couleur a Memoire is abbreviated as SECAM. Its block diagram is shown below.

The original SECAM system has been improved several times so that the SECAM IIIb is the system now being currently broadcast in France, etc. The red, green and blue primary color signals from the color camera are encoded into the two color-difference signals (ER'-EY'), (EB'-EY') and luminance EY' just as they are in PAL.

The color-difference signals (R-Y) and (B-Y) are not transmitted simultaneously as in NTSC, but are transmitted alternatingly every horizontal line in SECAM. This line sequential color-difference signal is FM modulated to become a carrier chroma signal to be multiplexed with the luminance signal. The color-difference signals of negative polarity (R-Y) and positive polarity (B-Y) are amplified by 1.9:1.5, and are arranged sequentially, and then finally FM modulated.

SECAM denotes the transmitting color-difference signals as Dr and DB.

$$EY' = 0.30ER' + 0.59EG' + 0.11EB'$$

$$DR = -1.9\ (ER' - EY')$$

$$DB = 1.5\ (EB' - EY')$$

The composite SECAM signal is expressed as follows:

$$EM = EY' + A \cos(\omega c + D\Delta\omega c)t$$

$$\omega c = 2\pi fc$$

where fc changes fCR, fCB at every line.

$$fCR = 4.40625MHz = 282\ fH$$

$$fCB = 4.25MHz = 272\ fH$$

D alternates between DR and DB at every line.

$$\Delta\omega c = 2\pi\Delta fc$$

Δfc is the frequency deviation that alternates between ΔfCR and ΔfCB at every line.

$$\Delta fCR = 280kHz$$

$$\Delta fCB = 230kHz$$

"A" is the coefficient of $D\Delta\omega c$ that is determined by D's amplitude.

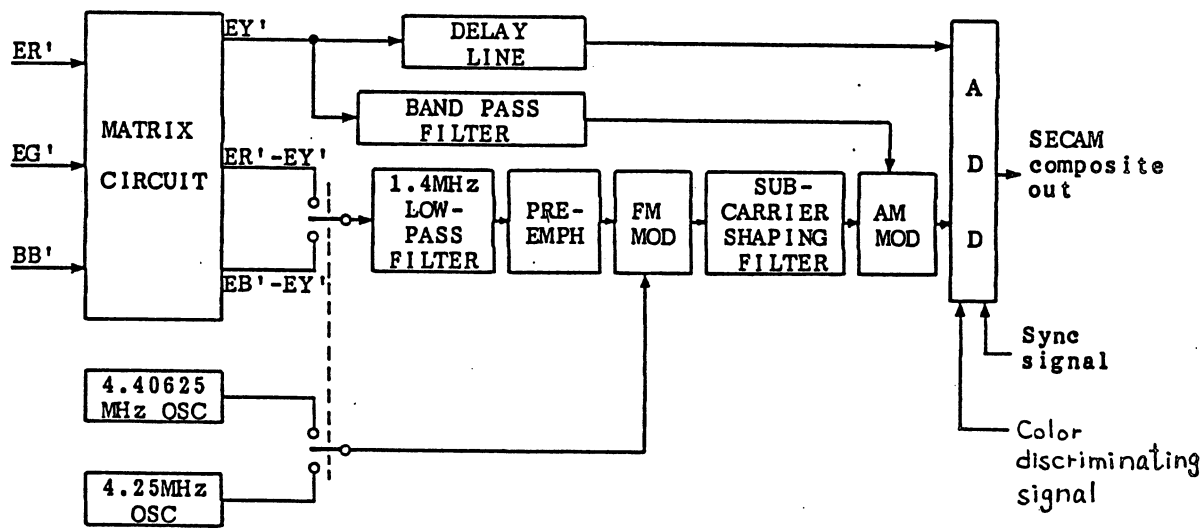

<Block diagram of SECAM composite color signal encoder>

The chroma subcarrier frequency is changed line by line in order to decrease the dot interference between scan lines. The subcarrier frequency is changed by 10fH(=156.25kHz) from one line to the next line. Both frequencies are multiples of the horizontal scan frequency (fH).

The subcarrier phase is also 180 degrees reversed at every field in order to decrease dot interference. The video signal amplitude is gradually decreased in the subcarrier signal area to decrease dot interference, by using a reverse-bell type filter. This filter has the frequency response characteristics shown below.

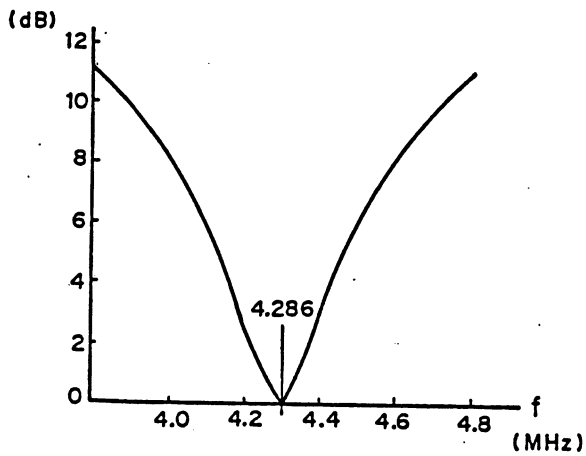

The amplitude modulation circuit located next in the block diagram is a supplementary circuit that functions to decrease the beat-down effect of the luminance high-frequency component when changing into chroma low-frequency components. The two color-difference signals are alternatingly sent one after the other at each line. However, line-identifying signals are produced by modulating the subcarrier signal with the square wave pulse, and are inserted in the nine horizontal periods located in the trailing edge of the vertical retrace period.

The SECAM system is the least affected by the nonlinearity distortion of a transmission system. This system also provides the minimum VTR hue change and a minimum of ghost interference. However, compatibility with B/W signals is best in the NTSC system with PAL and SECAM following in that order.

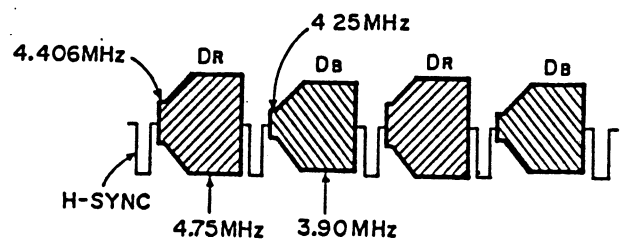

The SECAM color receiver's chroma demodulator block diagram is shown below.
The incoming signal (a) of sequential signals (R-Y) and (B-Y), which alternate according to the line rate, is converted into simultaneous signals (b) and (c) by using a 1H delay line. Switching-over according to the line rate is performed electronically. See the following illustration.

The (R-Y) and (B-Y) signals are the subcarrier signals that are FM modulated by (R-Y) and (B-Y).

The switching circuit can provide the two output signals of color-difference signals (R-Y) and (B-Y) as shown in (b) and (c). However, each output repeats the same signal content two times (two scan periods). This means that chroma vertical resolution power is effectively half the number of scanning lines. The SECAM system does not necessitate the use of a synchronous detection system, but instead works with normal FM demodulator circuits. The rest of the chroma decoding circuit, which produces the three primary colors from the two color-difference signals and a luminance signal, is the same as that in the NTSC and PAL systems.

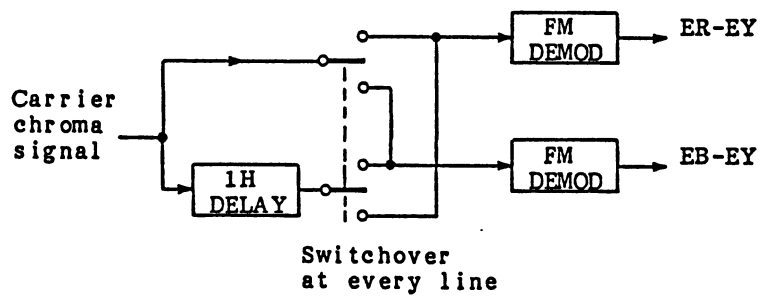

<SECAM system chroma demodulator>

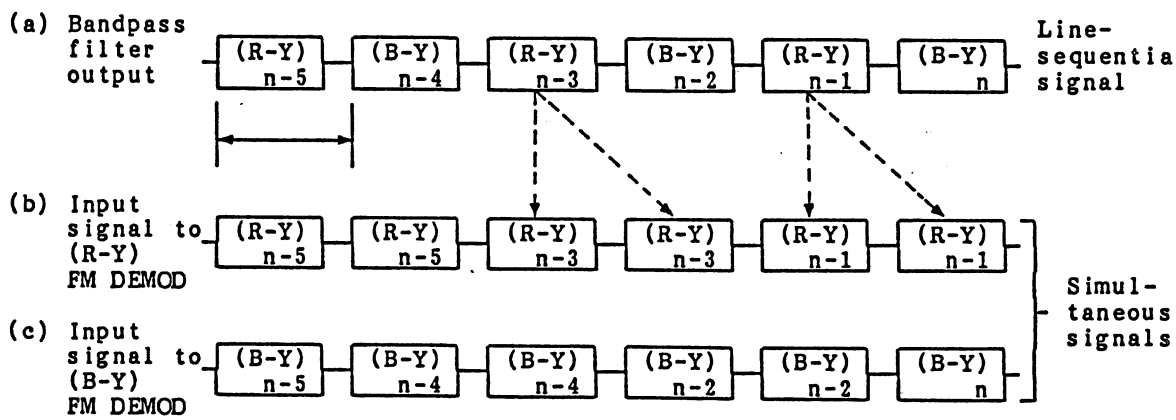

The following illustration shows the SECAM receiver's chroma demodulator circuit. The bandpass filter has a center frequency of 4.286MHz and a bandwidth of ±1.5MHz. A bell shaped filter is then inserted. This filter has the reverse characteristics of that provided by the bell shaped filter in the transmitter end.

The bandpass filter output takes two outputs; one is sent directly to an electronic switch and the other is sent first to the 1H delay line and then to the electronic switch. The electronic switch has a double pole-double throw structure, and is controlled by the color identifying signal sent from the transmitter.

The (R-Y) color-difference signal is sent to the (R-Y) demodulator, and the (B-Y) color-difference signal to the (B-Y) demodulator as determined by an electronic switch. The color identifying signal is included in the (B-Y) signal located in the nine horizontal periods that occur during the vertical retrace period. The color identifying signal is gated by the vertical retrace signal, integrated, sent to the Schmitt circuit, and finally triggers a flip-flop that drives the double-pole double-throw switch electronically.

SECAM is only minimally affected by phase distortion and amplitude distortion of the transmission line. Consequently, hue adjustment and chroma saturation adjustment has become unnecessary. This system has the advantage that it receives the least VTR chroma hue error and the least chroma deterioration caused by ghost interference. But compatibility with B/W television is poor because it cannot use the dot interleaving method. The SECAM system also has a poor S/N ratio, in the weak field strength area, due to its use of a bell shaped filter.

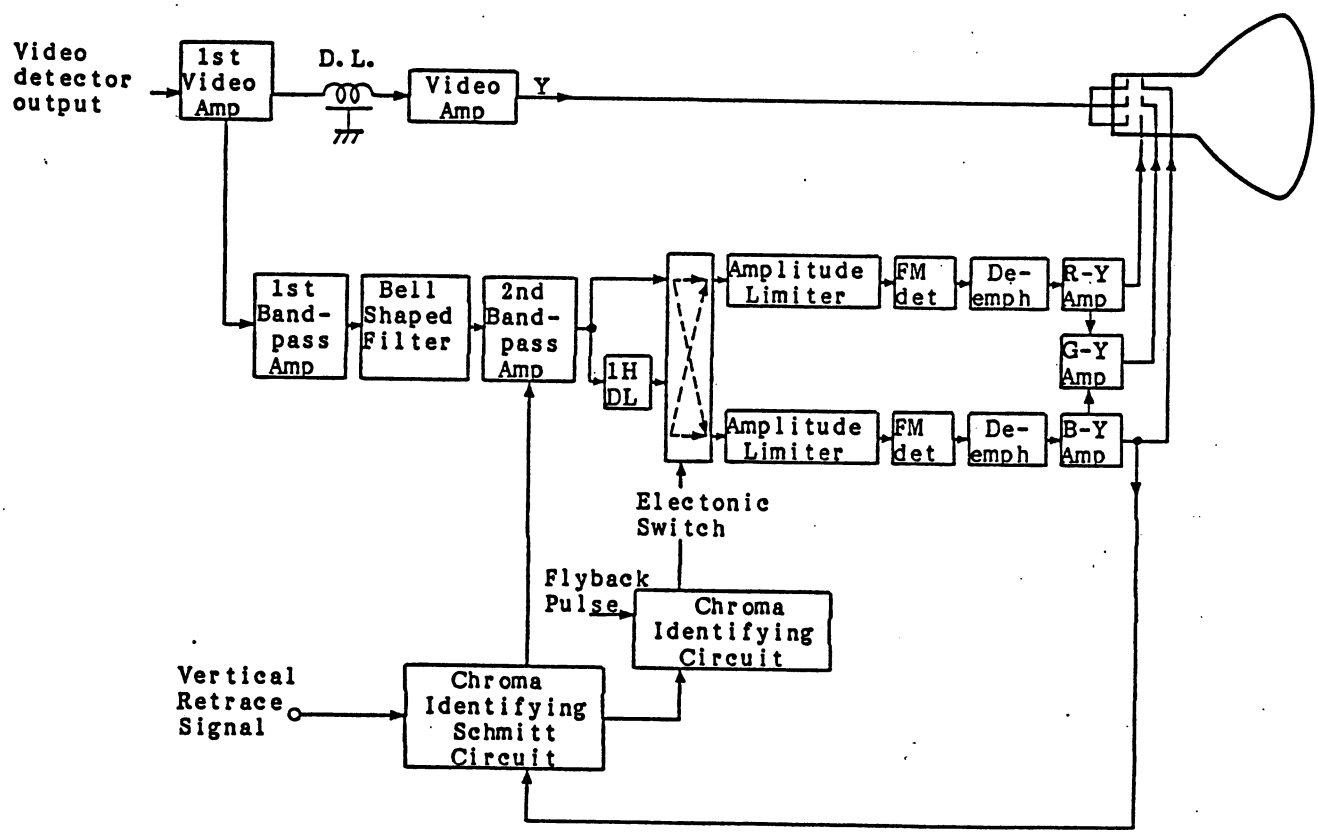

SECTION 10

DOLBY NOISE REDUCTION

SECTION 10
DOLBY NOISE REDUCTION

1-1. Dolby B-Type Noise Reduction

The B-type noise reduction based on a sliding band system improves the S/N ratio by 10dB (max.) in the middle-high frequency range. Fig. 1 shows the encoding characteristics (single signal characteristics) of the B-type noise reduction.

This Dolby B-type noise reduction differs from the sliding band described below, in that the variable filter control signal is passed through the high-band weighting circuit. The B-type noise reduction system configuration is shown in Figs. 2 (a) and (b).

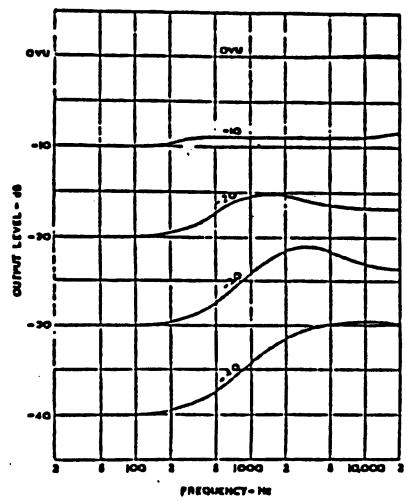

Fig. 1 Encoding Characteristics of B-Type Noise Reduction

Fig. 2 (a) shows the encoding system. Fig. 2 (b) shows the decoding system which has characteristics opposite to the encoding system in the PB mode.

The Dolby noise reduction system consists of a main path with a gain of 0dB and a side chain for sliding band operation.

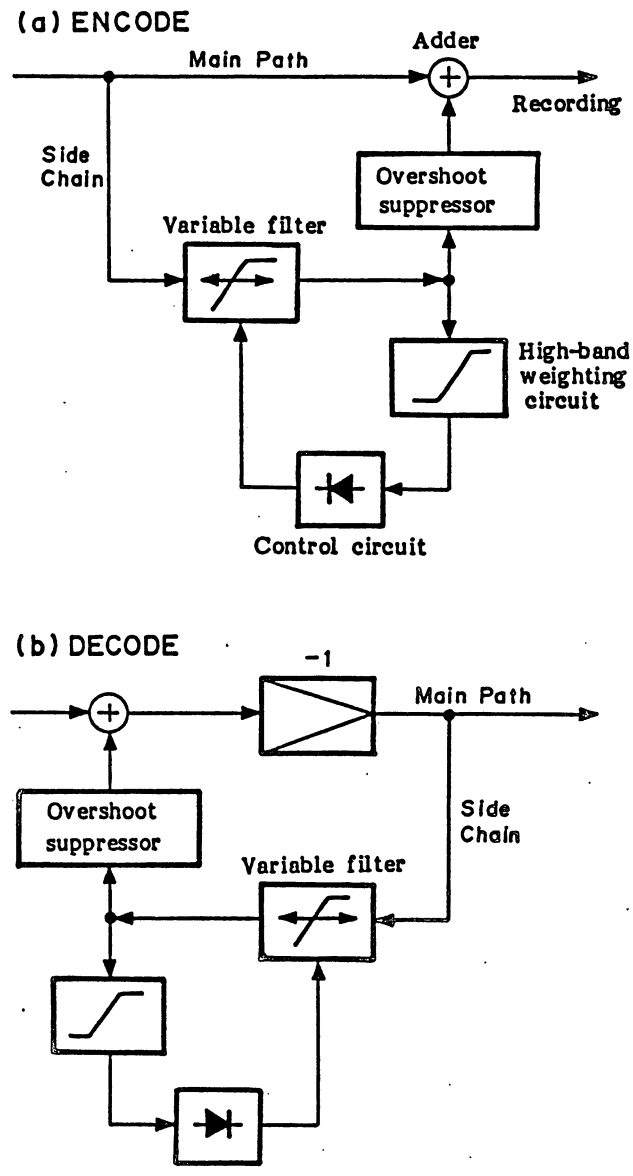

Fig. 2 B-Type Noise Reduction System

(Reference)

Sliding Band System

This system is used for Dolby noise reduction. As shown in Fig. 3, only the high-frequency response is changed according to the input signal frequency. Noises are suppressed at only the high-frequency range. Therefore, the low-frequency signal causes less noise modulation.

The B-type noise reduction variable filter is shown in Fig. 4. Basically, this is a 2-pole filter. When the phase at the side chain is rotated too much, a waveform trough occurs in the synthetic character- istics. Therefore, the pole determined by C1 and R1 is set to the lower position. As a result, the sliding band is inclined less than 6dB/oct.

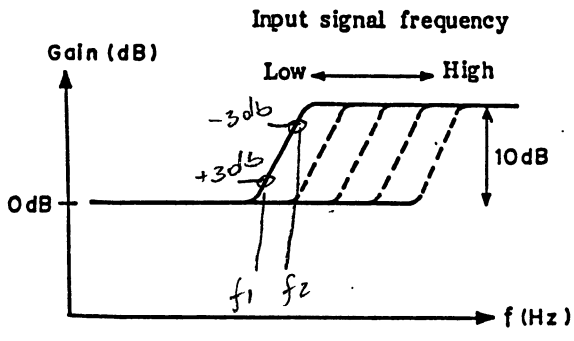

Fig. 3 Sliding Band

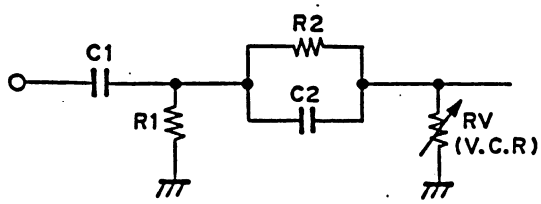

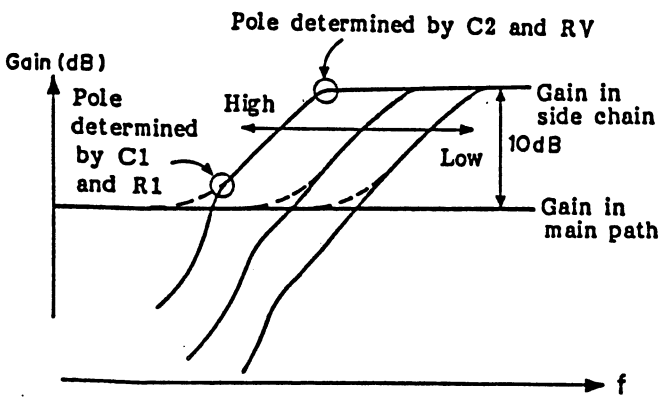

Fig. 4 B-Type Noise Reduction Variable Filter

Fig. 5 shows the two signal characteristics of B-type noise reduction. These characteristics enable the high-level signal noise at the low-frequency range to be suppressed through the high-band weighting circuit. Each signal, encoded by sweeping at -42dB during signal input with a frequency of 100Hz, 200Hz, 500Hz, 1kHz, 2kHz, and 5kHz as reference level is shown in Fig. 4.

The signal passing through the high-band weighting ciruit is sent to a detector circuit as shown in Fig. 6. This figure shows a half-wave rectifier, but a full-wave rectifier has recently been used in combination with the absolute value circuit.

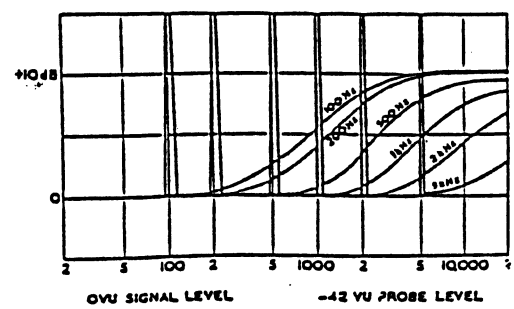

Fig. 5 Two Signal Characteristics of B-Type Noise Reduction

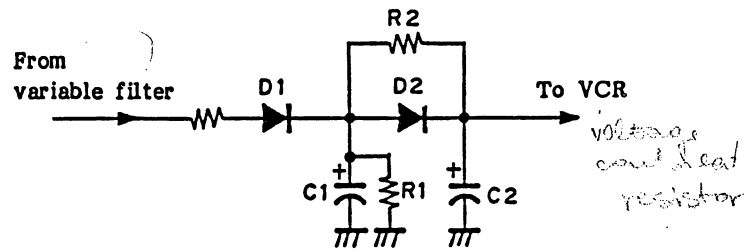

Fig. 6 B-Type Noise Reduction Detector Circuit

The signal which is peak-detected using D1 and C1 is integrated by R2 and C2 and fed to a voltage controlled resistor (VCR) consisting of a variable filter. D2 is used as a signal path during over-signal input and is forward biassed only when the cutoff frequency in the variable filter increases rapidly. In the normal input level, the variable filter has an attack recovery characteristic of about 100ms. When D2 is turned on, the variable filter has a variable attack recovery characteristic of a few ms.

Additionally, the limiter characteristic of the side chain prevents overshoots.

The VCR constituting a variable filter was at first controlled by an FET with a fixed bias (see Fig. 7). The VCR does not require a precise control voltage. It also requires no precise resistance value when the FET is turned on. The control voltage should be inversely proportional to the resistance, and the change range in resistance should be wider than the range required by the variable filter.

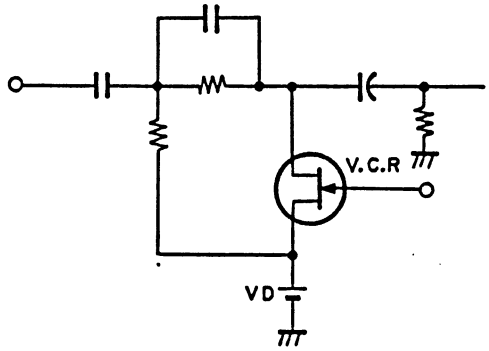

Fig. 7 VCR Controlled Using FET

(1) Control voltage

The VCR has been recently incorporated into an IC. However, the VCR's offset voltage is changed by the control voltage. This may cause audio quality deterioration.

B-type IC's functions are as follows:

(1) An ENCODE(REC)/DECODE(PB) select function is provided.

(2) NR ON/OFF is easily selected.

(3) No adjustment is required.

(4) A LINE OUT (DECODE OUT) function monitors the source (NR OFF) in the REC mode.

(5) A REC OUT (ENCODE OUT) terminal is provided.

In addition, they should have less deviation, less peripheral parts, and low cost.

The actual configuration of a B-type IC is shown in Fig. 8.

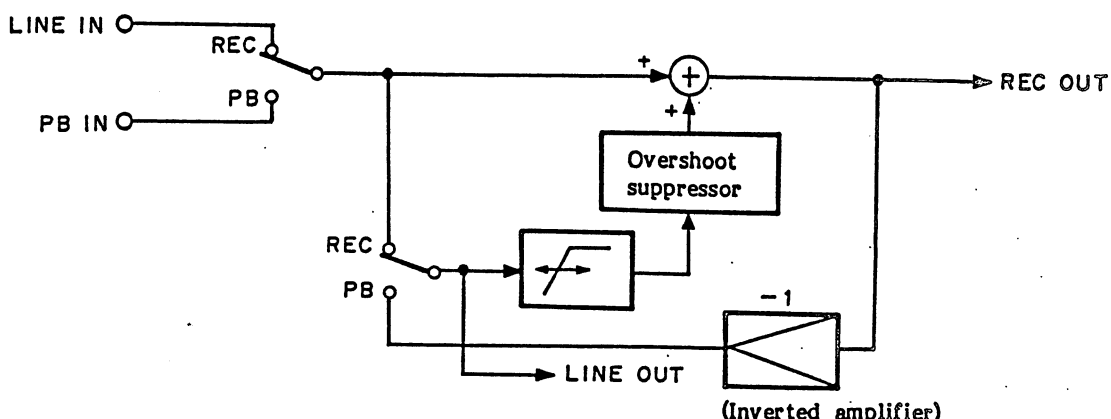

Fig. 8 B-Type IC Configuration

1-2. Dolby C-Type Noise Reduction

The C-type noise reduction improves the S/N ratio 10dB more than the B type. Therefore, two sliding band circuits are connected in serial for the following reasons:

(1) The optimum noise reduction in a one-stage sliding band circuit is 10dB so as to suppress the overshoot caused by transient signals.

(2) Common use of the B-type noise reduction hardware has advantages.

Fig. 9 shows the block diagram of the C-type noise reduction encoder.

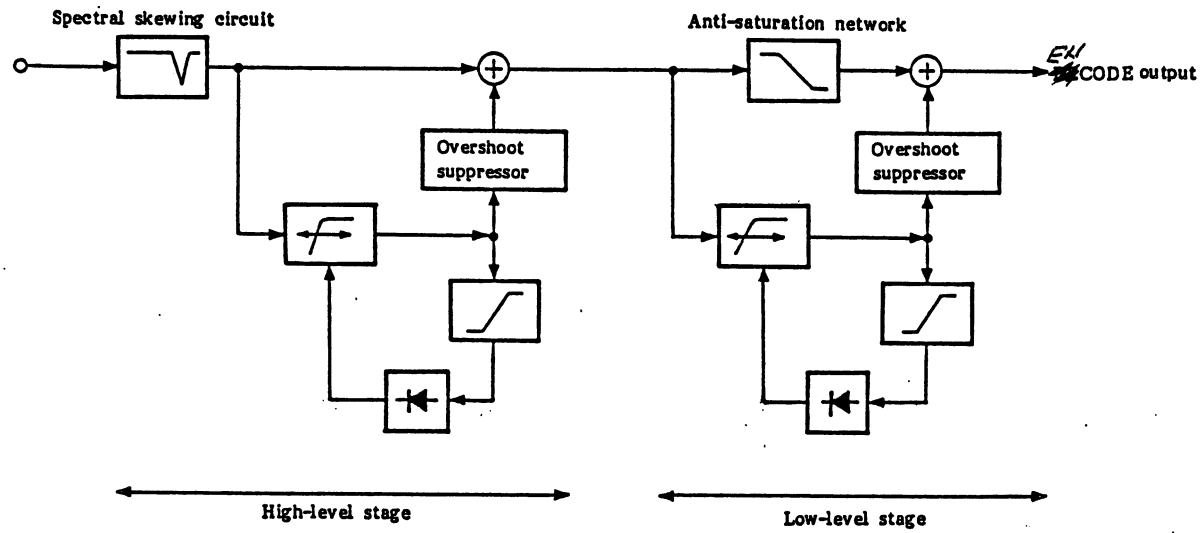

Fig. 9 C-Type Noise Reduction Encoder Block Diagram

The input signal is sent to the spectral skewing circuit, which has a resonance frequency of 20kHz and suppresses a 10kHz or more high-frequency signal component. The resultant signal is restored using a playback circuit. This process of transforming the high-frequency signal spectrum is called spectral skewing, and prevents both saturation in the high-frequency range and noise modulation caused by a 10kHz or more signal. Output from the spectral skewing circuit is fed to the high-level stage. This stage also consists of a main path and side chain as in B-type noise reduction. The side chain is a sliding band which increases the high-frequency range 10dB.

The output from the high-level stage is fed to the low-level stage. This stage has an anti-saturation network in the main path. When the signal level is low, the signal at the side chain is mainly used and provides a 10dB increase in the high-frequency range. The anti-saturation network is activated when the signal goes high and the variable filter cutoff frequency goes high. The maximum output level is improved by 4dB at 10kHz with tape Type 1, using the one-stage spectral skewing circuit and anti-saturation network.

The decoder block diagram is shown in Fig. 10. The decoder operation is opposite to that of the encoder.

The C-type noise reduction system can also be activated as a B type. Only the high-level stage is operated by by-passing the spectral skewing circuit and low-level stage. Depending on selection of B- or C-type noise reduction, the following is selected in the high-level stage.

(1) Variable filter characteristics
(2) Overshoot suppression limiter
(3) Smoothing time constant of control circuit

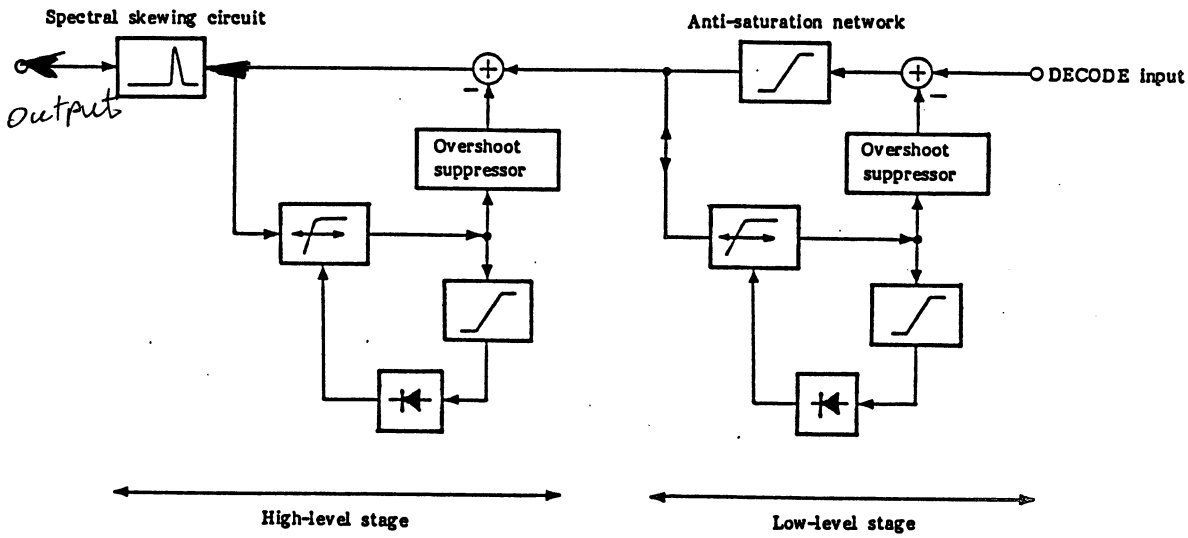

Fig. 10 C-Type Noise Reduction Decoder Block Diagram

The C-type noise reduction encoding characteristic is shown in Fig. 11. The S/N ratio is improved by 20dB (max.) at 100Hz or more. Spectral skewing is performed at 10kHz or more as shown in Fig. 9.

Fig. 12 shows the C-type compression characteristic. The compression ratio in C-type noise reduction is approximately 2 (max.) as in the B type because the low-level stage is crossed over the high-level stage. As a result, deviations in tape sensitivity or influences on frequency response are almost the same as those in the B type.

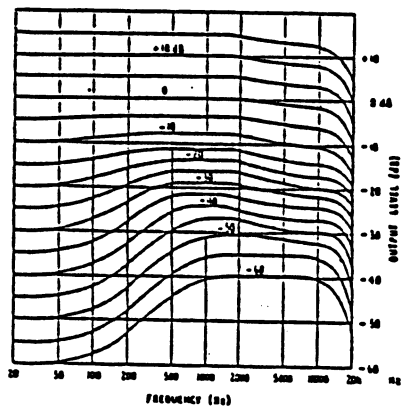

Fig. 11 C-Type Noise Reduction Encoding Characteristic

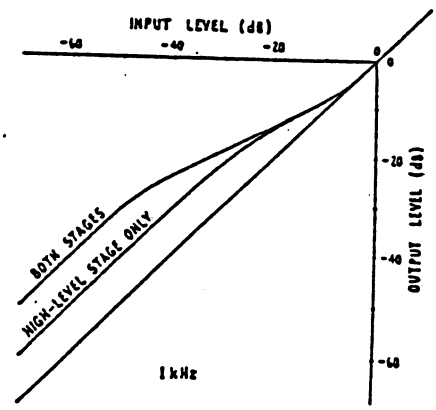

Fig. 12 C-Type Compression Characteristic

SECTION 11
TIME CODE

1. SMPTE TIME CODE

The SMPTE time code standard is based on the standard of the United States (C98.12: time and control code for video and audio tape for 525/30 television system). This standard standardizes the modulating systems, code formats, and recording tracks to obtain a timing and control code.

1-1. Modulating System

The modulating system is a self clock type width modulating system called a BI-PHASE MARK system or Manchester-II. As shown in Fig. 1-1, a clock transition occurs at the start of each bit period. When the bit is "1," a transition occurs at the center of the period; when it is "0," no transition occurs at the center of the period.

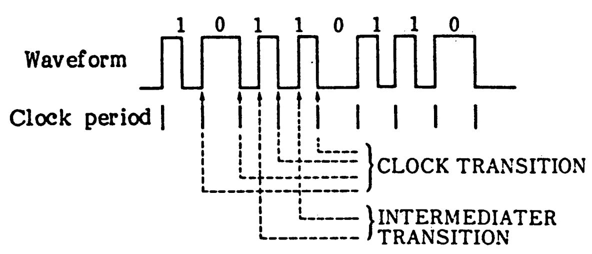

Fig. 1-1 BI-PHASE MARK Modulating System

1-2. Code Format

An address is assigned to each television frame. The frames are numbered 00 to 29; 00 to 23 are assigned to the hour digits and 00 to 59 are assigned to the minute and second digits. Each address is comprised of eighty bits (00 to 79) and has a value assigned as shown in Fig. 1-2.

The bit period is derived by dividing the frame period into eighty equal parts. Therefore, the frame data is continuous with the frame data before and after it. The first bit 0 of the frame data and last bit 79 of the preceding frame data share a clock transition as a boundary. The start point of this frame address, the leading edge of bit 0, is specified by the leading edge of the third wide vertical sync pulse of the video signal and has a permissible value of ± 1.

An address is represented in BCD; therefore x10 digits in which there is no need to express 0 to 9 can be represented in two or three bits. Fig. 1-3 shows the timing of the time code for a video signal. Figl 1-4 shows a waveform on the time code.

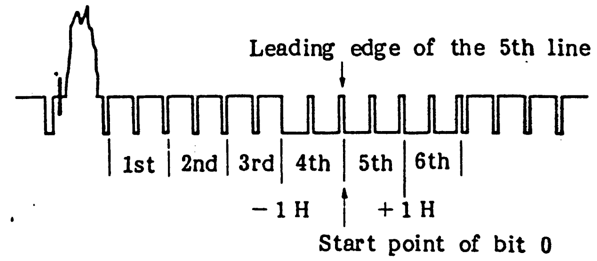

Fig. 1-3 Timing of Time Code

FUNCTION	BCD OR BIT	BIT NO
FRAMS UNITS	1, 2, 4, 8	0, 1, 2, 3
BINARY GROP No. 1		4, 5, 6, 7
FRMS TENS	1, 2	8, 9
DROP FRAM BIT		10
UNASSIGNED BIT (O)		11
BINARY GROP No. 2		12, 13, 14, 15
SECONDS UNITS	1, 2, 4, 8	16, 17, 18, 19
BINARY GROP No. 3		20, 21, 22, 23
SEC'S TENS	1, 2, 4	24, 25, 26
UNASSIGNED BIT (O)		27
BINARY GROP No. 4		28, 29, 30, 31
MINUTES UNITS	1, 2, 4, 8	32, 33, 34, 35
BINARY GROP No. 5		36, 37, 38, 39
MIN'S TENS	1, 2, 4	40, 41, 42
UNASSIGNED BIT(O)		43
BINARY GROP No. 6		44, 45, 46, 47
HOURS UNITS	1, 2, 4, 8	48, 49, 50, 51
BINARY GROP No. 7		52, 53, 54, 55
HOURS TENS	1, 2	56, 57
UNASSIGNED BIT(O)		58
UNASSIGNEDBIT(O)		59
BINARY GROP No. 8		60, 61, 62, 63
SYNCHRONIZING WORD (BINARY BIT)	0, 0, 1, 1, 1, 1, 1, 1, 1, 1, 1, 1, 1, 1, 0, 1	64, 65, 66, 67, 68, 69, 70, 71, 72, 73, 74, 75, 76, 77, 78, 79

Fig. 1-2 Frame Data Format

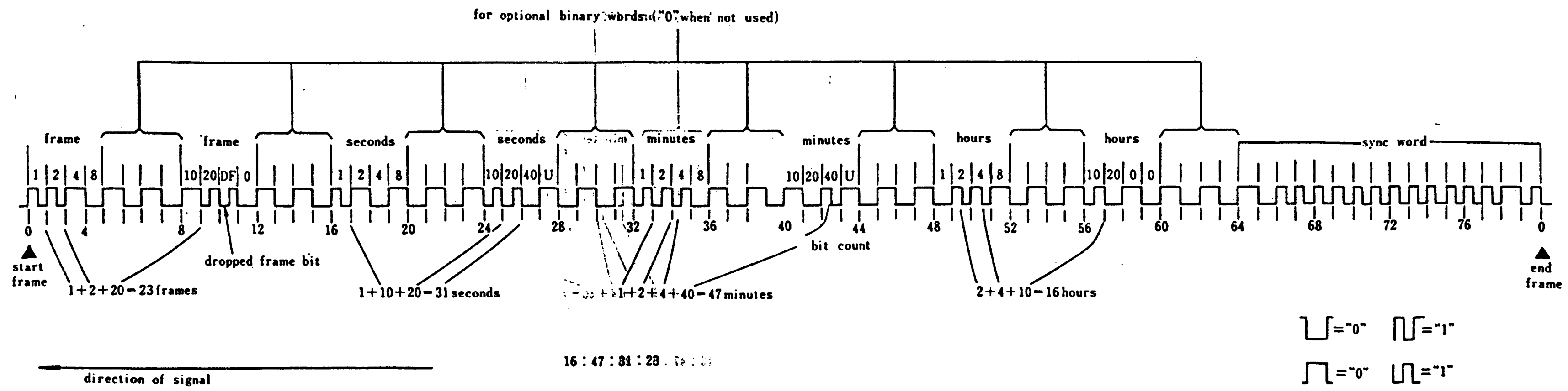

Fig. 1-4 Waveform of the Time Code

1-3. Deviation between the Reel Time and the Time Code

For a time code based on 24 hours, as is the NTSC color sync signal, the nominal number of frames is 29.97 frames/sec, so that the stopping timing of the time code deviates little by little from the real time. According to a simple calculation, this deviation equals +108 frames (3.6 seconds) per hour, which will eventually cause measurement problem. Two modes are specified as the standards for such a deviation.

(1) Correction mode: To solve the deviation between the color synch and the real time for a long duration (longer than a minute), two frame numbers (00, 01) are skipped from the start of each minute except 0, 10, 20, 30, 40, and 50 minutes. When using such a code system, bit number 10 is set to 1 as a correction mode or drop frame mode.

The skipping of the mode when drop frame bit 10 is 1 is shown below.

Example

H	M	S	F	
12	09	59	28	
12	09	59	29	Frames 00 and 01 are not skipped
12	10	00	00	since their timing is devisible by 10.
12	10	00	01	
12	10	00	02	
12	10	00	03	
		⋮		
12	10	59	28	
12	10	59	29	Frames 00 and 01 are skipped since
12	11	00	02	their timing is not divisible by 10.
12	11	00	03	
12	11	00	04	
12	11	00	05	

In the drop frame mode, as shown in Fig. 1-5, the difference between the synch timing and the real time can be suppressed for a long time with a maximum offset of 60 msec (1.8 frames). If the total time period is calculated for editing, there is no practical problem since the difference cannot be sensed.

(2) Uncorrected mode:

When corrective action is taken for the code system, and a method whereby the deviation from real time is taken into account is used, bit number 10 is set to 0 by regarding this method as a noncorrection mode, nondrop frame mode, or nonskip mode. In this case, the deviation is about 86 seconds per day.

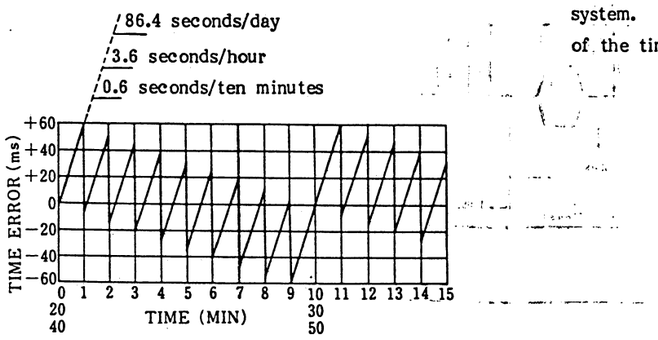

Fig. 1-5 Deviation of the Time Code from Real Time

1-4. Color Frame Bit

When there is a constant correlation between the code system and the provisional standard EIA-RS170-A (refer to the appendix IV), bit 11 is set to 1 as a color frame flag. This correlation denotes that when a frame is an even number, the frame coincides with the color frame A (fields I and II) and when a frame number is an odd number, the frame coincides with the color frame B (fields III and IV).

1-5. User's Bits

A total of 32 bits (4x8) of the binary group numbers 1 to 8 of Fig. 1-2 are separately called user's bits and are arbitrarily used by the user. As an extension of the time series, year, month, day, and week are inserted in these bits, and they are processed as a macro time code over 24 hours. A reel number or unique number of a tape or control command upon playback of a video tape as a CM material is inserted in those bits, or the user's bits are used to store character data. In this way, the user's bits are sometimes used as a individual system. In NHK, to verify the future use format of the time code, a closed system is being studied.

(1) The binary group of a time code generator which is provided for VTRs uses a calendar system in which year, month, and day are inserted.

(2) Cassette tapes for off-line editing are classified using a simple system in which the reel number (three digits) of a tape is inserted and a universal type in which the unique number (seven digits) of a tape is inserted. These values are superimposed into an image together with a time code as Tape Timer Index Superposer (TTIS).

(3) Data of the program code, number of times, scene number, cut number, retake, etc. are interposed on a specified program upon recording at a studio to improve editing efficiency.

Although several methods of using the binary groups as character data have been proposed, EBU has proposed a method whereby hour ASCII letters are assigned to one frame. The details of character data application are continuously being studied. To designate the binary group of the ASCII letters, the following combinations of bits 27 and 43 are defined.

	Bit 27	Bit 43
Unused or unique format	0	0
ASCII letter code	1	0
Undefined	0	1
Undefined	1	1

SP537 / Druck 246

1-8. EBU Time Code

The SMPTE time code was recommended in Publication 461 "Time and control code for video tape recordings" by IEC (International Electrotechnical Commission) in 1974 so that is commonly used even in the 625/25 PAL and SECAM television systems. Obviously, the standard of the 525/30 NTSC system is the same as the standard of the SMPTE time code, but the 625/25 system has a few differences. This code system is also called the EBU time code as opposed to the SMPTE time code.

First, since the fundamental portions such as the modulating system, constitution of 80 bits, and the like are all identical, there is no particular difference on the reading side. However, since the 625/25 system does not differ from real time in execution, a drop frame does not exist. Therefore, bit number 10 is an undefined bit. For 25 frames per second, the frame number for every second is an odd number, so that parity is not exchanged for every frame.

PAL		1	2	3	4
SECAM	Field parity	1	2	1	2
	Line number	24	336	24	336
	Color modulation signal	D_B'	D_B'	D_R'	D_R'

In PAL, the frame address having fields 1 and 2 locks an address generator so that the sum of a frame value (bit number 0) and a second value (bit number 16) becomes an odd number; likewise, the frame address having fields 3 and 4 locks the address generator so that the sum of a frame value and a second value becomes as even number.

In SECAM, the frame address which starts from the line of which the second field is color-modulated by D_B' is specified so that the sum of a frame value and a second value beomes an odd number; similarly, the frame address starting from the line of which the second field is color-modulated by D_R' is specified so that the sum of a frame value and a second value becomes an even number.

The EBU time code can be edited in the same manner excluding a slight difference in that the lead time of the waveform is 50 +15/-20 usec.

2. The time code for the vertical blanking interval: VITC

VTR of the nonsegment helical scanning system, in which a video image can be seen even in the still or high-speed running modes, has much better operating efficiency during editing.

A major editing advantage in that the time code can be read even in the still or slow-motion mode. For this purpose, it is possible to consider a method in which the time code is encoded and interposed in the vertical blanking interval. The Vertical Interval Time Code (VITC) proposed by Sony Corporation, as shown in Fig. 2-1, has 90 bits which are constituted such that 64 bits of data of the SMPTE time code are divided on an 8-bit unit basis for 1H interval and the sync bits and CRC code of eight bits are added to these bits. This VITC is interposed to 12 and 14H of each field. By repeatedly interposing four time codes in one frame, the influences of signal dropout and noise band in the still mode are minimized. Bit number 35 is used to discriminate the even and odd fields.

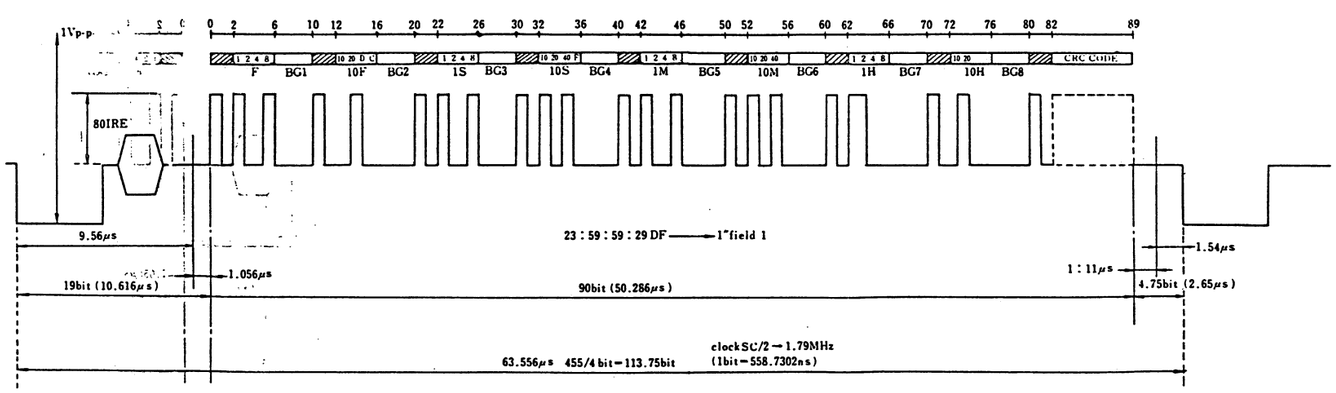

0-1	Sync bit	22-25	Second 1st digit	42-45	Minute 1st digit	70-71	Sync bit
2-5	Frame 1st digit	26-29	Users bit 3	46-49	Users bit 5	72-73	Hour 10th digit
6-9	Users bit 1	30-31	Sync bit	50-51	Sync bit	74-75	"0"
10-11	Sync bit	32-34	Second 10th digit	52-54	Minute 10th digit	76-79	Users bit 8
12-13	Frame 10th digit	35	Field mark	55	"0"	80-81	Sync bit
14	Drop frame display		"0": 1st and 3rd fields	56-59	Users bit 6	82-89	CRC code
15	Reserved as color frame ID		"1": 2nd and 4th fields	60-61	Sync bit		(Cyclic Redundancy Check code)
16-19	Users bit 2	36-39	Users bit 4	62-65	Hour 1st digit		
20-21	Sync bit	40-41	Sync bit	66-69	Users bit 7		

Fig. 2-1 VITC Signal of Sony's BVG-1000

SP537 / Druck 247

Fig. 2-2 shows the correspondence between VITC and TC.

0-1 Sync bits, 2-5 Location of 1 of the frame, 6-9 User's bits 1, 10-11 Sync bits, 12-13 Location of 10 of the frame, 14 Indication of the dropped frame, 15 Reservation as a color frame ID. 16-19 User's bits 2, 20-21 Sync bits, 22-25 Location of the 1's digit for seconds, 26-29 User's bits 3, 30-31 Sync bits, 32-34 Location of the 10's digit for seconds, 35 Field mark, ("0"... 1st and 3rd fields, "1"... 2nd and 4th fields) 36-39 User's bits 4, 40-41 Sync bits, 42-45 Location of the 1's digit for minutes, 46-49 User's bits 5, 50-51 Sync bits, 52-54 Location of the 10's digits for minutes, 55 "0" zero, 56-59 User's bits 6, 60-61 Sync bits, 62-65 Location of the 1's digit for hours, 66-69 User's bits 7, 70-71 Sync bits, 72-73 location of the 10's digit for hours, 74-75 "0" zero, 76-69 User's bits 8, 80-81 Sync bits, 82-89 CRC code, (Cyclic Redundancy Check Code)

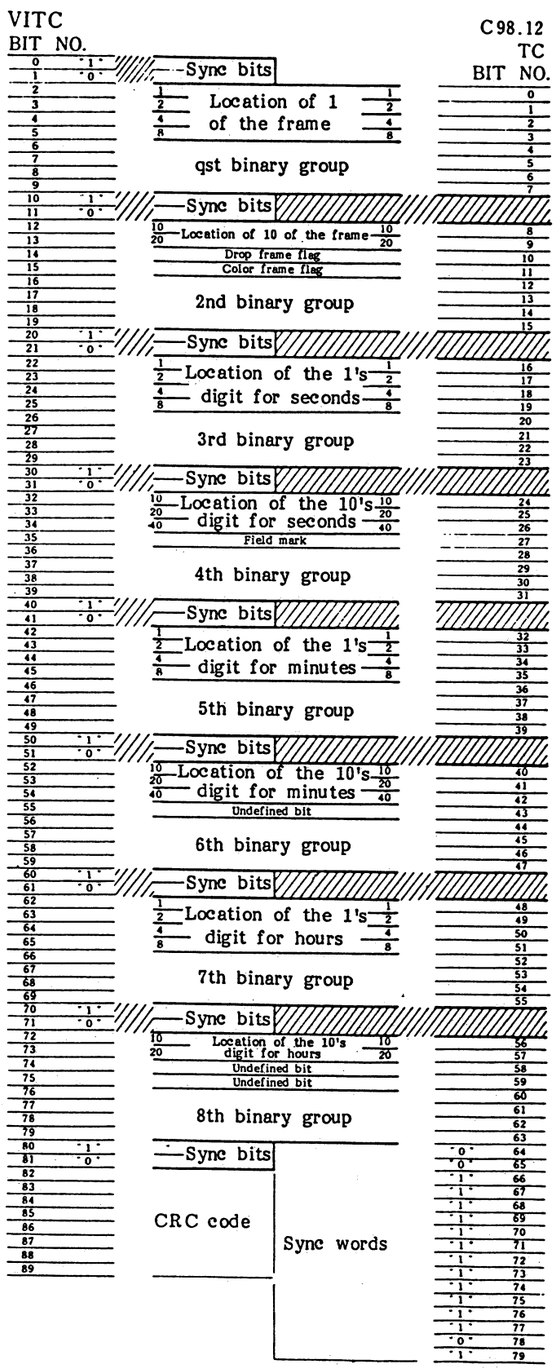

Fig. 2-2 Correspondence between VITC and TC

2-1. Modulating System

(1) The modulating system has a signal format based on the binary notation in which a transition occurs only when a change in data occurs in the adjacent bit cells. When the adjacent data are the same, no transition occurs (modified NRZ). A pair of sync bits are interposed before the 8-bit unit.

(2) The bit ratio and the reference frequency Fc of an address are specified as follows:

$$Fc = Fh \times 455/4$$

where Fh is a horizontal line ratio ± 0.5 Hz (1/2 of the subcarrier frequency).

2-2. Code Format

The value of each bit of the code format is based on the time code, and the corresponding expression is used except the sync bits and a part of a flag.

(1) A frame has values of 0 to 29 and is interposed with fields at four fields/frame which are classified by the EIA-RS170-A. The address interposed to 1H comprises 90 bits (0 to 89).

(2) Boundary of an address: Starts in response to the leading edge of the first sync bit (bit number 0); 90 bits are provided for the nominal interval of 50.286 usec.

(3) The start timing of an address starts from a point within a range of 9.56 to 10.616 usec from the leading edge of the horizontal sync pulse.

(4) In addition to the drop frame flag (bit number 14) and the color frame flag (bit number 15), a field mark flag (bit number 35) is added. When the bit value is 0, it corresponds to the color fields 1 and 3. When the bit value is 1, it corresponds to color fields 2 and 4. The color fields are specified by the EIA standard RS-170-A (refer to appendix IV).

(5) The Cyclic Redundancy Check Code (CRC) of eight bits is added to bit numbers 82 to 89. The CRC code detecs erros when the reliability of the code interposed in 1H is suspected due to waveform distortion, dropout of a signal, etc.

The cyclic redundancy check code G(X) is generated according to the following equation.

$$G(X) = X^8 + 1$$

(6) The sync bits are added as "10" to the positions before each unit time bit, the head of each set consisting of four bits, and another four bits indicating the binary group and the CRC code.

SP537 / Druck 248

SECTION 12
ϕ^2 SERVO SYSTEM

ϕ^2 SERVO CONTROL SYSTEM

The VTR phase servo control system is usually called the ϕ^2 servo control system. The phase is indicated by ϕ, and ϕ^2 implies that there is a minor ϕ servo control loop within the major ϕ servo control system. The ϕ^2 servo control system is also called the P^2 servo control system.

Fig. 1 shows the block diagram of the ϕ^2 servo control loop which is composed of a ϕ servo control loop and a conventional speed/phase servo control loop.

Necessity for the ϕ^2 Servo Control System

The drum servo control system compares the PG signal, which represents the video head location, with the reference video signal input to the machine to control the phase of the video head on the tape. However, this type of feedback system cannot completely compensate for the performance change due to temperature dependence, aging, and parts replacement. This causes the vertical sync phase in the video signal to be different from the servo control signal phase (i.e., T1 in Fig. 2 is set at different values).

When tape is edited by a variety of T1, horizontal flagging can occur at the editing point (IN point).

If the switching phase of the video signal recorded on the tape is displaced by 0.5H due to aging, a 0.5H discontinuity in the video signal can occur at the IN point. Shifting in the horizontal scan timing can be observed on the picture monitor. This type of phase shift is called horizontal flagging.

The solution to the above problem will be described below.

If the vertical sync of the PB video signal and that of the video signal to be edited are in phase, discontinuity in the horizontal sync signal cannot occur. This type of system is called the ϕ servo control system. During playback, the ϕ servo control system is used to cause the vertical sync phase of the PB video signal to coincide with that of the video signal to be edited. The locking of the vertical sync to the input signal on the monitor cannot go out of phase at the IN point of editing.

If the VO series tape runs on the BVU series machine for the NTSC system, the vertical blanking pulse cannot change even if a window-over has occurred in the TBC.

During recording, the ϕ^2 servo control system causes the input video signal phase to coincide with the PG signal phase (representing the location of the video head). Change of the switching position due to aging or temperature dependence can be corrected by the ϕ^2 servo control system.

Let us consider the operation of the ϕ^2 servo control system.

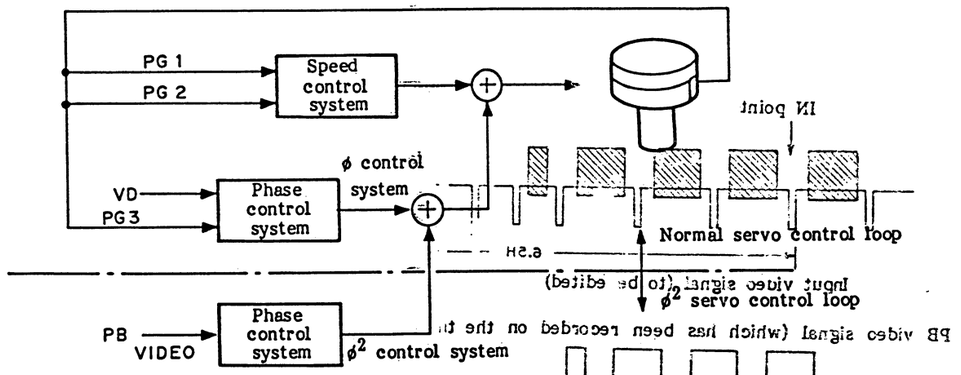

Fig. 1 Block Diagram of Drum Servo Control System

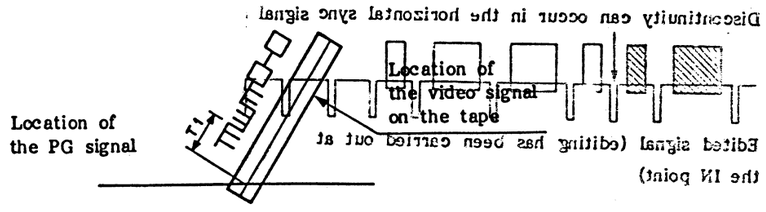

Fig. 2 Location of Signals on Tape

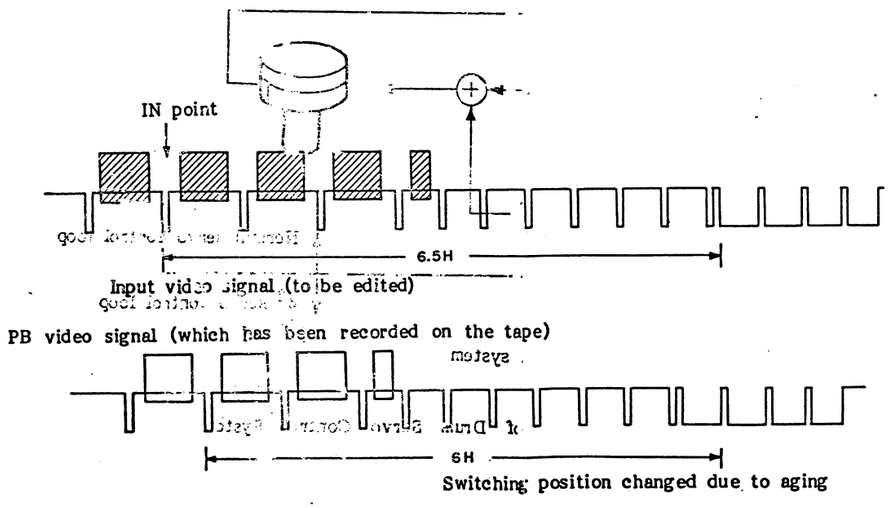

Fig. 3 Discontinuity in the Video Signal at the Editing Point

SP537 / Druck 249

Fig. 4 shows the tape pattern obtained during assemble editing.

The ϕ^2 servo control system sets the phase difference between the vertical syncs of the PB video signal (black in Fig. 4) and the video signal to be recorded (white in Fig. 4) to zero. Discontinuity cannot occur in the horizontal period of the video signal at IN point, and thus no disturbance can occur in the video signal. During recording, the video signals are recorded on the tape after the IN point by using the ϕ^2 servo control system. Thus, the phase of the video signal is held unchanged by the ϕ^2 servo control system.

Fig. 5 shows the tape pattern during insert editing. During playback, the ϕ^2 servo control system sets the phase difference between the vertical syncs of the input video signal and the PB video signal to zero. During recording, the phase information obtained by the ϕ^2 servo control system is stored to accomplish the ϕ^2 servo control loop. This operation is almost the same as that during assemble editing.

Operation of the ϕ^2 servo control system in the type V machine, which is described above, is listed in Table 1. The table indicates that some differences are found in editing.

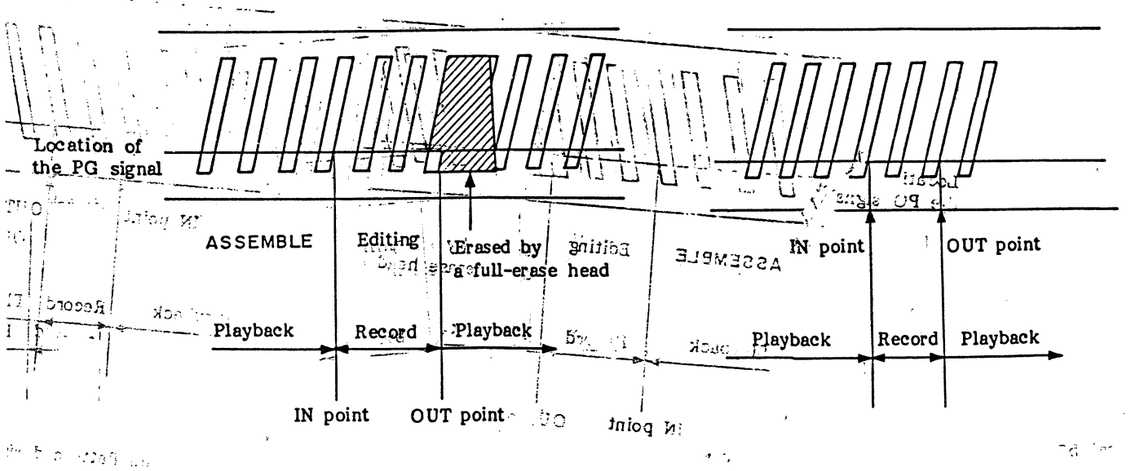

Fig. 4

Fig. 5 Tape Pattern during Insert Editing

During normal playback, the ϕ^2 servo control system sets the phase difference between the vertical syncs of the input video signal and PB video signal to zero.

During normal recording, the ϕ^2 servo control system sets the phase difference between the PG signal and the vertical sync of the input video signal to 6.5H.

Table 1

Assemble editing		Insert editing	
PB	REC	PB	REC
Sets the phase of the vertical sync in the PB video signal to that in the input video signal.	Sets the phase of the vertical sync in the video signal to be recorded at the switched position on the VTR by adjustment.	Sets the phase of the vertical sync in the PB video signal to that in the input video signal.	Held in the phase which has been set during playback operations.